US Army Corps of Engineers®
SACRAMENTO DISTRICT

Mead & Hunt, Inc.

AMERICAN RIVER COMMON FEATURES
NATOMAS BASIN REACH B VOLUME 4
RIVERSIDE CANAL PHASE 2 RELOCATION PROJECT
SACRAMENTO COUNTY, CALIFORNIA



VICINITY MAP
NOT TO SCALE

DESIGN FILE NO. 1-04-0642
SPEC NO. 2122

REGISTERED PROFESSIONAL ENGINEER
CHRISTOPHER L. STEPPER
C68617
Exp. SEP. 30, 2019
CIVIL
STATE OF CALIFORNIA

DATE SIGNED: 5/29/19
RESPONSIBLE FOR G, C, CG, AND M SHEETS

REGISTERED PROFESSIONAL ENGINEER
GRACE F. ROSE
C68413
Exp. 3-31-2020
CIVIL
STATE OF CALIFORNIA
5/29/19

RESPONSIBLE FOR S SHEETS

REGISTERED PROFESSIONAL ENGINEER
LONDON W. WINGFIELD
E 20920
EXP. SEP 2020
ELECTRICAL
STATE OF CALIFORNIA

DATE SIGNED: 5/29/19
RESPONSIBLE FOR E AND I SHEETS

US Army Corps of Engineers®

MARK	DESCRIPTION	DATE

DESIGNED BY: C. STEPPER
DRAWN BY: E. DIOCSON
CHECKED BY: S. SULLIVAN
SUBMITTED BY: J. KASHIWADA
ISSUE DATE: 05/29/2019
SOLICITATION NO.:
CONTRACT NO.:
FILE NO: 1-04-0642
FILE NAME: G-001.dwg
SIZE: ANSI D
SPEC NO: 2122

U.S. ARMY CORPS OF ENGINEERS
SACRAMENTO DISTRICT

MEAD & HUNT, INC.
180 PROMENADE CIRCLE, SUITE 240
SACRAMENTO, CA 95834

AMERICAN RIVER COMMON FEATURES
NATOMAS BASIN REACH B
RIVERSIDE CANAL PHASE 2 RELOCATION PROJECT

COVER SHEET

SHEET ID
G-001

X:\1941500\161390.01\TECH\CAD\Riverside Canal\G-001.dwg

FINAL ISSUE FOR BID



PROJECT MAP

0 1760 3520 1 MILE

SCALE IN FEET

(APPROXIMATE - MAP IS SCHEMATIC)

SHEET INDEX

SHEET NUMBER	SHEET TITLE
GENERAL	
G-001	COVER SHEET
G-002	PROJECT LOCATION MAP AND DRAWING LIST
G-003	PROJECT MAP
G-004	NOTES AND ABBREVIATIONS
G-005	LEGEND AND LIST OF CONTACTS
CIVIL	
C-001	DEMOLITION STA 143+00 TO STA 153+00
C-002	DEMOLITION STA 173+00 TO STA 182+00
C-003	DEMOLITION STA 194+00 TO STA 203+00
C-004	DEMOLITION STA 233+00 TO STA 238+00
C-005	DEMOLITION STA 245+00 TO STA 251+00
C-006	DEMOLITION STA 261+00 TO STA 267+00
C-007	DEMOLITION STA 282+00 TO STA 290+00
C-008	DEMOLITION AND TREE INVENTORY STA 294+00 TO STA 300+00
C-101	TYPICAL SECTIONS
C-102	TYPICAL SECTIONS
C-201	CONTROL ALIGNMENTS
C-202	CONTROL ALIGNMENTS
C-301	RIVERSIDE OUTFALL PIPE
C-302	RIVERSIDE BASELINE PLAN AND PROFILE STA 143+00 TO 153+00
C-303	RIVERSIDE BASELINE PLAN AND PROFILE STA 153+00 TO 163+00
C-304	RIVERSIDE BASELINE PLAN AND PROFILE STA 163+00 TO 173+00
C-305	RIVERSIDE BASELINE PLAN AND PROFILE STA 173+00 TO 183+00
C-306	RIVERSIDE BASELINE PLAN AND PROFILE STA 183+00 TO 193+00
C-307	RIVERSIDE BASELINE PLAN AND PROFILE STA 193+00 TO 203+00
C-308	RIVERSIDE BASELINE PLAN AND PROFILE STA 203+00 TO 213+00
C-309	RIVERSIDE BASELINE PLAN AND PROFILE STA 213+00 TO 223+00
C-310	RIVERSIDE BASELINE PLAN AND PROFILE STA 223+00 TO 233+00
C-311	RIVERSIDE BASELINE PLAN AND PROFILE STA 233+00 TO 243+00
C-312	RIVERSIDE BASELINE PLAN AND PROFILE STA 243+00 TO 253+00
C-313	RIVERSIDE BASELINE PLAN AND PROFILE STA 253+00 TO 262+00
C-314	RIVERSIDE BASELINE PLAN AND PROFILE STA 262+00 TO 272+00
C-315	RIVERSIDE BASELINE PLAN AND PROFILE STA 272+00 TO 282+00
C-316	RIVERSIDE BASELINE PLAN AND PROFILE STA 282+00 TO 292+00
C-317	RIVERSIDE BASELINE PLAN AND PROFILE STA 292+00 TO 303+19.56
C-320	LATERAL 12 BASELINE PLAN AND PROFILE STA 0+00 TO 5+00
C-321	LATERAL 12 BASELINE PLAN AND PROFILE STA 5+00 TO 10+00
C-322	FARM ROAD LATERAL TURNOUT PLAN AND PROFILE STA 0+00 TO 6+46.86
C-330	RADIO ROAD AND SAN JUAN ROAD PIPE CROSSINGS
C-331	FARM ROAD AND LATERAL 12 PIPE CROSSINGS
C-332	BRYTE BEND ROAD AND PARKER ROAD PIPE CROSSINGS
C-333	PARKER ROAD BASELINE PLAN AND PROFILE 10+00 TO 16+00
C-401	CANAL TURNOUT PLAN AND PROFILE
C-402	TURNOUTS TO LATERAL AND TYPICAL CULVERT DETAIL
C-403	IRRIGATION IMPROVEMENTS AND WATER SUPPLY
C-404	COMMON CIVIL DETAILS
C-405	TYPICAL FENCE DETAILS
C-501	LIFT STATION PLAN, SECTION AND DETAIL
C-502	RIVERSIDE OUTFALL PIPE DISCHARGE STRUCTURE
C-503	CONCRETE RECTANGULAR WEIR
CIVIL GRADING	
CG-101	DIRT ROAD CROSSING GRADING PLAN
CG-102	NOT USED
CG-103	LIFT STATION GRADING PLAN
CG-104	FARM ROAD GRADING PLAN
CG-105	FARM ROAD GRADING PLAN
CG-106	PIPELINE ACCESS ROAD GRADING PLAN
CG-107	PARKER ROAD GRADING PLAN
CG-108	BRYTE BEND ROAD GRADING PLAN
CG-109	TREE ROAD GRADING PLAN
STRUCTURAL	
S-001	STRUCTURAL NOTES AND ABBREVIATIONS
S-002	SPECIAL INSPECTION NOTES
S-101	LIFT STATION STRUCTURAL PLANS AND SECTIONS
S-102	PUMPING PLANT OUTFALL STRUCTURAL PLANS AND SECTIONS
S-103	WEIR WALL DETAILS
S-104	DISCHARGE BOX STRUCTURAL PLANS AND SECTIONS
S-501	TYPICAL STRUCTURAL DETAILS
S-502	STRUCTURAL SUPPORT DETAILS
S-503	MISCELLANEOUS STRUCTURAL DETAILS
S-504	MISCELLANEOUS STRUCTURAL DETAILS
MECHANICAL	
M-101	LIFT STATION PLAN
M-102	FIELD IRRIGATION TURNOUTS
M-103	RANCHETTE IRRIGATION TURNOUTS
M-104	TYPICAL DETAILS
M-105	WELL DISCHARGE PLAN
ELECTRICAL	
E-001	ELECTRICAL SYMBOLS
E-010	SINGLE LINE DIAGRAM
E-020	LIFT STATION MCC ELEVATION
E-101	LIFT STATION
E-102	ENLARGED PLAN
E-301	CONTROL DIAGRAM LIFT STATION
E-501	TYPICAL DETAILS
E-502	TYPICAL DETAILS
E-601	LIFT STATION RTU BLOCK DIAGRAM
E-602	LIFT STATION RTU POWER DISTRIBUTION
E-603	LIFT STATION PLC IO 1
E-604	LIFT STATION PLC IO 2
I-001	PROCESS AND INSTRUMENTATION SYMBOLS AND ABBREVIATIONS
I-002	PROCESS AND INSTRUMENTATION LIFT STATION

US Army Corps of Engineers®

MARK	DESCRIPTION	DATE

ISSUE DATE: 05/09/2019
SOLICITATION NO.:
CONTRACT NO.:
FILE NO: 1-04-0642
FILE NAME: G-002.dwg

DESIGNED BY: C. STEPPER
DRAWN BY: E. DIOCSON
CHECKED BY: S. SULLIVAN
SUBMITTED BY: J. KASHIWADA
SIZE: ANSI D
SPEC NO.: 2122

U.S. ARMY CORPS OF ENGINEERS
SACRAMENTO DISTRICT

MEAD & HUNT, INC.
180 PROMENADE CIRCLE, SUITE 240
SACRAMENTO, CA 95834

AMERICAN RIVER COMMON FEATURES
NATOMAS BASIN REACH B
RIVERSIDE CANAL PHASE 2 RELOCATION PROJECT

PROJECT LOCATION MAP AND DRAWING LIST

SHEET ID

G-002

X:\1941500\161390.01\TECH\CAD\Riverside Canal\G-002.dwg

FINAL ISSUE FOR BID

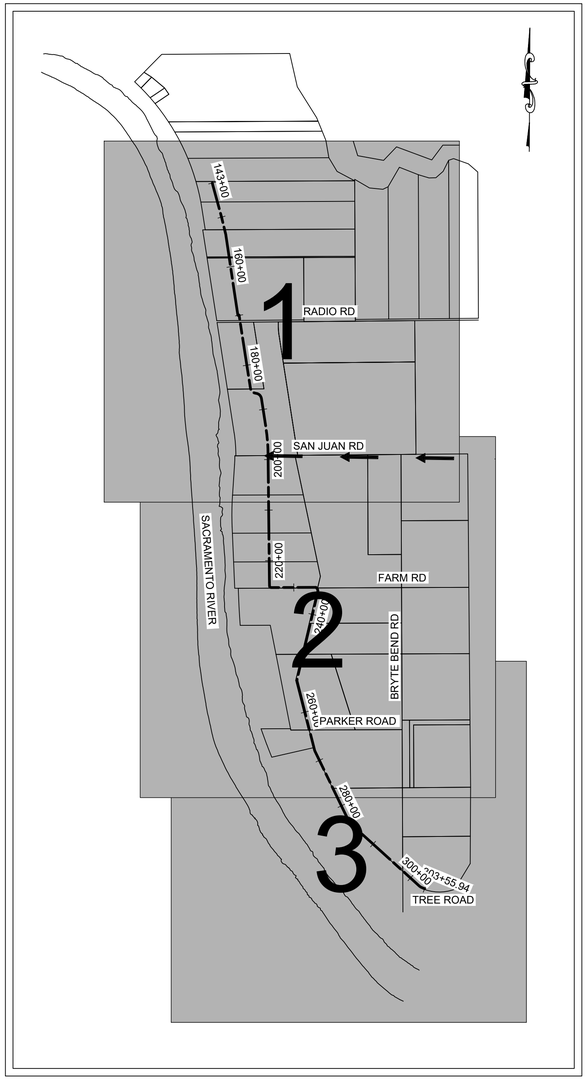

PROJECT MAP

SCALE: 1" = 1500'

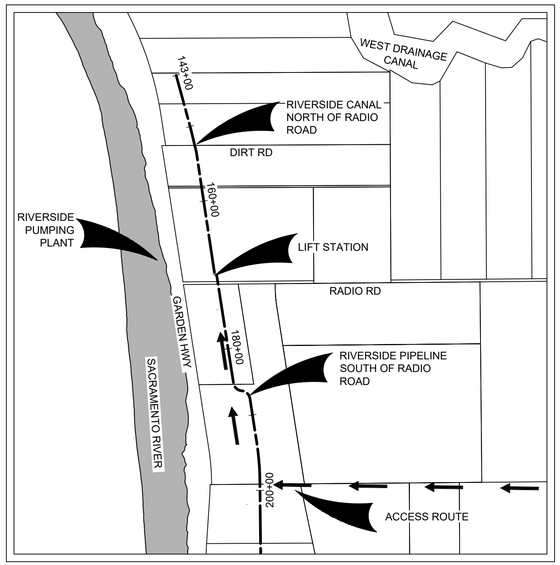

PROJECT MAP 1

SCALE: 1" = 1000'

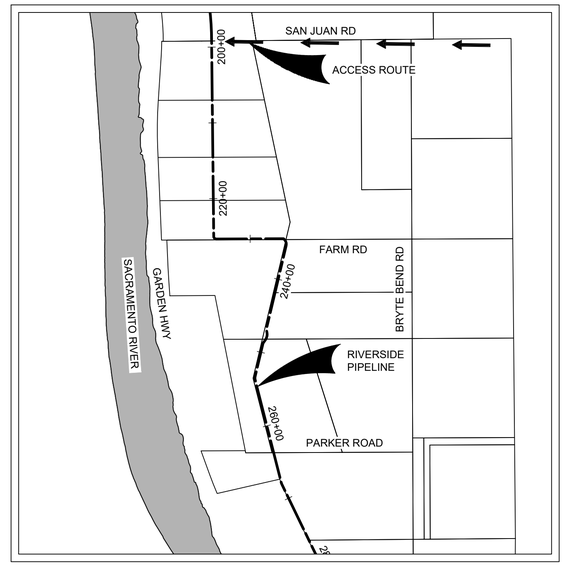

PROJECT MAP 2

SCALE: 1" = 1000'

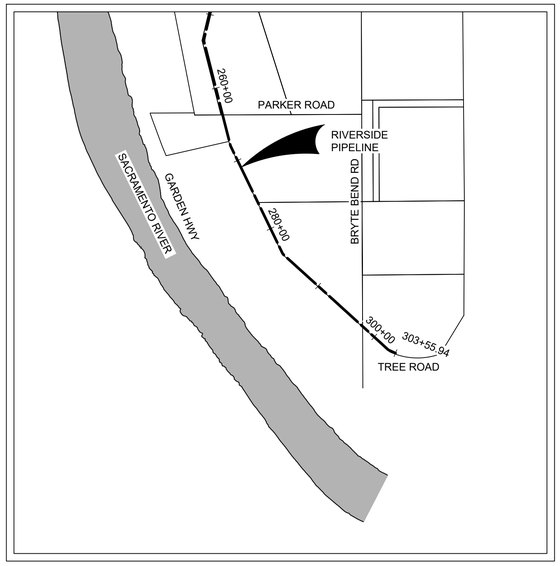

PROJECT MAP 3

SCALE: 1" = 1000'

US Army Corps of Engineers®

MARK	DESCRIPTION	DATE

DESIGNED BY: C. STEPPER
DRAWN BY: E. DIOCSON
CHECKED BY: S. SULLIVAN
SUBMITTED BY: J. KASHIWADA
SIZE: ANSI D
ISSUE DATE: 05/06/2019
SOLICITATION NO.:
CONTRACT NO.:
FILE NO: 1-04-0642
FILE NAME: G-003.dwg
SPEC NO. 21222

U.S. ARMY CORPS OF ENGINEERS
SACRAMENTO DISTRICT

MEAD & HUNT, INC.
180 PROMENADE CIRCLE, SUITE 240
SACRAMENTO, CA 95834

AMERICAN RIVER COMMON FEATURES
NATOMAS BASIN REACH B
RIVERSIDE CANAL PHASE 2 RELOCATION PROJECT

PROJECT MAP

SHEET ID

G-003

X:\19941500\161390.01\TECH\CAD\Riverside Canal\G-003.dwg

FINAL ISSUE FOR BID

GENERAL NOTES

1. ALL MATERIALS AND WORKMANSHIP SHALL CONFORM TO THE THESE DRAWINGS, GENERAL NOTES, AND TECHNICAL PROVISIONS, AS WELL AS THE CONSTRUCTION SPECIFICATIONS FOR THIS PROJECT PRESENTED IN BOOK FORM.
2. THE CONTRACTOR SHALL BE RESPONSIBLE FOR MAINTAINING RECORD DRAWINGS FOR ALL WORK THROUGHOUT THE COURSE OF CONSTRUCTION. SUCH DRAWINGS SHALL RECORD THE LOCATION AND AS-BUILT CONDITION OF ALL PROJECT ELEMENTS. COPIES SHALL BE DELIVERED TO THE CONTRACTING OFFICER PRIOR TO THE ACCEPTANCE OF THE WORK AS INDICATED IN THE SPECIFICATIONS
3. THE CONTRACTOR SHALL EXAMINE THE DOCUMENTS AND SHALL NOTIFY THE CONTRACTING OFFICER OF ANY DISCREPANCIES WHICH MAY BE FOUND PRIOR TO THE START OF WORK.
4. DETAILS MARKED "TYPICAL" SHALL APPLY IN ALL CASES, UNLESS NOTED OTHERWISE.
5. FOR CONDITIONS DEVIATING FROM THE TYPICAL AND NOT SPECIFICALLY DETAILED IN THE PLANS, THE CONTRACTOR SHALL VERIFY CONSTRUCTION DETAILS WITH THE CONTRACTING OFFICER.
6. DETAILS AND DIMENSIONS OF EXISTING CONDITIONS AS SHOWN ON THESE DRAWINGS ARE FOR REFERENCE ONLY. THE CONTRACTOR SHALL FIELD VERIFY AND RESOLVE ANY CONFLICTS WITH THE CONTRACTING OFFICER.
7. THE CONTRACTOR SHALL BE RESPONSIBLE FOR COORDINATING THE WORK OF ALL TRADES AND SUBCONTRACTORS UNDER THE CONTRACTOR'S JURISDICTION.
8. THE ALIGNMENT SHOWN ON THE DRAWINGS IS THE CONSTRUCTION REFERENCE LINE FOR THE PROJECT FACILITIES SHOWN. THE CONTRACTOR SHALL ESTABLISH THE BASELINE AND ANY OFFSETS REQUIRED UTILIZING THE MONUMENTS PROVIDED.
9. THE CONTRACTOR IS RESPONSIBLE FOR THE PROTECTION OF ALL EXISTING MONUMENTS AND OTHER SURVEY MARKERS. MONUMENTS AND SURVEY MARKERS DESTROYED DURING CONSTRUCTION SHALL BE REPLACED BY A LICENSED LAND SURVEYOR AT THE CONTRACTOR'S EXPENSE. CONTRACTOR SHALL PROVIDE CONTRACTING OFFICER WITH AT LEAST 48 HOURS ADVANCE NOTICE PRIOR TO REPLACEMENT.
10. THE CONTRACTOR SHALL BE RESPONSIBLE FOR COMPLIANCE WITH ALL FEDERAL, STATE AND LOCAL LAWS, RULES AND REGULATIONS APPLICABLE TO ALL WORK PERFORMED UNDER THE CONTRACT.
11. THE CONTRACTOR SHALL BE IN RECEIPT OF COUNTY-APPROVED PLANS PRIOR TO BEGINNING CONSTRUCTION WITHIN ANY COUNTY RIGHT-OF-WAY.
12. THE CONTRACTOR SHALL COMPLY WITH THE PROVISIONS OF THE CORPS OF ENGINEERS SAFETY & HEALTH MANUAL (EM 385-1-1).
13. INFORMATION CONTAINED WITHIN THESE DOCUMENTS SHALL NOT BE CONSTRUED TO PERMIT WORK NOT CONFORMING TO THE REFERENCED CODES.
14. FOR ALL TRENCH EXCAVATIONS THAT ARE FIVE FEET OR MORE IN DEPTH, THE CONTRACTOR SHALL OBTAIN A PERMIT FROM THE DIVISION OF INDUSTRIAL SAFETY. PRIOR TO BEGINNING ANY EXCAVATION, A COPY OF THIS PERMIT SHALL BE MADE AVAILABLE AND BE LOCATED ON THE CONSTRUCTION SITE AT ALL TIMES.
15. THE CONTRACTOR SHALL PROVIDE EROSION, SEDIMENT, AND WATER POLLUTION CONTROL MEASURES IN ACCORDANCE WITH THE APPROVED STORM WATER POLLUTION PREVENTION PLAN (SWPPP).
16. DUST CONTROL, EROSION CONTROL, AND SEDIMENT CONTROL MEASURES, INCLUDING STREET CLEANING AT WORK AREA ENTRANCES SHALL BE CONTINUOUSLY MAINTAINED.
17. THE CONTRACTOR SHALL MAINTAIN AND OPERATE CONSTRUCTION EQUIPMENT TO MINIMIZE EXHAUST EMISSIONS. DURING CONSTRUCTION, TRUCKS AND EQUIPMENT SHALL BE OPERATED ONLY WHEN NECESSARY AND ENGINES SHALL BE SHUT OFF WHEN TRUCKS ARE BEING LOADED, UNLOADED OR ARE OTHERWISE STATIONARY FOR A PERIOD OF MORE THAN 10 MINUTES. EQUIPMENT SHALL BE MAINTAINED IN GOOD CONDITION AND WELL TUNED TO MINIMIZE EXHAUST EMISSIONS.
18. THE CONTRACTOR SHALL CONDUCT OPERATIONS OUTSIDE OF AREAS TO BE PRESERVED OR PROTECTED ACCORDING TO THE PLANS.
19. THE CONTRACTOR SHALL PREPARE A TRAFFIC CONTROL PLAN DESCRIBING METHODS TO SAFELY CONTROL TRAFFIC ON PUBLIC ROADWAYS IN AND AROUND THE SITE.
20. THE CONTRACTOR SHALL BE SOLELY AND COMPLETELY RESPONSIBLE FOR FURNISHING AND MAINTAINING ALL WARNING SIGNS, DEVICES, AND FEATURES NECESSARY TO PROTECT THE HEALTH AND SAFETY OF THE GENERAL PUBLIC AND WORKERS AND TO PROVIDE FOR THE PROPER AND SAFE ROUTING OF VEHICULAR AND PEDESTRIAN TRAFFIC DURING THE PERFORMANCE OF THE WORK.
21. THE GARDEN HIGHWAY SHALL REMAIN ACCESSIBLE AT ALL TIMES TO MAINTAIN ACCESS FOR RESIDENTS, LANDOWNERS, AND EMERGENCY VEHICLES. CONTRACTOR SHALL PROVIDE TEMPORARY ROADWAY, PLATING, SIGNALS, SIGNING AND BRIDGING TO MAINTAIN ACCESS. ACCESS TO WATERSIDE PARCELS SHALL BE MAINTAINED AT ALL TIMES. ACCESS TO THE LANDSIDE PARCELS MAY BE INTERRUPTED DURING CERTAIN CONSTRUCTION ACTIVITIES. HOWEVER, REASONABLE ACCESS SHALL BE MAINTAINED. ACCESS RAMPS TO LANDSIDE PARCELS SHALL BE RELOCATED PER THE DRAWINGS.
22. EXISTING FENCING AND GATES WITHIN THE RIGHT-OF-WAY SHALL BE REMOVED AS REQUIRED FOR CONSTRUCTION AND AS SPECIFIED ON THE DRAWINGS. SALVAGE OF FENCING ITEMS SHALL BE IN ACCORDANCE WITH THE SPECIFICATIONS. WHERE EXISTING FENCING OR BARRIERS ARE REMOVED, TEMPORARY BARRIERS SHALL BE PROVIDED. FENCING AND GATE SIGNS SHALL BE REPLACED FOLLOWING CONSTRUCTION.
23. ALL FENCING OR GATES TO BE LOCATED ON A PROPERTY LINE SHALL BE LOCATED BY CONTRACTOR'S QUALIFIED LICENSED LAND SURVEYOR OR REGISTERED ENGINEER.
24. THE CONTRACTOR SHALL REPAIR ANY DAMAGE TO EXISTING FACILITIES AS DIRECTED BY THE CONTRACTING OFFICER.
25. THE CONTRACTOR SHALL VERIFY ALL DIMENSIONS, SIZES AND LOCATIONS OF ALL EXISTING FACILITIES, UNDERGROUND UTILITIES, AND FEATURES TO REMAIN BEFORE STARTING WORK AND SHALL IMMEDIATELY NOTIFY THE CONTRACTING OFFICER OF ANY DISCREPANCIES.
26. UTILITY INFORMATION WAS COMPILED FROM DATA PROVIDED BY THE UTILITY OWNERS AND LOCATIONS ARE APPROXIMATE. THE ACTUAL LOCATIONS AND ELEVATIONS OF THE EXISTING UTILITIES SHALL BE VERIFIED BY THE CONTRACTOR.
27. DURING CONTRACT ACTIVITIES THE CONTRACTOR SHALL BE RESPONSIBLE FOR THE LOCATION AND PROTECTION OF ALL EXISTING UNDERGROUND AND OVERHEAD UTILITIES FROM DAMAGE FROM CONSTRUCTION EQUIPMENT AND OPERATIONS.
28. THE CONTRACTOR IS HEREBY NOTIFIED THAT, PRIOR TO COMMENCING CONSTRUCTION, THE CONTRACTOR IS RESPONSIBLE FOR CONTACTING ALL UTILITY COMPANIES WHO ARE INVOLVED WITH THIS PROJECT. THE CONTRACTOR SHALL COORDINATE WORK WITH THESE COMPANIES WHEN WORKING NEAR UTILITY LINES AND UTILITY POLES.
29. THE CONTRACTOR IS TO REQUEST TO HAVE ALL UNDERGROUND UTILITIES THAT MAY POSSIBLY CONFLICT WITH THE ABOVE OR BELOW GROUND IMPROVEMENTS, LOCATED IN THE FIELD. THE CONTRACTOR AND ANY SUBCONTRACTOR ARE REQUIRED TO NOTIFY THE USA NORTH 811, 48 HOURS IN ADVANCE OF PERFORMING ANY EXCAVATION.
30. DRAWINGS SHOWN WITH AERIAL PHOTOS ARE PROVIDED FOR REFERENCE ONLY. ALL FACILITIES MAY NOT BE SHOWN ON PHOTOS. THE CONTRACTOR SHALL SATISFY THEMSELVES AS TO THE LOCATION OF EXISTING FACILITIES THAT MAY BE AFFECTED BY CONSTRUCTION.
31. EXISTING GRADES AND CONDITIONS SHALL BE CONFORMED TO WHENEVER POSSIBLE. ANY ADJACENT OR OFF SITE AREAS DISTURBED BY THE CONTRACTOR'S OPERATION MUST BE RESTORED BY THE CONTRACTOR TO THE PRE DISTURBANCE CONDITION TO THE SATISFACTION OF THE CONTRACTING OFFICER.
32. PIPE LENGTHS INDICATED ON DRAWINGS ARE THE DISTANCE BETWEEN THE CENTERLINE OF DISTRIBUTION BOXES, OR STANDPIPES, CONNECTIONS TO EXISTING PIPES, BENDS, AND ENDS OF PIPES AS APPLICABLE.
33. SURVEY (AERIAL PHOTO, AND TOPOGRAPHY AND FEATURES NORTH OF FARM ROAD) IS BASED ON A FIELD SURVEY AND AERIAL (LIDAR) SURVEY DATA DATED 2/28/17, PROVIDED BY TOWILL, INC.

    SUPPLEMENTAL SURVEY (TOPOGRAPHY AND FEATURES SOUTH OF FARM ROAD) IS BASED ON A FIELD SURVEY DATED 2/27/19, PROVIDED BY THE CALIFORNIA DEPARTMENT OF WATER RESOURCES.

    BOUNDARY SURVEY PROVIDED BY PSOMAS.

    THE HORIZONTAL DATUM OF THIS SURVEY IS THE NORTH AMERICAN DATUM OF 1983 (NAD83) (1991.35 EPOCH) BEING THE CALIFORNIA COORDINATE SYSTEM OF 1983 (CCS83) ZONE 2 (GRID SURFACE).

    THE VERTICAL DATUM OF THIS SURVEY IS THE NORTH AMERICAN VERTICAL DATUM OF 1988 (NAVD88).

HABITAT PROTECTION NOTES

1. SEE SPECIAL PROVISIONS AND GENERAL SPECIFICATIONS, FOR MEASURES TO BE APPLIED WHEN WORKING AROUND TREES TO BE AVOIDED.
2. SEE SPECIAL PROVISIONS AND GENERAL SPECIFICATIONS, FOR AVOIDING AND MINIMIZING IMPACTS TO THE GIANT GARTER SNAKE, AND FOR MEASURES TO BE APPLIED WHEN WORKING WITHIN THE 200 FOOT OF GIANT GARTER SNAKE (AQUATIC) HABITAT.
3. LIMITS OF TEMPORARY FENCING FOR HABITAT PROTECTION WILL BE FLAGGED IN THE FIELD BY CONTRACTING OFFICER.

ABBREVIATIONS

∠	ANGLE
AB	AGGREGATE BASE, ANCHOR BOLT
AC	ALTERNATING CURRENT
ACC	ACCESSIBLE
ACI	AMERICAN CONCRETE INSTITUTE
ADH	ADHESIVE
ADJ	ADJACENT, ADJOINING, ADJUSTABLE
AFF	ABOVE FINISHED FLOOR
AGGR	AGGREGATE
AISC	AMERICAN INSTITUTE OF STEEL CONSTRUCTION
ALT	ALTERNATE
ALUM	ALUMINUM
AMB	AMBIENT
AMP	AMPERE
ANSI	AMERICAN NATIONAL STANDARDS INSTITUTE
APN	ASSESSOR'S PARCEL NUMBER
APPD	APPROVED
APPROX	APPROXIMATE
ASPH	ASPHALT
ASTM	AMERICAN SOCIETY FOR TESTING AND MATERIALS
AUTO	AUTOMATIC
AVG	AVERAGE
AWG	AMERICAN WIRE GAUGE
BC	BEGINNING OF CURVE
BDRY	BOUNDARY
BEV	BEVEL
BF	BOTTOM FACE, BLIND FLANGE
BFV	BUTTERFLY VALVE
BITUM	BITUMINOUS
BL	BASELINE, BUILDING LINE
BLDG	BUILDING
BLVD	BOULEVARD
BM	BENCHMARK
BO	BOTTOM OF
BOT	BOTTOM
BP	BEGIN POINT, BASE PLATE
BRCG	BRACING
BRG	BEARING
BRG PL	BEARING PLATE
BRKT	BRACKET
BS	BOTH SIDES
BTWN	BETWEEN
BVC	BEGINNING OF VERTICAL CURVE
BW	BUTTWELD, BOTH WAYS
C	CURVE
CAP	CAPACITY
CB	CATCH BASIN
CBC	CALIFORNIA BUILDING CODE
CCW	COUNTER CLOCKWISE
CDF	CONTROLLED DENSITY FILL
CEM	CEMENT
CFM	CUBIC FEET PER MINUTE
CFS	CUBIC FEET PER SECOND
CG	CUT GRADE
CHFR	CHAMFER
CHK	CHECK
CIP	CAST-IN-PLACE
CIRC	CIRCULAR
CJ	CONSTRUCTION JOINT, CONTROL JOINT
CKT	CIRCUIT
CKT BRKR	CIRCUIT BREAKER
CL, ℄	CENTER LINE
CLL	CONTRACT LIMIT LINE
CLR	CLEARANCE)
CLRM	CONCRETE LOW STRENGTH MATERIAL
CMP	CORRUGATED METAL PIPE
CND	CONDUIT
COL	COLUMN
COM	COMMON
CONT	CONTINUE, CONTINUOUS
CONTR	CONTRACTOR
COV	COVER
CP	CONTROL POINT
CT	CURRENT TRANSFORMER
C TO C	CENTER TO CENTER
CTR	CENTER
Cu	COPPER
CU FT	CUBIC FEET
CU YD	CUBIC YARDS
CVT	CULVERT
DAT	DATUM
db	BAR DIAMETER
DBL	DOUBLE
DEG	DEGREE
DEMO	DEMOLITION
DET	DETAIL
DIA, Ø	DIAMETER
DIAG	DIAGONAL
DIM	DIMENSION
DIP	DUCTILE IRON PIPE
DIST	DISTANCE, DISTRIBUTION
DL	DEAD LOAD
DN	DOWN
DP	DEPTH
DR	DOOR
DR	DRAIN
DS	DOWNSTREAM
DTL	DETAIL
DWG	DRAWING
DWLS	DOWELS
DWY	DRIVEWAY
E	EAST
EA	EACH
EC	END OF CURVE
EF	EACH FACE
EG	EXISTING GRADE / GROUND
EJ	EXPANSION JOINT
EL, ELEV	ELEVATION - GRADE OR BUILDING
ELL	ELBOW
ELEC	ELECTRIC
EMD	ESTIMATED MAXIMUM DEMAND
EMER	EMERGENCY
ENCL	ENCLOSE(URE)
ENGR	ENGINEER
ENTR	ENTRANCE, ENTERING
EOP	EDGE OF PAVEMENT
EP	END POINT, ELECTRICAL PANELBOARD
EPY	EPOXY COATING
EQ	EQUAL
EQUIP	EQUIPMENT
EST	ESTIMATE(D)
EX	EXISTING
EXC	EXCAVATION, EXCAVATE
EXP	EXPANSION
EXP BT	EXPANSION BOLT
EXT	EXTERIOR
F	FAHRENHEIT
FCJ	FLOOR CONSTRUCTION JOINT
FDTN	FOUNDATION
FG	FINISH GRADE
FH	FLAT HEAD
FIG	FIGURE
FIN	FINISHED, FINISH
FIN FLR	FINISH FLOOR
FL	FLOW LINE
FLR	FLOOR
FLEX	FLEXIBLE
FLR PL	FLOOR PLATE
FN	FENCE
FOC	FACE OF CURB, FACE OF CONCRETE
FOF	FACE OF FINISH
FPM	FEET PER MINUTE
FPS	FEET PER SECOND
FT	FEET
FT/FT	FOOT PER FOOT
FTG	FOOTING
GA	GUY ANCHOR, GAUGE, GAGE
GAL	GALLON(S)
GALV	GALVANIZED
GALV STL	GALVANIZED STEEL
GB	GRADE BREAK, GRAB BAR
GEN	GENERAL
GKT	GASKET(ED)
GND	GROUND
GPM	GALLONS PER MINUTE
GPOST	GATE POST
GR LN	GRADE LINE
GRTG	GRATING
GS	GROUND SHOT
GT	GROUT
HD	HEAVY DUTY
HDBD	HARDBOARD
HD JT	HEAD JOINT
HDPE	HIGH-DNSITY POLYETHYLENE
HK	HOOK(S)
HNDRL	HANDRAIL
HORIZ	HORIZONTAL
HT	HEIGHT
HVAC	HEATING, VENTILATING AND AIR CONDITIONING
HWL	HIGH WATER LEVEL
HYDR	HYDRAULIC
Hz	HERTZ
ID	INSIDE DIAMETER
IE	INVERT ELEVATION
ILK	INTERLOCK
IN	INCH, INCHES
INCL	INCLUDED
INT	INTERIOR
INV	INVERT OF PIPE (FLOW LINE ELEVATION)
J-BOX	JUNCTION BOX
JCT	JUNCTION
JT	JOINT
KPL	KICKPLATE
kV	KILOVOLTS
kVA	KILOVOLT AMPERES
kW	KILOWATT
L	LENGTH
LB	POUND, LAG BOLT
LB/FT²	POUND(S) PER SQUARE FOOT
LB/IN²	POUND(S) PER SQUARE INCH
LD	LOAD
LDG	LOADING
LF	LINEAR FEET
LG	LENGTH
LIN	LINEAR
LL	LIVE LOAD
LLO	LONG LEG OPPOSITE
LLV	LONG LEG VERTICAL
LN	LANE
LOC	LOCATION
LONG	LONGITUDINAL
LR	LONG RADIUS
LTB	LEFT TOP OF BANK
LWL	LOW WATER LEVEL
MACH	MACHINE
MAINT	MAINTENANCE
MATL	MATERIAL(S)
MAX	MAXIMUM
MCC	MOTOR CONTROL CENTER
MECH RM	MECHANICAL ROOM
MEMB	MEMBRANE
MH	MANHOLE
MIN	MINIMUM
MISC	MISCELLANEOUS
MTD	MOUNTED
MTL	METAL
N	NORTH
NAVD	NORTH AMERICAN VERTICAL DATUM
NFPA	NATIONAL FIRE PROTECTION ASSOCIATION
NGS	NATIONAL GEOLOGICAL SURVEY
NGVD	NATIONAL GEODETIC VERTICAL DATUM
NM	NONMETALLIC
NCMWC	NATOMAS CENTRAL MUTUAL WATER COMPANY
NO	NUMBER, NORMALLY OPEN
NOM	NOMINAL
N°REQD	NOT REQUIRED
NTS	NOT TO SCALE
OC	ON CENTER
OCEW	ON CENTER EACH WAY
OD	OUTSIDE DIAMETER
OHE	OVERHEAD ELECTRIC
OHW	OVERHEAD WIRE
PC	POINT OF CURVATURE, PIECE
PCC	POINT OF COMPOUND CURVATURE, PRECAST CONCRETE
PCF	POUNDS PER CUBIC FOOT
PI	POINT OF INTERSECTION
PL	PLATE, PROPERTY LINE
PLAT	PLATFORM
PLF	POUNDS PER LINEAR FOOT
POB	POINT OF BEGINNING
POC	POINT OF CURVE
POE	POINT OF ENDING
PP	POWER POLE
PRES	PRESSURE
PROJ	PROJECT
PRV	PRESSURE-REGULATING VALVE
PSF	POUNDS PER SQUARE FOOT
PSI	POUNDS PER SQUARE INCH
PSO	PSOMAS
PT	POINT
PVI	POINT OF VERTICAL INTERSECTION
PVMT	PAVEMENT
Q	RATE OF FLOW
QTY	QUANTITY
R	RADIUS, RISER
R/W, ROW	RIGHT OF WAY
RBR	RUBBER
RC	REMOTE CONTROL
RCB	REINFORCED CONCRETE BOX
RD	ROAD, ROOF DRAIN
RD 1000	RECLAMATION DISTRICT 1000
REF	REFERENCE
REINF	REINFORCE(ING)
REQD	REQUIRED
RLG	RAILING
RND	ROUND
ROW	RIGHT OF WAY
RPM	REVOLUTIONS PER MINUTE
RSP	ROCK SLOPE PROTECTION
RTB	RIGHT TOP OF BANK
RTU	REMOTE TERMINAL UNIT
S	SOUTH, SLOPE
SAC	SACRAMENTO
SAFCA	SACRAMENTO AREA FLOOD CONTROL AGENCY
SCHED	SCHEDULE
SCRN	SCREEN
SD	STORM DRAIN
SEQ	SEQUENCE
SF	SQUARE FOOT
SHLDR	SHOULDER
SHT	SHEET
SIM	SIMILAR
SLNT	SEALANT
SLV	SLEEVE
SMUD	SACRAMENTO MUNICIPAL UTILITY DISTRICT
SOV	SHUT OFF VALVE
SPEC	SPECIFICATION
SQ	SQUARE
SS	STAINLESS STEEL
ST	STREET
STA	STAGE
STD	STANDARD
STL	STEEL
STRUCT	STRUCTURAL
SWBD	SWITCHBOARD
SYM	SYMBOL
SYMM	SYMMETRICAL
SYS	SYSTEM
TCE	TEMPORARY CONSTRUCTION EASEMENT
THK	THICK(NESS)
THW	TOP OF HEADWALL
TNBC	THE NATOMAS BASIN CONSERVANCY
TO	TOP OF
TOB	TOP OF BANK, TOP OF EMBANKMENT
TOC	TOP OF CONCRETE
TOFE	TOP OF FOUNDATION ELEVATION
TOL	TOLERANCE
TOPO	TOPOGRAPHY
TOS	TOP OF SLAB, TOP OF STEEL
TOW	TOP OF WALL
TYP	TYPICAL
UG	UNDERGROUND
UGE	UNDERGROUND ELECTRICAL
UON	UNLESS OTHERWISE NOTED
UPS	UNINTERRUPTABLE POWER SUPPLY
UTIL	UTILITY
V	VELOCITY, VOLT
VAR	VARIABLE, VARNISH
VC	VERTICAL CURVE
VERT	VERTICAL
VFD	VARIABLE FREQUENCY DRIVE
VIF	VERIFY IN FIELD
VOL	VOLUME
V.T.	VOLTAGE TRANSFORMER
W/	WITH
W/O	WITHOUT
WP	WATERPROOF(ING), WEATHERPROOF, WORKING POINT
WS	WATERSTOP
WSE, WSEL	WATER SURFACE ELEVATION
WSP	WELDED STEEL PIPE
WT	WEIGHT
WWF	WELDED WIRE FABRIC
WY	WAY
XFMR	TRANSFORMER
XSECT	CROSS SECTION
YD	YARD

US Army Corps of Engineers®

MARK	DESCRIPTION	DATE

DESIGNED BY: C. STEPPER
DRAWN BY: E. DIOCSON
CHECKED BY: S. SULLIVAN
SUBMITTED BY: J. KASHIWADA
ISSUE DATE: 05/06/2019
SOLICITATION NO.:
CONTRACT NO.:
FILE NO: 1-04-0642
SPEC NO:
SIZE: ANSI D
FILE NAME: G-004.dwg
24"x36"

U.S. ARMY CORPS OF ENGINEERS
SACRAMENTO DISTRICT

MEAD & HUNT, INC.
180 PROMENADE CIRCLE, SUITE 240
SACRAMENTO, CA 95834

AMERICAN RIVER COMMON FEATURES
NATOMAS BASIN REACH B
RIVERSIDE CANAL PHASE 2 RELOCATION PROJECT

NOTES AND ABBREVIATIONS

SHEET ID
G-004

X:\1941500\161390.01\TECH\CAD\Riverside Canal\G-004.dwg

FINAL ISSUE FOR BID

SYMBOLS

- BENCHMARK
- CONTROL POINT
- BOLLARD
- ELECTRIC MANHOLE
- ELECTRIC METER
- ELECTRIC PEDESTAL BOX
- ELECTRIC TRANSFORMER BOX (TRANS)
- ELECTRIC SERVICE PANEL
- ELECTRIC HANDHOLE (PULLBOX)
- FIBER OPTIC MANHOLE
- GATE
- LIGHT BOLLARD
- LIGHT POLE (SINGLE)
- MARKER, CABLE
- MARKER, DUCT
- MONITORING WELL
- PIEZOMETER
- POWER POLE
- POWER POLE, DOUBLE
- POWER POLE WITH LIGHT
- SIGN (SINGLE POST)
- SIGN (DOUBLE POST)
- TRAFFIC FLOW DIRECTION
- UTILITY CROSSING / CONFLICT or CAUTION
- VALVE MANHOLE
- WATER VALVE
- WATER SURFACE
- 734.97' — EXISTING SPOT ELEVATION
- 738.76 — FINISHED / PROPOSED SPOT ELEVATION
- 3:1 / 2% — FINISHED / PROPOSED SLOPE

LINES

- CONSTRUCTION LIMITS
- CENTERLINE / BASELINE
- CON — CONDUIT, GENERIC
- G — GAS
- OHE — ELECTRIC, OVERHEAD
- E — ELECTRIC, UNDERGROUND
- EASEMENT
- xxx(.xx) / xxx(.xx) — EXISTING CONTOUR LINES
- xxx(.xx) / xxx(.xx) — PROPOSED CONTOUR LINES
- x — FENCE
- xx — FENCE (2)
- xxx — FENCE (3)
- FOC — FIBER OPTIC CABLE
- F — FUEL LINE
- GRADE BREAK
- GRADING LIMITS
- GUARDRAIL
- HANDRAIL
- HAUL or TRAFFIC ROUTE
- PROPERTY LINE
- ROW — RIGHT-OF-WAY
- SS — SANITARY SEWER
- SHEETPILE
- SILT FENCE
- SD — STORM SEWER / CULVERT
- DRAINAGE SWALE
- UD — UNDERDRAIN
- W — WATER
- WB — WETLAND BOUNDARY
- VEGETATION
- Q100 — 100YR (Q100) FLOOD LINE

SECTIONS/DETAILS

(SEE X-XXX) SHEET REFERENCE

(SEE X/X-XXX) DETAIL REFERENCE

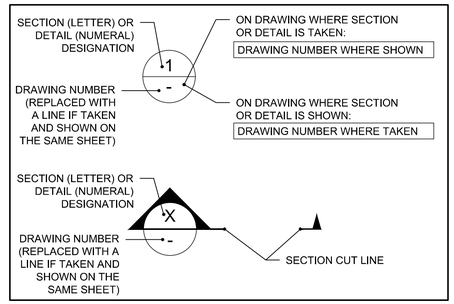

PATTERNS

- RIPRAP
- AGGREGATE SUBBASE
- ASPHALT
- ASPHALT OVERLAY
- CONCRETE
- GROUND, EXISTING
- GROUND, PROPOSED
- REMOVAL PATTERN
- EXCAVATION PATTERN
- BEDDING PATTERN

CONTACT:

AGENCY

JOHN BASSETT, DIRECTOR OF ENGINEERING
SACRAMENTO AREA FLOOD CONTROL AGENCY (SAFCA)
1007 7TH STREET
SACRAMENTO, CA
(916) 874-7606

ENGINEER - DESIGN

JEFF KASHIWADA, CIVIL ENGINEER
MEAD & HUNT
180 PROMENADE CIRCLE, SUITE 240
SACRAMENTO, CA
(916) 971-3961

LIST OF CONTACTS

PUBLIC / UTILITY SERVICE	RESPONSIBLE ENTITY	REPRESENTATIVE	TELEPHONE
UNDERGROUND SERVICE ALERT	USA NORTH	- - -	800-642-2444
SPONSOR	SAFCA	JOHN BASSETT	916-874-7606
FEDERAL AGENCY	USACE	MARKUS BOEDTKER	916-557-6637
IRRIGATION SUPPLY	NCMWC	BRETT GRAY	916-419-5936
DRAINAGE (O&M)	RD 1000	KEVIN KING	916-922-1449
DESIGN ENGINEER	MEAD & HUNT, INC.	JEFF KASHIWADA	916-971-3961
GEOTECHNICAL ENGINEER	USACE	KHALED CHOWDHURY, PE, GE	916-557-5309
HABITAT MANAGER	NATOMAS BASIN CONSERVANCY	JOHN ROBERTS	916-649-3331
ELECTRICITY	SMUD	MICHELLE ZUNIGA	916-732-5726
TELEPHONE	AT&T	ASTRID WILLARD	916-453-6136
TRANSPORTATION	SACRAMENTO COUNTY	KYLE HINES	916-874-6760

NOTES:
1. ADMINISTRATION OF ALL WORK PERFORMED BY THE CONTRACTOR SHALL COMPLY WITH THE GENERAL SPECIFICATIONS.

US Army Corps of Engineers®

MARK	DESCRIPTION	DATE

DESIGNED BY: C. STEPPER
DRAWN BY: E. DIOCSON
CHECKED BY: S. SULLIVAN
SUBMITTED BY: J. KASHIWADA
SIZE: ANSI D
ISSUE DATE: 05/06/2019
SOLICITATION NO.:
CONTRACT NO.:
FILE NO: 7-04-0842
SPEC NO: 2122
FILE NAME: G-005.dwg

U.S. ARMY CORPS OF ENGINEERS
SACRAMENTO DISTRICT

MEAD & HUNT, INC.
180 PROMENADE CIRCLE, SUITE 240
SACRAMENTO, CA 95834

AMERICAN RIVER COMMON FEATURES
NATOMAS BASIN REACH B
RIVERSIDE CANAL PHASE 2 RELOCATION PROJECT

LEGEND AND LIST OF CONTACTS

SHEET ID
G-005

X:\19941500\161390.01\TECH\CAD\Riverside Canal\G-005.dwg

FINAL ISSUE FOR BID



0 40 80

DEMOLITION NOTES:

(1) REMOVE AND WASTE EXISTING BARB WIRE FENCING WITHIN CONSTRUCTION LIMITS.

(2) REMOVE AND WASTE EXISTING 24" CMP.

NOTES:

1. MAINTAIN IRRIGATION FLOWS THROUGH LATERAL CANALS OR PROVIDE TEMPORARY IRRIGATION SUPPLY AT A RATE OF 5 CFS WITH MINIMUM WATER SURFACE ELEVATION OF 21.5 AT WATER SUPPLY OUTLET.
2. CLEAR AND GRUB IN ACCORDANCE WITH SPECIFICATION SECTION 311100.

US Army Corps of Engineers®

MARK	DESCRIPTION	DATE

DESIGNED BY: C. STEPPE
DRAWN BY: E. DIOCSON
CHECKED BY: S. SULLIVAN
SUBMITTED BY: J. KASHIWADA
SIZE: ANSI D
ISSUE DATE: 05/06/2019
SOLICITATION NO.:
CONTRACT NO.:
FILE NO: I-04-0642
FILE NAME: DEMO SHEETS.dwg
SPEC NO: 2122

U.S. ARMY CORPS OF ENGINEERS
SACRAMENTO DISTRICT

MEAD & HUNT, INC.
180 PROMENADE CIRCLE, SUITE 240
SACRAMENTO, CA 95834

AMERICAN RIVER COMMON FEATURES
NATOMAS BASIN REACH B
RIVERSIDE CANAL PHASE 2 RELOCATION PROJECT

RIVERSIDE ALIGNMENT
DEMOLITION STA 143+00 TO STA 153+00

SHEET ID

C-001

X:\19941500\161390.01\TECH\CAD\Riverside Canal\DEMO SHEETS.dwg

FINAL ISSUE FOR BID



NOTES:

1. MAINTAIN ADEQUATE CLEARANCE BETWEEN EQUIPMENT AND OVERHEAD POWER LINES. LOCATION OF POWER LINES IS APPROXIMATE. ACTUAL LOCATION TO BE FIELD VERIFIED.

US Army Corps of Engineers®

MARK	DESCRIPTION	DATE

DESIGNED BY: C. STEPPER
DRAWN BY: E. DIOCSON
CHECKED BY: S. SULLIVAN
SUBMITTED BY: J. KASHIWADA
SIZE: ANSI D
ISSUE DATE: 05/06/2019
SOLICITATION NO.:
CONTRACT NO.:
FILE NO: 1-04-0642
FILE NAME: DEMO SHEETS.dwg
SPEC NO: 2122

U.S. ARMY CORPS OF ENGINEERS
SACRAMENTO DISTRICT

MEAD & HUNT, INC.
180 PROMENADE CIRCLE, SUITE 240
SACRAMENTO, CA 95834

AMERICAN RIVER COMMON FEATURES
NATOMAS BASIN REACH B
RIVERSIDE CANAL PHASE 2 RELOCATION PROJECT

RIVERSIDE ALIGNMENT
DEMOLITION STA 173+00 TO STA 182+00

SHEET ID

C-002

X:\19941500\161390.01\TECH\CAD\Riverside Canal\DEMO SHEETS.dwg

FINAL ISSUE FOR BID



0 40 80

NOTE:

1. PROTECT IN PLACE EXISTING RD 1000 DRAINAGE CULVERT.

US Army Corps of Engineers®

MARK	DESCRIPTION	DATE

DESIGNED BY: C. STEPPER
DRAWN BY: E. DIOCSON
CHECKED BY: S. SULLIVAN
SUBMITTED BY: J. KASHIWADA
SIZE: ANSI D
ISSUE DATE: 05/06/2019
SOLICITATION NO.:
CONTRACT NO.:
FILE NO: 1-04-0642
FILE NAME: DEMO SHEETS.dwg
SPEC NO: 2122

U.S. ARMY CORPS OF ENGINEERS
SACRAMENTO DISTRICT

MEAD & HUNT, INC.
180 PROMENADE CIRCLE, SUITE 240
SACRAMENTO, CA 95834

AMERICAN RIVER COMMON FEATURES
NATOMAS BASIN REACH B
RIVERSIDE CANAL PHASE 2 RELOCATION PROJECT

RIVERSIDE ALIGNMENT
DEMOLITION STA 194+00 TO STA 203+00

SHEET ID

C-003

X:\19941500\161390.01\TECH\CAD\Riverside Canal\DEMO SHEETS.dwg

FINAL ISSUE FOR BID



DEMOLITION NOTES:

1. REMOVE AND WASTE EXISTING CMP
2. REMOVE AND WASTE EXISTING HEADWALL
3. REMOVE AND WASTE EXISTING CONCRETE STRUCTURE
4. REMOVE AND WASTE EXISTING CONCRETE LINING, LENGTH VARIES BETWEEN 10-FEET AND 30-FEET.
5. TREE HAS BEEN REMOVED BY OTHERS WITH STUMP LEFT IN PLACE. CLEAR ANY REGROWTH AND CLEAR AND GRUB STUMP AND ROOTS IN ACCORDANCE WITH SPECIFICATION 31 11 00.

NOTE:

1. CLEAR AND GRUB IN ACCORDANCE WITH SPECIFICATION SECTION 311100.

US Army Corps of Engineers®

MARK	DESCRIPTION	DATE

DESIGNED BY: C.STEPHEN
DRAWN BY: E. DIOCSON
CHECKED BY: S. SULLIVAN
SUBMITTED BY: J. KASHIWADA
SIZE: ANSI D
ISSUE DATE: 05/06/2019
SOLICITATION NO.:
CONTRACT NO.:
FILE NO: 1-04-0642
FILE NAME: DEMO SHEETS.dwg
SPEC NO: 2122

U.S. ARMY CORPS OF ENGINEERS
SACRAMENTO DISTRICT

MEAD & HUNT, INC.
180 PROMENADE CIRCLE, SUITE 240
SACRAMENTO, CA 95834

AMERICAN RIVER COMMON FEATURES
NATOMAS BASIN REACH B
RIVERSIDE CANAL PHASE 2 RELOCATION PROJECT

RIVERSIDE ALIGNMENT
DEMOLITION STA 233+00 TO STA 238+00

SHEET ID
C-004

X:\19941500\161390.01\TECH\CAD\Riverside Canal\DEMO SHEETS.dwg

FINAL ISSUE FOR BID



DEMOLITION NOTE:

1. TREE HAS BEEN REMOVED BY OTHERS WITH STUMP LEFT IN PLACE. CLEAR ANY REGROWTH AND CLEAR AND GRUB STUMP AND ROOTS IN ACCORDANCE WITH SPECIFICATION 31 11 00.

NOTE:

1. CLEAR AND GRUB IN ACCORDANCE WITH SPECIFICATION SECTION 311100.

US Army Corps of Engineers®

MARK	DESCRIPTION	DATE

DESIGNED BY:	ISSUE DATE:
C. STEPPER	05/06/2019
DRAWN BY:	SOLICITATION NO.:
E. DIOCSON	
CHECKED BY:	CONTRACT NO.:
S. SULLIVAN	
SUBMITTED BY:	FILE NO:
J. KASHIWADA	T-04-0842
SIZE: SPEC NO:	FILE NAME
ANSI D 2122	DEMO SHEETS.dwg

U.S. ARMY CORPS OF ENGINEERS
SACRAMENTO DISTRICT

MEAD & HUNT, INC.
180 PROMENADE CIRCLE, SUITE 240
SACRAMENTO, CA 95834

AMERICAN RIVER COMMON FEATURES
NATOMAS BASIN REACH B
RIVERSIDE CANAL PHASE 2 RELOCATION PROJECT

RIVERSIDE ALIGNMENT DEMOLITION STA 245+00 TO STA 251+00

SHEET ID

C-005

X:\19415000\161390.01\TECH\CAD\Riverside Canal\DEMO SHEETS.dwg

FINAL ISSUE FOR BID



DEMOLITION NOTES:

1. REMOVE AND WASTE EXISTING CMP
2. REMOVE AND WASTE CONCRETE DISTRIBUTION BOX
3. NOT USED
4. PROTECT IN PLACE EXISTING PIPE
5. TREE HAS BEEN REMOVED BY OTHERS WITH STUMP LEFT IN PLACE. CLEAR ANY REGROWTH AND CLEAR AND GRUB STUMP AND ROOTS IN ACCORDANCE WITH SPECIFICATION 31 11 00.

NOTE:

1. CLEAR AND GRUB IN ACCORDANCE WITH SPECIFICATION SECTION 311100.
2. PROTECT IN PLACE UTILITIES AND POLES.

0 40 80

US Army Corps of Engineers®

MARK	DESCRIPTION	DATE

DESIGNED BY: C. STEPPE
DRAWN BY: E. DIOCSON
CHECKED BY: S. SULLIVAN
SUBMITTED BY: J. KASHIWADA
SIZE: ANSI D
ISSUE DATE: 05/06/2019
SOLICITATION NO.:
CONTRACT NO.:
FILE NO: 1-04-0642
FILE NAME: DEMO SHEETS.dwg
SPEC NO: 2122

U.S. ARMY CORPS OF ENGINEERS
SACRAMENTO DISTRICT

MEAD & HUNT, INC.
180 PROMENADE CIRCLE, SUITE 240
SACRAMENTO, CA 95834

AMERICAN RIVER COMMON FEATURES
NATOMAS BASIN REACH B
RIVERSIDE CANAL PHASE 2 RELOCATION PROJECT

PARKER ROAD ALIGNMENT
DEMOLITION STA 261+00 TO STA 267+00

SHEET ID
C-006

X:\1941500\161390.01\TECH\CAD\Riverside Canal\DEMO SHEETS.dwg

FINAL ISSUE FOR BID



0 40 80

DEMOLITION NOTE:

(1) TREE HAS BEEN REMOVED BY OTHERS WITH STUMP LEFT IN PLACE. CLEAR ANY REGROWTH AND CLEAR AND GRUB STUMP AND ROOTS IN ACCORDANCE WITH SPECIFICATION 31 11 00.

NOTE:

1. CLEAR AND GRUB IN ACCORDANCE WITH SPECIFICATION SECTION 311100.

US Army Corps of Engineers®

MARK	DESCRIPTION	DATE

DESIGNED BY: C.STEPPER
DRAWN BY: E. DIOCSON
CHECKED BY: S. SULLIVAN
SUBMITTED BY: J. KASHIWADA
SIZE: ANSI D
ISSUE DATE: 05/06/2019
SOLICITATION NO.:
CONTRACT NO.:
FILE NO: 1-04-0842
FILE NAME: DEMO SHEETS.dwg
SPEC NO: 2122

U.S. ARMY CORPS OF ENGINEERS
SACRAMENTO DISTRICT

MEAD & HUNT, INC.
180 PROMENADE CIRCLE, SUITE 240
SACRAMENTO, CA 95834

AMERICAN RIVER COMMON FEATURES
NATOMAS BASIN REACH B
RIVERSIDE CANAL PHASE 2 RELOCATION PROJECT

RIVERSIDE ALIGNMENT
DEMOLITION STA 282+00 TO STA 290+00

SHEET ID
C-007

X:\19415001\161390.01\TECH\CAD\Riverside Canal\DEMO SHEETS.dwg

FINAL ISSUE FOR BID

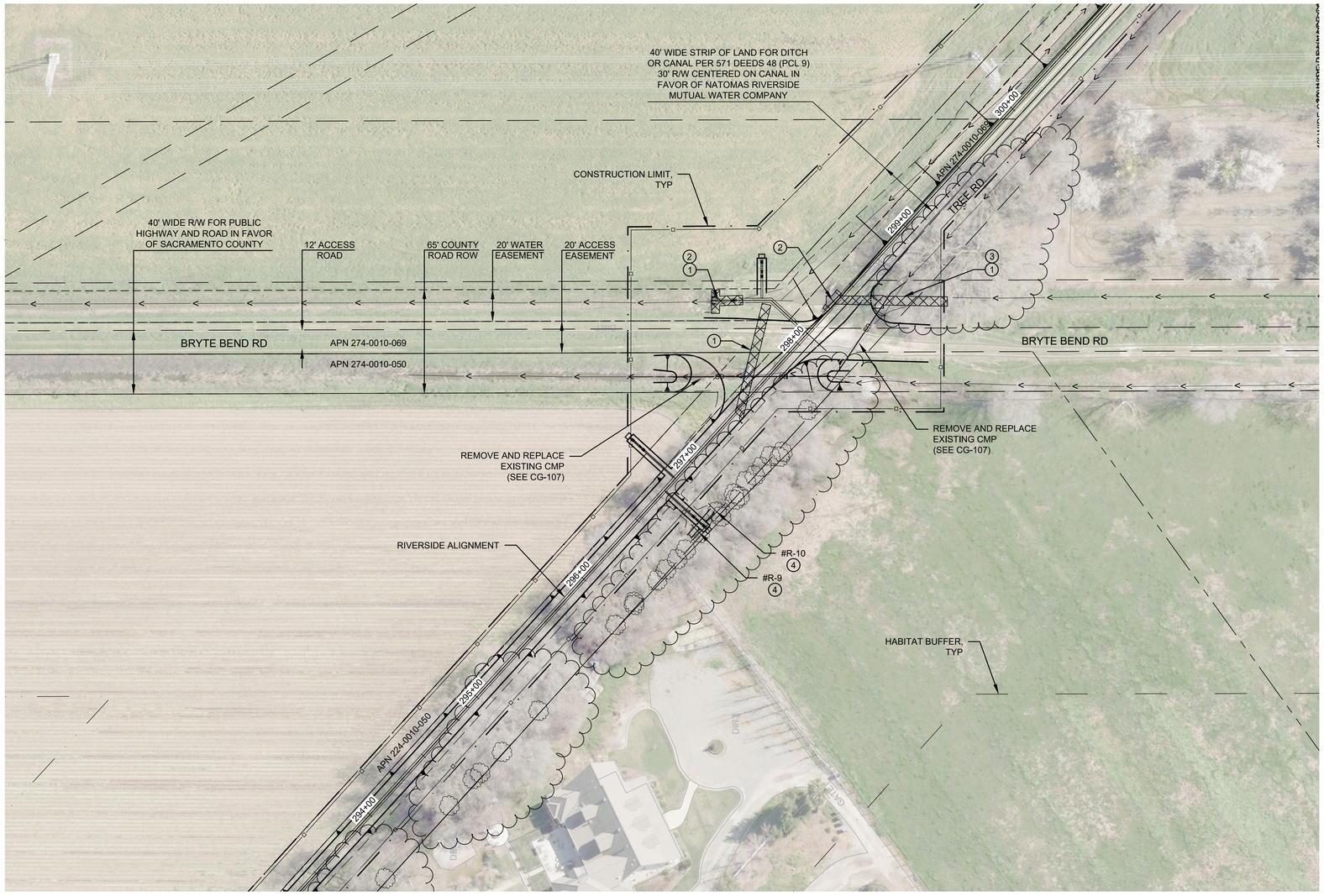

TREES TO BE REMOVED		
TAG NUMBER	SPECIES	BREAST HEIGHT DIAMETER (IN)
R-1	OAK	24
R-2	OAK	30
R-3	OAK	30
R-4	OAK	30
R-5	OAK	18
R-6	OAK	24
R-7	OAK	24
R-8	OAK	10
R-9	OAK	30
R-10	OAK	30

DEMOLITION NOTES:

1. REMOVE AND WASTE EXISTING CMP
2. REMOVE AND WASTE EXISTING HEADWALL
3. REMOVE AND WASTE EXISTING CONCRETE STRUCTURE
4. TREE HAS BEEN REMOVED BY OTHERS WITH STUMP LEFT IN PLACE. CLEAR ANY REGROWTH AND CLEAR AND GRUB STUMP AND ROOTS IN ACCORDANCE WITH SPECIFICATION 31 11 00.

NOTE:

1. CLEAR AND GRUB IN ACCORDANCE WITH SPECIFICATION SECTION 311100.

0 40 80

US Army Corps of Engineers®

MARK	DESCRIPTION	DATE

DESIGNED BY: C. STEPPER
DRAWN BY: E. DIOCSON
CHECKED BY: S. SULLIVAN
SUBMITTED BY: J. KASHIWADA
SIZE: ANSI D
ISSUE DATE: 05/06/2019
SOLICITATION NO.:
CONTRACT NO.:
FILE NO: 1-04-0842
FILE NAME: DEMO SHEETS.dwg
SPEC NO. 2122

U.S. ARMY CORPS OF ENGINEERS
SACRAMENTO DISTRICT

MEAD & HUNT, INC.
180 PROMENADE CIRCLE, SUITE 240
SACRAMENTO, CA 95834

AMERICAN RIVER COMMON FEATURES
NATOMAS BASIN REACH B
RIVERSIDE CANAL PHASE 2 RELOCATION PROJECT

RIVERSIDE ALIGNMENT
DEMOLITION AND TREE INVENTORY
STA 294+00 TO STA 300+00

SHEET ID

C-008

X:\19415001\161390.01\TECH\CAD\Riverside Canal\DEMO SHEETS.dwg

FINAL ISSUE FOR BID

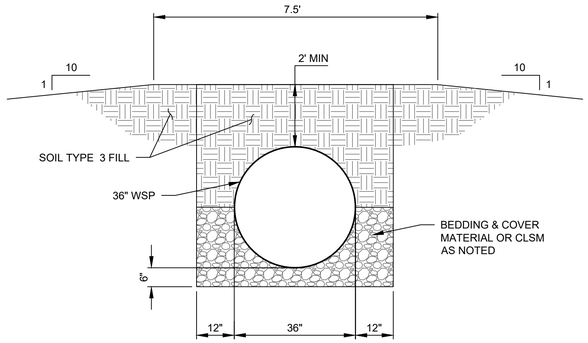

7 RIVERSIDE OUTFALL PIPE TYPICAL SECTION

1" = 2'

0 1 2 4

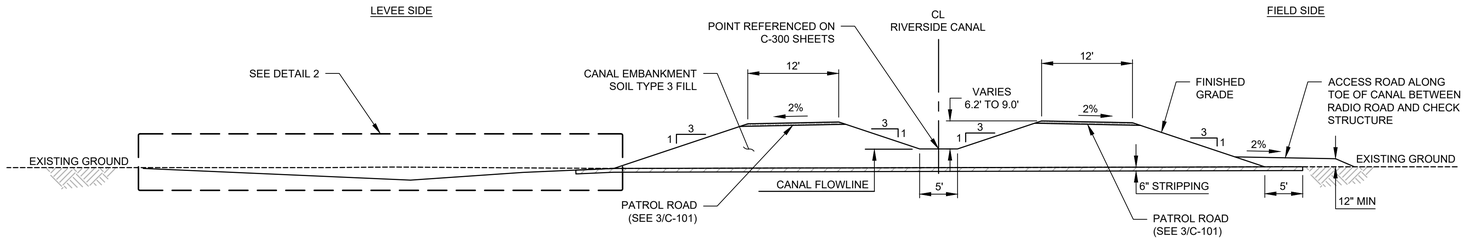

1 RIVERSIDE CANAL TYPICAL SECTION

1" = 10'

0 5 10 20

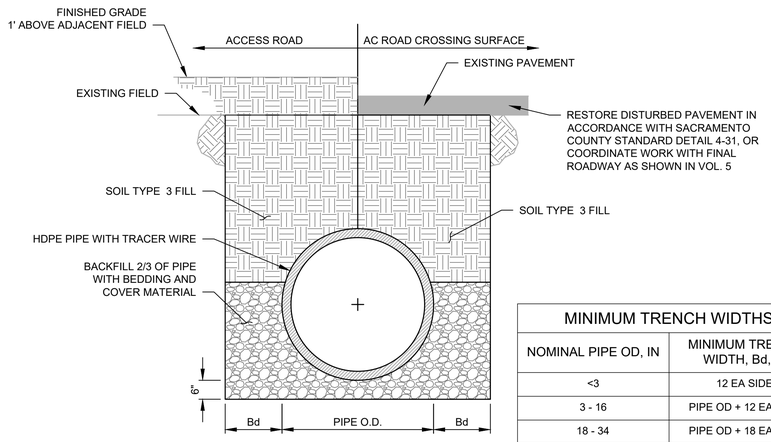

MINIMUM TRENCH WIDTHS	
NOMINAL PIPE OD, IN	MINIMUM TRENCH WIDTH, Bd, IN
<3	12 EA SIDE
3 - 16	PIPE OD + 12 EA SIDE
18 - 34	PIPE OD + 18 EA SIDE
36 - 63	PIPE OD + 24 EA SIDE
72 - 96	PIPE OD + 36 EA SIDE

8 HDPE PIPE TRENCH DETAIL

1" = 2'

0 1 2 4

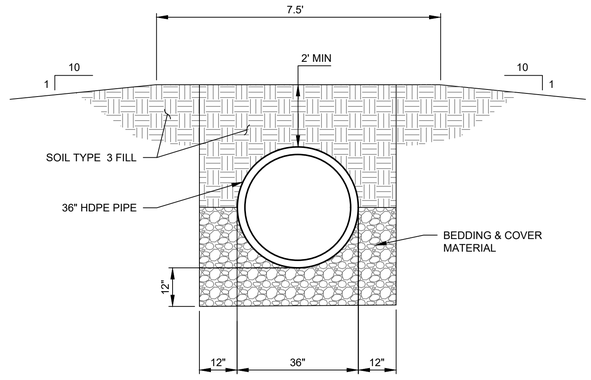

5 RIVERSIDE OUTFALL PIPE TEMPORARY HDPE SECTION

1" = 2'

0 1 2 4

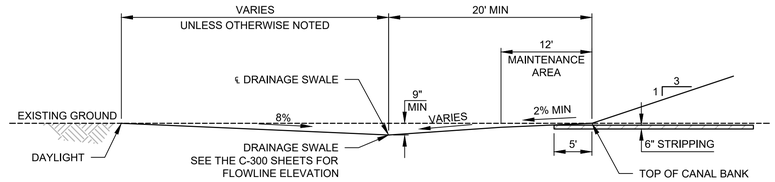

2 DRAINAGE SWALE TYPICAL SECTION

1" = 10'

0 5 10 20

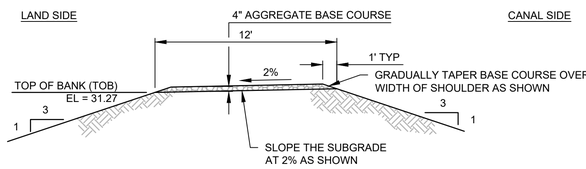

3 PATROL ROAD TYPICAL SECTION

1" = 5'

0 2.5 5 10

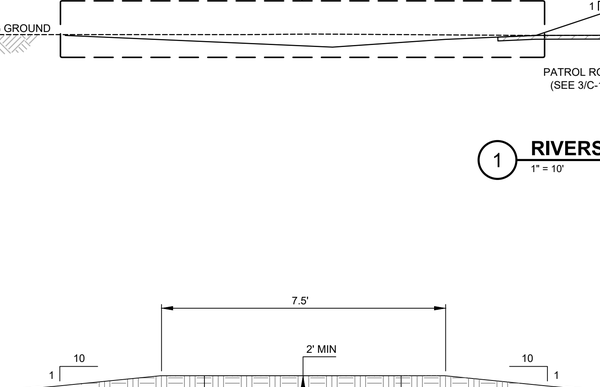

6 RIVERSIDE OUTFALL PIPE DRAINAGE FILTER SECTION

1" = 2'

0 1 2 4

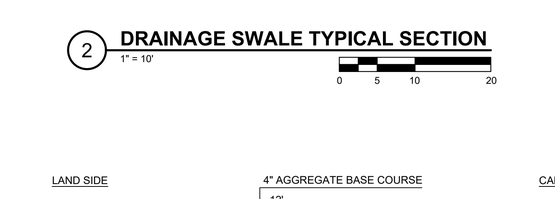

NOTE:

1. THIS DETAIL SHALL BE APPLICABLE WHEREVER THE RIVERSIDE CANAL FLOWLINE ELEVATION IS LESS THAN 2'-0" ABOVE EXISTING GRADE OR WHEN THE SUBGRADE IS DETERMINED TO BE UNSUITABLE BY THE CONTRACTING OFFICER.

4 TYPICAL OVER EXCAVATION DETAIL

1" = 10'

0 5 10 20

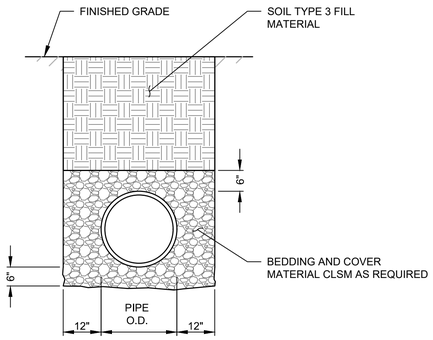

9 TURNOUT PIPE TRENCH DETAIL

1" = 1'-0"

0 1/2' 1' 2'

US Army Corps of Engineers®

MARK	DESCRIPTION	DATE

DESIGNED BY: E. DIOCSON
+/- DESIGNER
DRAWN BY: E. DIOCSON
CHECKED BY: +/- CHECKER
SUBMITTED BY: +/- SUBMITTER
SIZE: ANSI D
ISSUE DATE: 05/06/2019
SOLICITATION NO.:
CONTRACT NO.:
FILE NO: 1-04-0642
FILE NAME: C-101 TYPICAL SECTIONS.dwg
SPEC NO: 2122

U.S. ARMY CORPS OF ENGINEERS
SACRAMENTO DISTRICT

MEAD & HUNT, INC.
180 PROMENADE CIRCLE, SUITE 240
SACRAMENTO, CA 95834

AMERICAN RIVER COMMON FEATURES
NATOMAS BASIN REACH B
RIVERSIDE CANAL PHASE 2 RELOCATION PROJECT

TYPICAL SECTIONS

SHEET ID
C-101

X:\19415001\161390.01\TECH\CAD\Riverside Canal\C-101 TYPICAL SECTIONS.dwg

FINAL ISSUE FOR BID

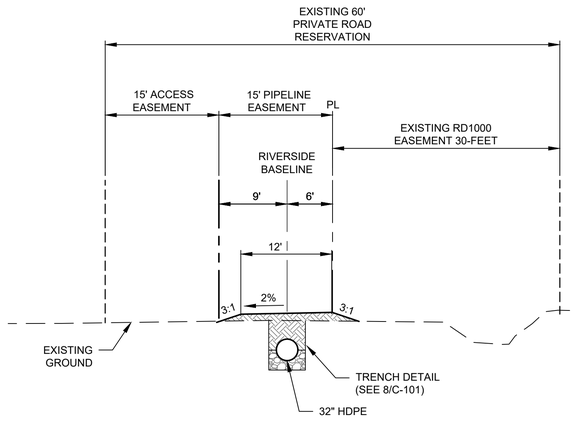

TYPICAL PIPELINE CROSS SECTION SOUTH OF PARKER ROAD STA 276+00 to 297+00

7 — 1" = 10'

0 5 10 20

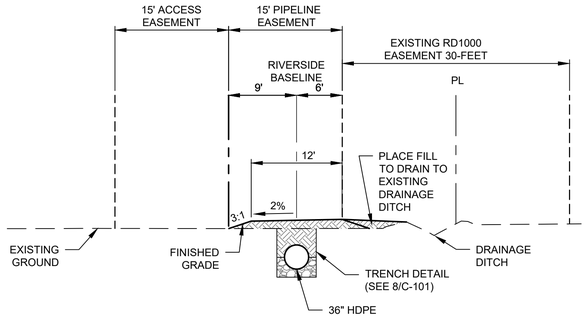

TYPICAL PIPELINE CROSS SECTION SOUTH OF FARM RD STA 247+25 TO 263+00

4 — 1" = 10'

0 5 10 20

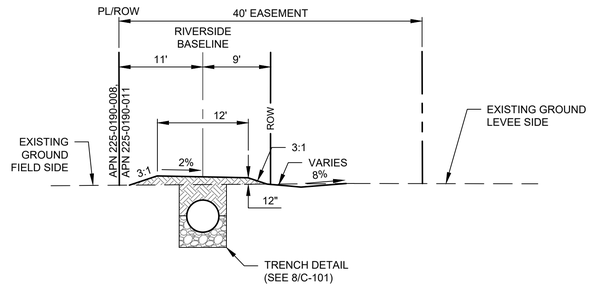

TYPICAL PIPELINE CROSS SECTION BETWEEN RADIO ROAD AND FARM ROAD

1 — 1" = 10'

0 5 10 20

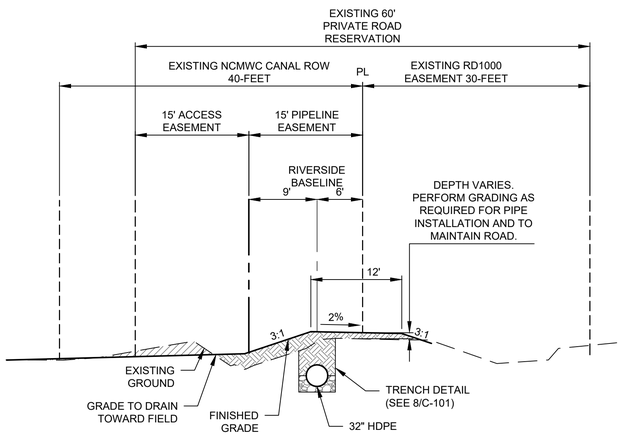

TYPICAL PIPELINE CROSS SECTION TREE ROAD STA 298+20 TO 302+45

8 — 1" = 10'

0 5 10 20

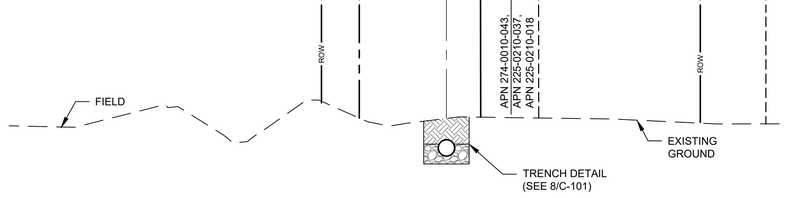

TYPICAL PIPELINE CROSS SECTION ALONG PARKER ROAD

5 — 1" = 10'

0 5 10 20

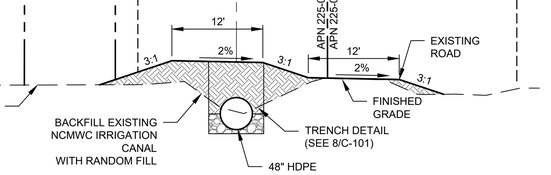

TYPICAL PIPELINE CROSS SECTION ALONG FARM ROAD

2 — 1" = 10'

0 5 10 20

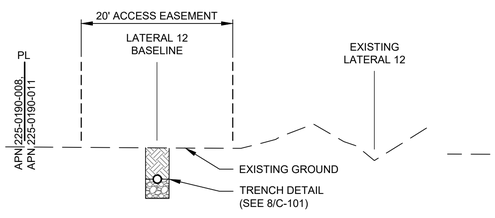

TYPICAL PIPELINE CROSS SECTION LATERAL 12 STA 3+50 TO 9+30

10 — 1" = 10'

0 5 10 20

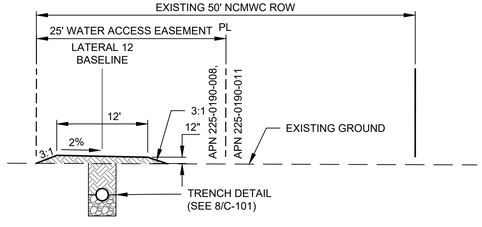

TYPICAL PIPELINE CROSS SECTION LATERAL 12 STA 1+35 TO 3+15

9 — 1" = 10'

0 5 10 20

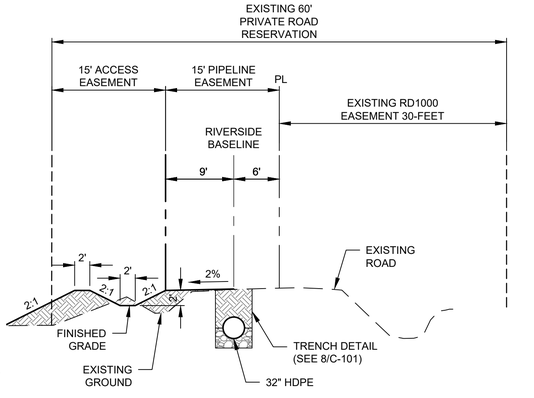

TYPICAL PIPELINE CROSS SECTION SOUTH OF PARKER ROAD STA 264+00 to 276+00

6 — 1" = 10'

0 5 10 20

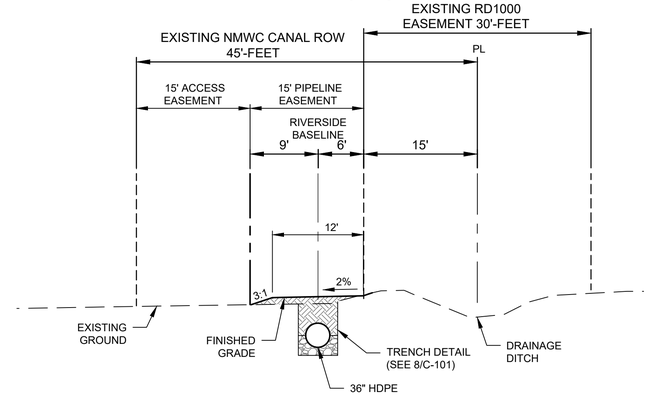

TYPICAL PIPELINE CROSS SECTION SOUTH OF FARM RD STA 235+50 TO 247+00

3 — 1" = 10'

0 5 10 20

US Army Corps of Engineers®

NO.	MARK	DESCRIPTION	DATE

DESIGNED BY: C. STIPEK
DRAWN BY: E. DIOCSON
CHECKED BY: S. SULLIVAN
SUBMITTED BY: J. KASHIWADA
SIZE: ANSI D
ISSUE DATE: 05/06/2019
SOLICITATION NO.:
CONTRACT NO.:
FILE NO: 1-04-0642
FILE NAME: C-102 TYPICAL SECTIONS
SPEC NO: 2122

U.S. ARMY CORPS OF ENGINEERS
SACRAMENTO DISTRICT

MEAD & HUNT, INC.
180 PROMENADE CIRCLE, SUITE 240
SACRAMENTO, CA 95834

AMERICAN RIVER COMMON FEATURES
NATOMAS BASIN REACH B
RIVERSIDE CANAL PHASE 2 RELOCATION PROJECT

TYPICAL SECTIONS

SHEET ID
C-102

X:\19941500\161390.01\TECH\CAD\Riverside Canal\C-102 TYPICAL SECTIONS.dwg

FINAL ISSUE FOR BID

RIVERSIDE ALIGNMENT POINT TABLE			
POINT NO.	NORTHING	EASTING	DESCRIPTION
11	1995952.493	6686866.230	POB
104	1981981.413	6691070.775	POE

RIVERSIDE ALIGNMENT LINE DATA		
LINE NO.	LENGTH	BEARING
L112	27.78	S14° 36' 05.84"E
L113	6.02	S14° 31' 25.60"E
L114	464.93	S15° 14' 12.59"E
L115	225.53	S15° 12' 07.21"E
L116	326.62	S13° 32' 06.91"E
L117	1619.69	S8° 31' 15.37"E
L119	24.91	N81° 27' 36.09"E
L120	93.70	S8° 31' 40.99"E
L121	110.82	S8° 42' 04.83"E
L122	1259.26	S8° 51' 05.61"E

RIVERSIDE ALIGNMENT LINE DATA		
LINE NO.	LENGTH	BEARING
L132	588.84	S8° 46' 57.34"E
L133	2437.50	S0° 37' 20.48"E
L134	83.19	S0° 37' 20.48"E
L135	61.99	S0° 37' 47.61"E
L136	890.88	N89° 46' 00.89"E
L137	12.90	S45° 16' 11.95"E
L138	1129.18	S13° 20' 17.08"W
L139	51.72	S9° 11' 17.59"E
L140	51.77	S35° 51' 03.91"W
L141	453.05	S13° 20' 17.08"W

RIVERSDIE ALIGNMENT CURVE TABLE				
CURVE NO.	LENGTH	RADIUS	DELTA	TANGENT
C2	160.24'	121.24'	75° 43' 31"	94.26
C3	160.38'	121.24'	75° 47' 42"	94.37
C4	550.82'	3552.75'	8° 52' 59"	275.96
C5	47.85'	32.68'	83° 54' 18"	29.37
C6	92.06'	90.00'	58° 36' 29"	50.51
C7	98.26'	125.00'	45° 02' 21"	51.83
C8	43.35'	90.00'	27° 35' 57"	22.11
C9	16.14'	80.00'	11° 33' 43"	8.10
C10	30.70'	80.00'	21° 59' 12"	15.54
C11	25.72'	80.00'	18° 25' 21"	12.97

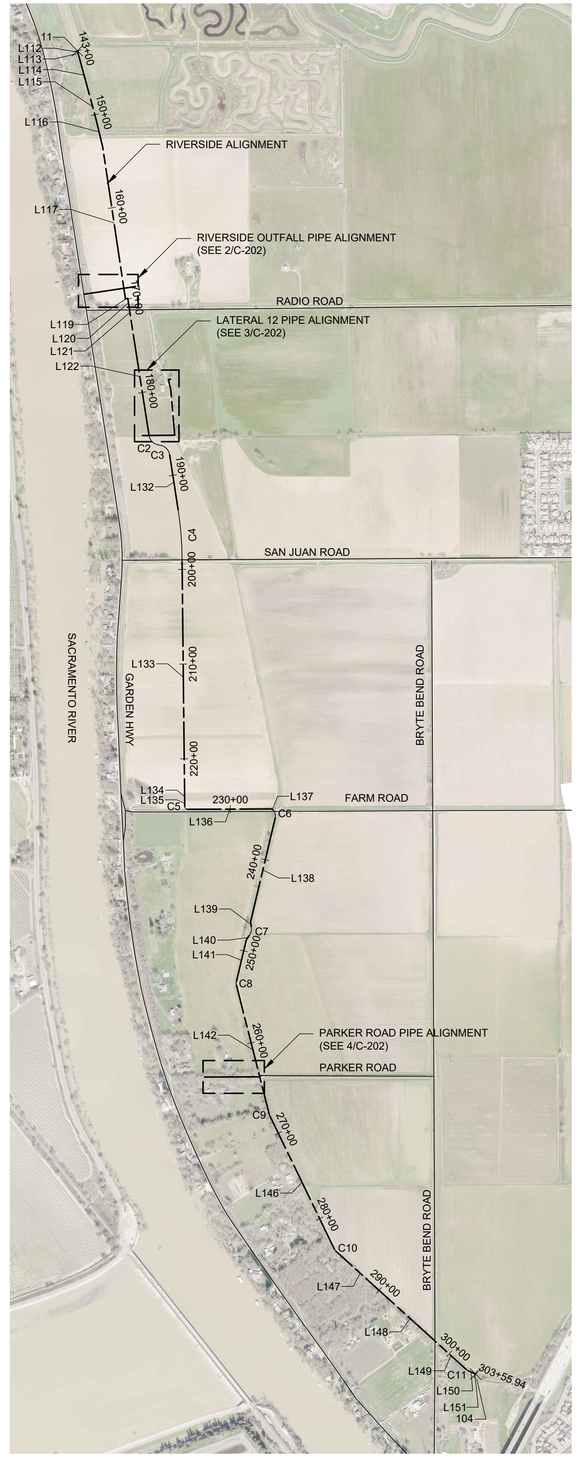

1 **RIVERSIDE ALIGNMENT**
1" = 800'
0 400 800 1600

US Army Corps of Engineers®

MARK	DESCRIPTION	DATE

DESIGNED BY: C. STEPPER
DRAWN BY: E. DIOCSON
CHECKED BY: S. SULLIVAN
SUBMITTED BY: J. KASHIWADA
SIZE: ANSI D
ISSUE DATE: 05/06/2019
SOLICITATION NO.:
CONTRACT NO.:
FILE NO: 1-04-0642
FILE NAME: CONTROL ALIGNMENTS.dwg
SPEC NO: 2122

U.S. ARMY CORPS OF ENGINEERS
SACRAMENTO DISTRICT

MEAD & HUNT, INC.
180 PROMENADE CIRCLE, SUITE 240
SACRAMENTO, CA 95834

AMERICAN RIVER COMMON FEATURES
NATOMAS BASIN REACH B
RIVERSIDE CANAL PHASE 2 RELOCATION PROJECT

CONTROL ALIGNMENTS

SHEET ID
C-201

X:\19415001\161390.01\TECH\CAD\Riverside Canal\CONTROL ALIGNMENTS.dwg

FINAL ISSUE FOR BID

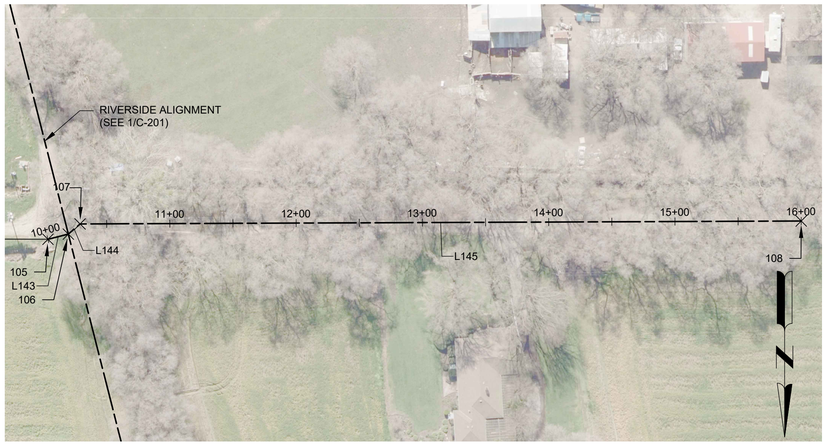

PARKER ROAD ALIGNMENT POINT TABLE			
POINT NO.	NORTHING	EASTING	DESCRIPTION
105	1985131.766	6688804.786	POB
108	1985117.306	6688208.295	POE

PARKER ROAD ALIGNMENT LINE DATA		
LINE NO.	LENGTH	BEARING
L143	16.63	S75° 44' 19.60"W
L144	12.30	S49° 10' 25.41"W
L145	571.08	S89° 46' 00.59"W

4 PARKER ROAD PIPELINE ALIGNMENT

1" = 60'

0 30 60 120

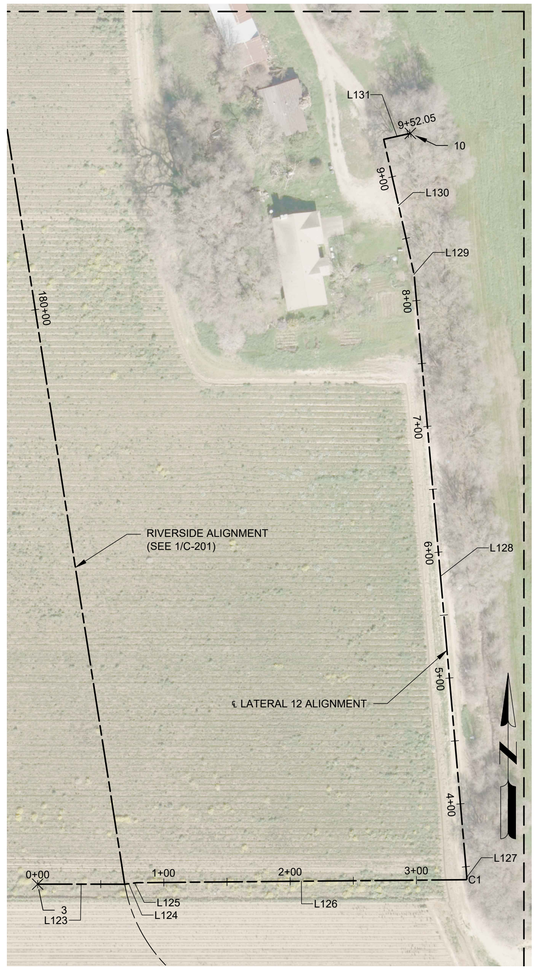

LATERAL 12 PIPE ALIGNMENT POINT TABLE			
POINT NO.	NORTHING	EASTING	DESCRIPTION
3	1991890.352	6687552.810	POB
10	1992484.869	6687847.904	POE

LATERAL 12 PIPE ALIGNMENT LINE DATA		
LINE NO.	LENGTH	BEARING
L123	68.94	S89° 59' 43.97"E
L124	6.39	N83° 12' 57.78"E
L125	3.06	N82° 16' 52.66"E
L126	261.03	N89° 28' 53.23"E
L127	2.65	N2° 45' 25.80"W
L128	475.94	N4° 59' 46.00"W
L129	4.03	N8° 50' 34.89"W
L130	107.59	N12° 41' 23.78"W
L131	21.61	N77° 18' 35.97"E

LATERAL 12 PIPE ALIGNMENT CURVE DATA				
CURVE NO.	LENGTH	RADIUS	DELTA	TANGENT
C1	0.82'	0.51'	92° 14' 19"	0.53

3 LATERAL 12 PIPE ALIGNMENT

1" = 60'

0 30 60 120

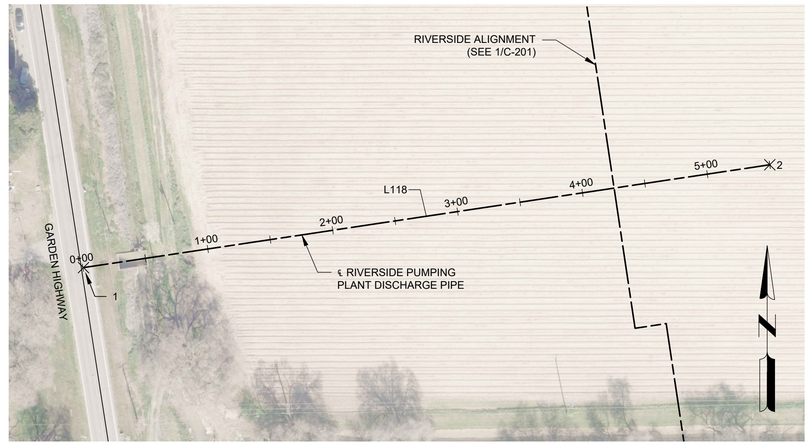

RIVERSIDE OUTFALL PIPE ALIGNMENT POINT TABLE			
POINT NO.	NORTHING	EASTING	DESCRIPTION
1	1993382.219	6686935.681	POB
2	1993463.647	6687479.168	POE

RIVERSIDE OUTFALL PIPE ALIGNMENT LINE DATA		
LINE NO.	LENGTH	BEARING
L118	550.00	N81° 28' 44.63"E

2 RIVERSIDE OUTFALL PIPE ALIGNMENT

1" = 60'

0 30 60 120

US Army Corps of Engineers®

MARK	DESCRIPTION	DATE

DESIGNED BY: C. STEPPE
DRAWN BY: E. DIOCSON
CHECKED BY: S. SULLIVAN
SUBMITTED BY: J. KASHIWADA
SIZE: ANSI D
ISSUE DATE: 05/06/2019
SOLICITATION NO.:
CONTRACT NO.:
FILE NO: 1-04-0642
FILE NAME: CONTROL ALIGNMENTS.dwg
SPEC NO: 2122

U.S. ARMY CORPS OF ENGINEERS
SACRAMENTO DISTRICT

MEAD & HUNT, INC.
180 PROMENADE CIRCLE, SUITE 240
SACRAMENTO, CA 95834

AMERICAN RIVER COMMON FEATURES
NATOMAS BASIN REACH B
RIVERSIDE CANAL PHASE 2 RELOCATION PROJECT

CONTROL ALIGNMENTS

SHEET ID

C-202

X:\19941500\161390.01\TECH\CAD\Riverside Canal\CONTROL ALIGNMENTS.dwg

FINAL ISSUE FOR BID

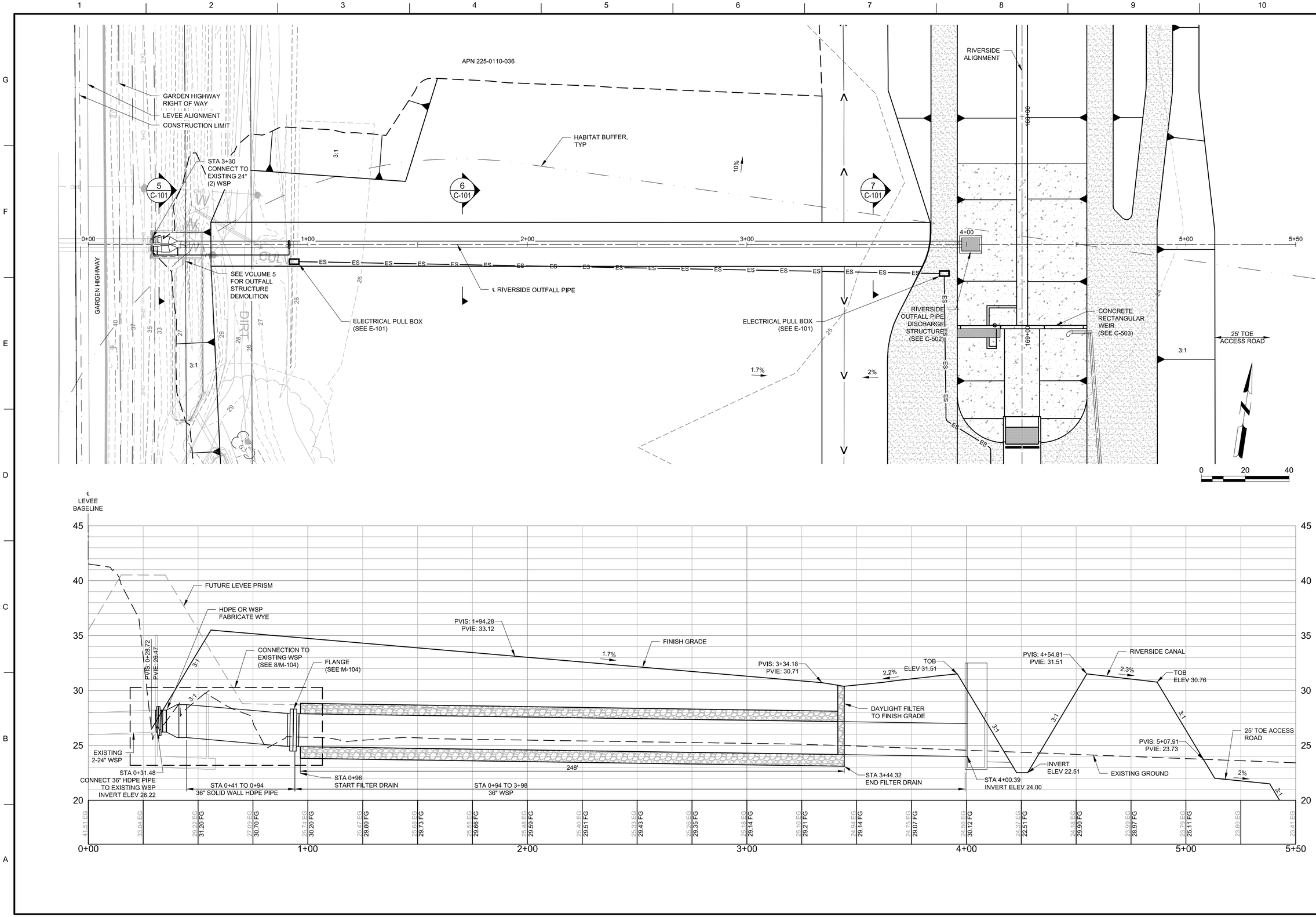

US Army Corps of Engineers®

DATE	DESCRIPTION	AUTHOR

DESIGNED BY: C. STEPPER	ISSUE DATE: 05/09/2019
DRAWN BY: J. HARRIS	SOLICITATION NO.:
CHECKED BY: S. SULLIVAN	CONTRACT NO.:
SUBMITTED BY: J. KASHIWADA	FILE NO: 1-04-0642
SIZE: ANSI D	SPEC NO: 2122
	FILE NAME: C-301 RIVERSIDE CANAL OUTFALL.dwg

U.S. ARMY CORPS OF ENGINEERS
SACRAMENTO DISTRICT

MEAD & HUNT, INC.
180 PROMENADE CIRCLE, SUITE 240
SACRAMENTO, CA 95834

AMERICAN RIVER COMMON FEATURES
NATOMAS BASIN REACH B
RIVERSIDE CANAL PHASE 2 RELOCATION PROJECT

RIVERSIDE OUTFALL PIPE

SHEET ID
C-301

X:\1941500\161390.01\TECH\CAD\Riverside Canal\C-301 RIVERSIDE CANAL OUTFALL.dwg

FINAL ISSUE FOR BID

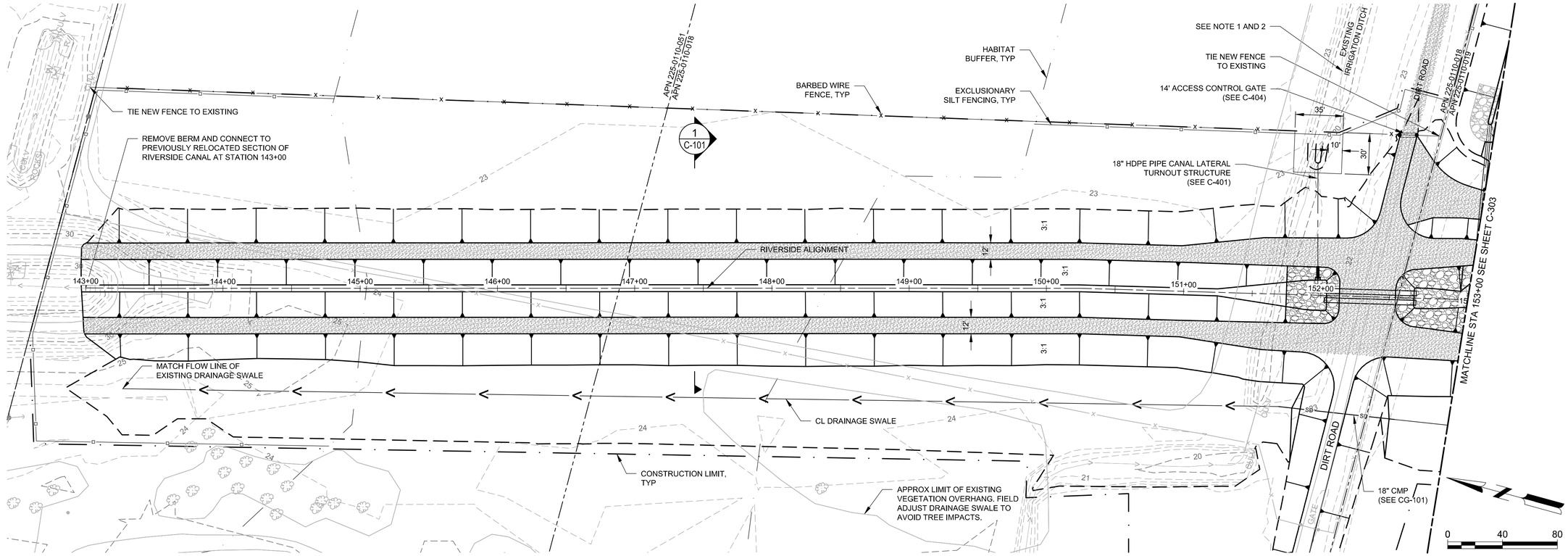

NOTES:

1. MAINTAIN IRRIGATION FLOWS THROUGH LATERAL CANALS OR PROVIDE TEMPORARY IRRIGATION SUPPLY AT A RATE OF 5 CFS WITH MINIMUM WATER SURFACE ELEVATION OF 21.5 AT OUTLET.
2. OVER EXCAVATE DITCH A MINIMUM OF 1' OR TO SUITABLE SUBGRADE AS DIRECTED BY THE CONTRACTING OFFICER.
3. CLEAR AND GRUB IN ACCORDANCE WITH SPECIFICATION SECTION 311100.
4. SEE CG-101 FOR DIRT ROAD CROSSING GRADING PLAN

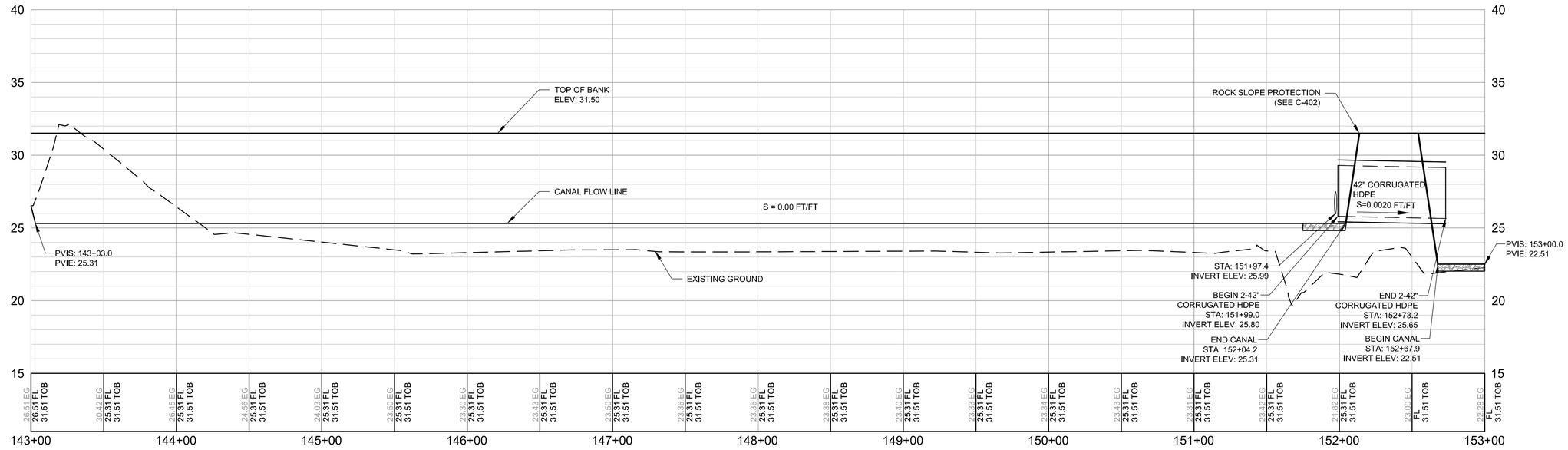

X:\19415OO\161390.01\TECH\CAD\Riverside Canal\1-04-0642CU703.dwg

FINAL ISSUE FOR BID

US Army Corps of Engineers®

MARK	DESCRIPTION	DATE

DESIGNED BY:	ISSUE DATE:
C. STEPPER	05/06/2019
DRAWN BY:	SOLICITATION NO.:
E. DIOCSON	
CHECKED BY:	CONTRACT NO.:
S. SULLIVAN	
SUBMITTED BY:	FILE NO:
J. KASHIWADA	1-04-0642
SIZE:	SPEC NO:
ANSI D	FILE NAME: 1-04-0642CU703.dwg

U.S. ARMY CORPS OF ENGINEERS
SACRAMENTO DISTRICT

MEAD & HUNT, INC.
180 PROMENADE CIRCLE, SUITE 240
SACRAMENTO, CA 95834

AMERICAN RIVER COMMON FEATURES
NATOMAS BASIN REACH B
RIVERSIDE CANAL PHASE 2 RELOCATION PROJECT

RIVERSIDE BASELINE PLAN AND PROFILE
STA 143+00 TO 153+00

SHEET ID

C-302

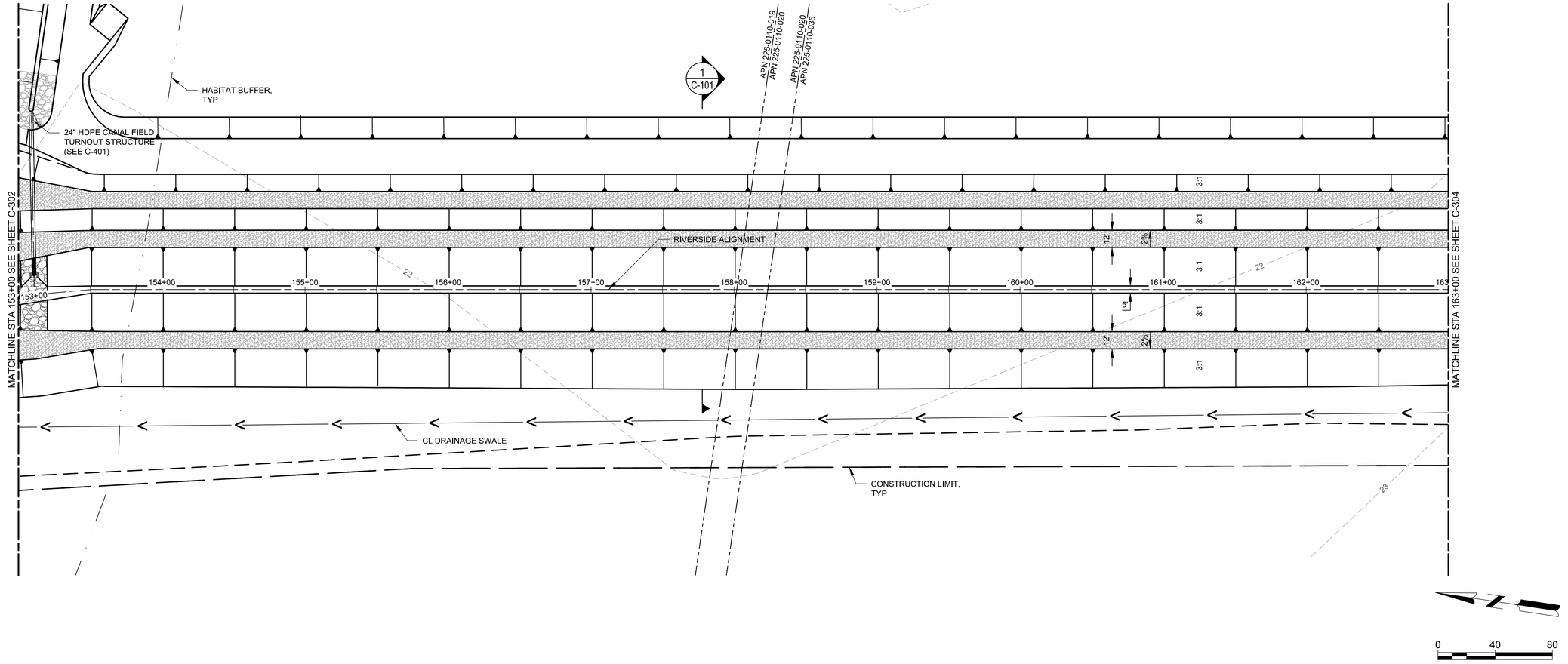

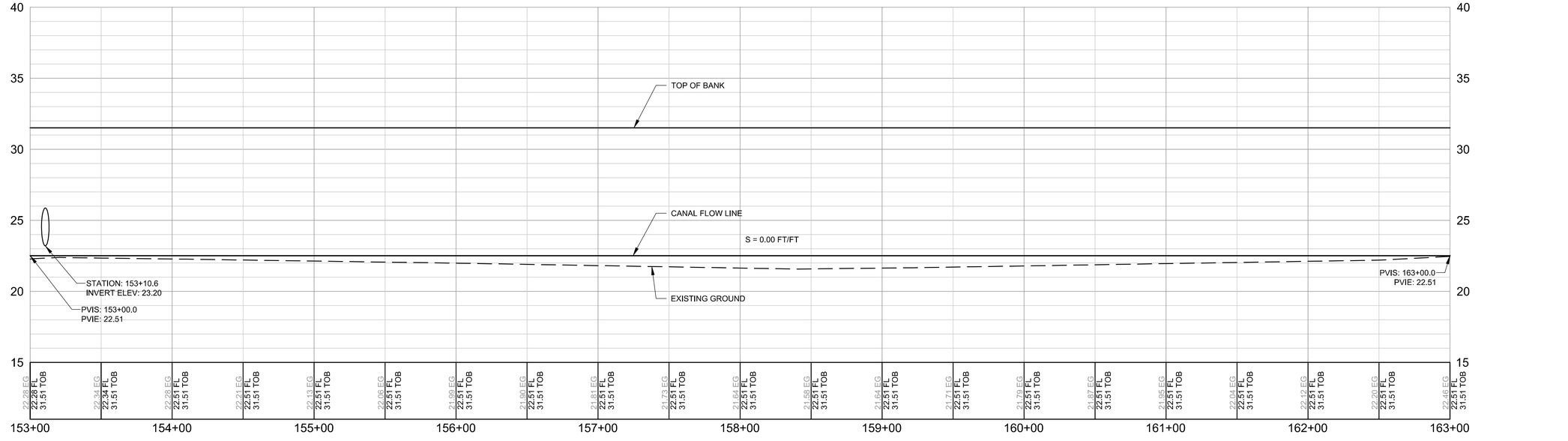

US Army Corps of Engineers®

MARK	DESCRIPTION	DATE

DESIGNED BY:	ISSUE DATE:
C. STEPPER	05/06/2019
DRAWN BY:	SOLICITATION NO.:
E. DIOCSON	
CHECKED BY:	CONTRACT NO.:
S. SULLIVAN	
SUBMITTED BY:	FILE NO:
J. KASHIWADA	1-04-0642
SIZE:	SPEC NO:
ANSI D	2122
	FILE NAME:
	1-04-0642CU703.dwg

U.S. ARMY CORPS OF ENGINEERS
SACRAMENTO DISTRICT

MEAD & HUNT, INC.
180 PROMENADE CIRCLE, SUITE 240
SACRAMENTO, CA 95834

AMERICAN RIVER COMMON FEATURES
NATOMAS BASIN REACH B
RIVERSIDE CANAL PHASE 2 RELOCATION PROJECT

RIVERSIDE BASELINE PLAN AND PROFILE
STA 153+00 TO 163+00

SHEET ID

C-303

X:\19415001\161390.01\TECH\CAD\Riverside Canal\1-04-0642CU703.dwg

FINAL ISSUE FOR BID

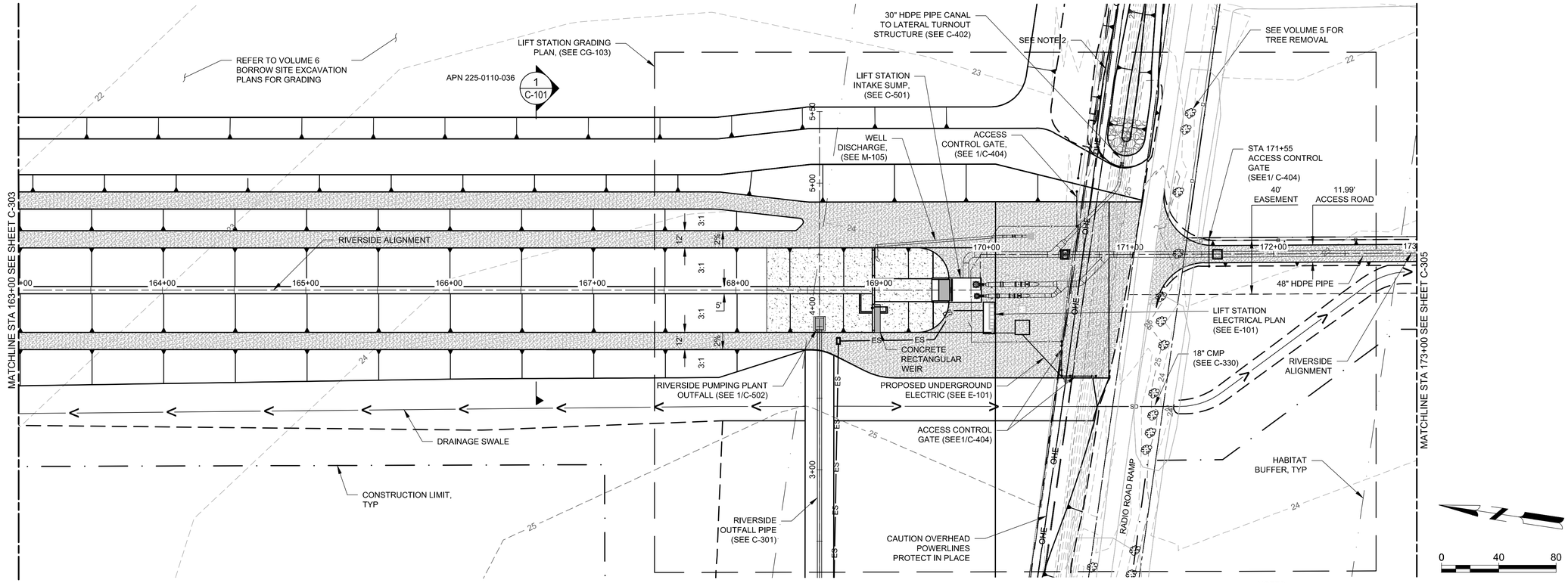

NOTES:

1. MAINTAIN IRRIGATION FLOWS THROUGH LATERAL CANALS OR PROVIDE TEMPORARY IRRIGATION SUPPLY AT A RATE OF 25 CFS WITH MINIMUM WATER SURFACE ELEVATION OF 24 AT OUTLET.
2. MAINTAIN ADEQUATE CLEARANCE BETWEEN EQUIPMENT AND OVERHEAD POWER LINES. LOCATION OF POWER LINES IS APPROXIMATE. ACTUAL LOCATION TO BE FIELD VERIFIED.
3. OVER EXCAVATE DITCH A MINIMUM OF 1' OR TO SUITABLE SUBGRADE AS DIRECTED BY THE CONTRACTING OFFICER.

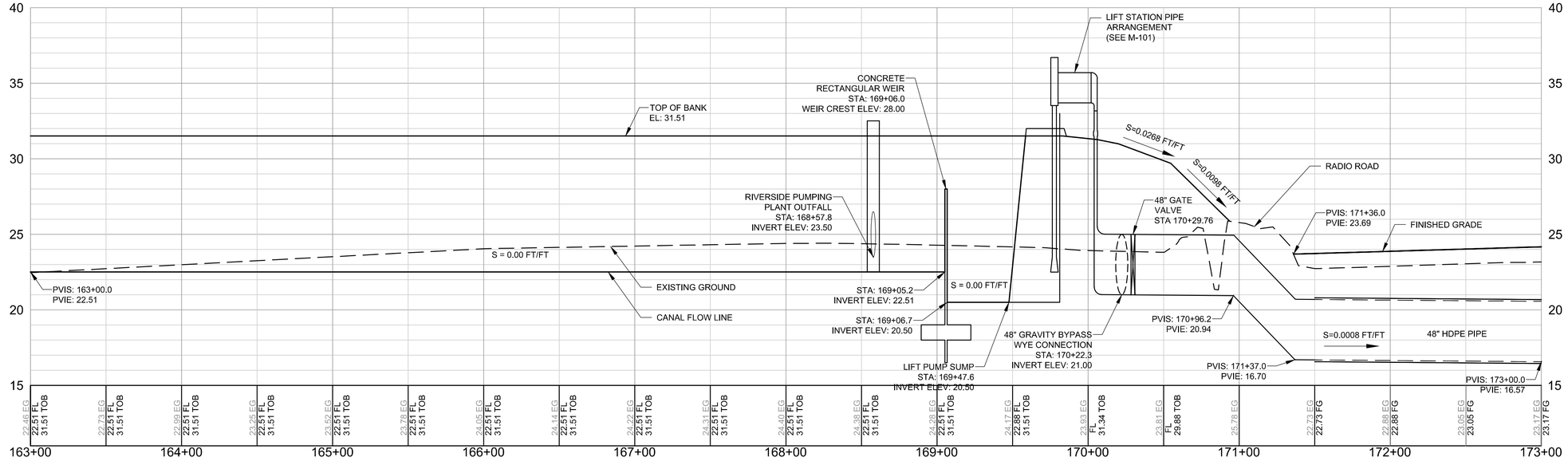

DESIGNED BY:	ISSUE DATE:
C. STEPPER	05/06/2019
DRAWN BY:	SOLICITATION NO.:
E. DIOCSON	
CHECKED BY:	CONTRACT NO.:
S. SULLIVAN	
SUBMITTED BY:	FILE NO:
J. KASHIWADA	1-04-0642
SIZE:	SPEC NO:
ANSI D	2122

MARK	DESCRIPTION	DATE

US Army Corps of Engineers®

U.S. ARMY CORPS OF ENGINEERS
SACRAMENTO DISTRICT

MEAD & HUNT, INC.
180 PROMENADE CIRCLE, SUITE 240
SACRAMENTO, CA 95834

AMERICAN RIVER COMMON FEATURES
NATOMAS BASIN REACH B
RIVERSIDE CANAL PHASE 2 RELOCATION PROJECT

RIVERSIDE BASELINE PLAN AND PROFILE STA 163+00 TO 173+00

SHEET ID

C-304

X:\1941500\161390.01\TECH\CAD\Riverside Canal\1-04-0642CU703.dwg

FINAL ISSUE FOR BID

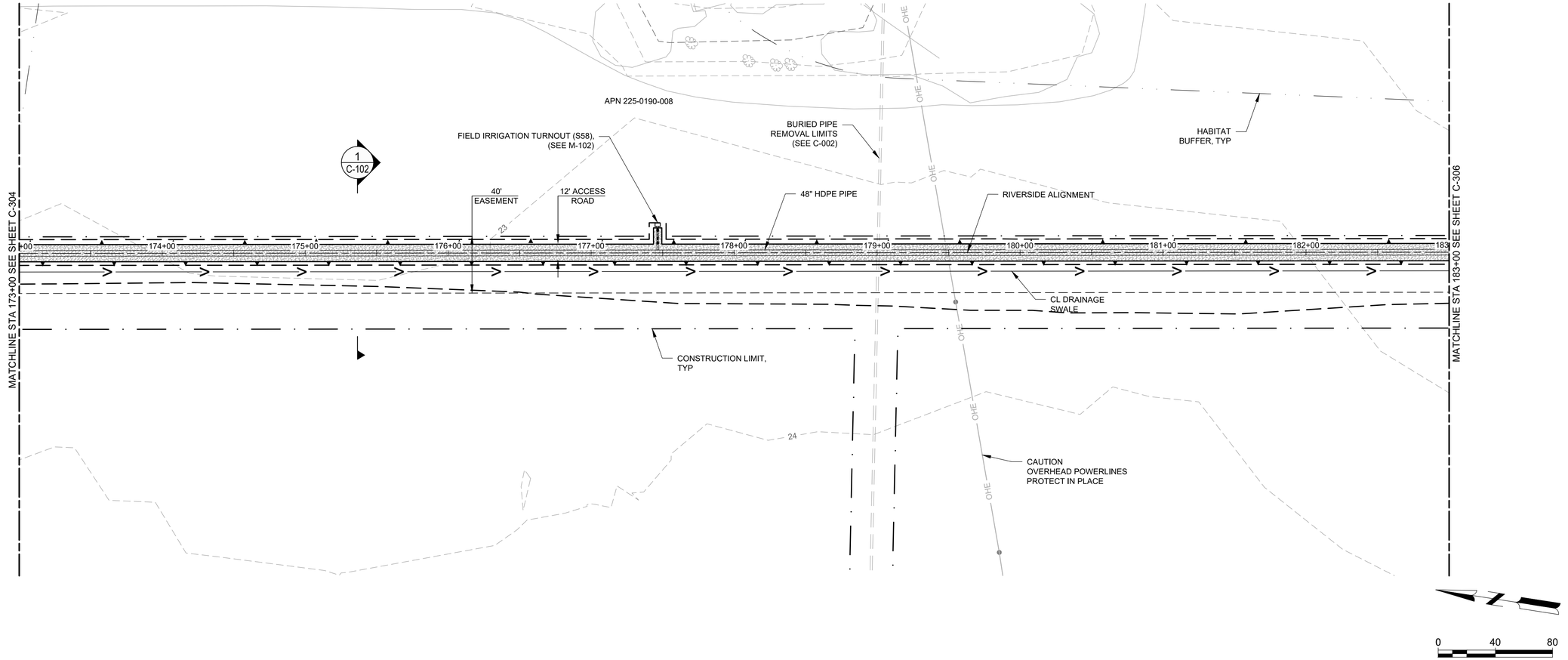

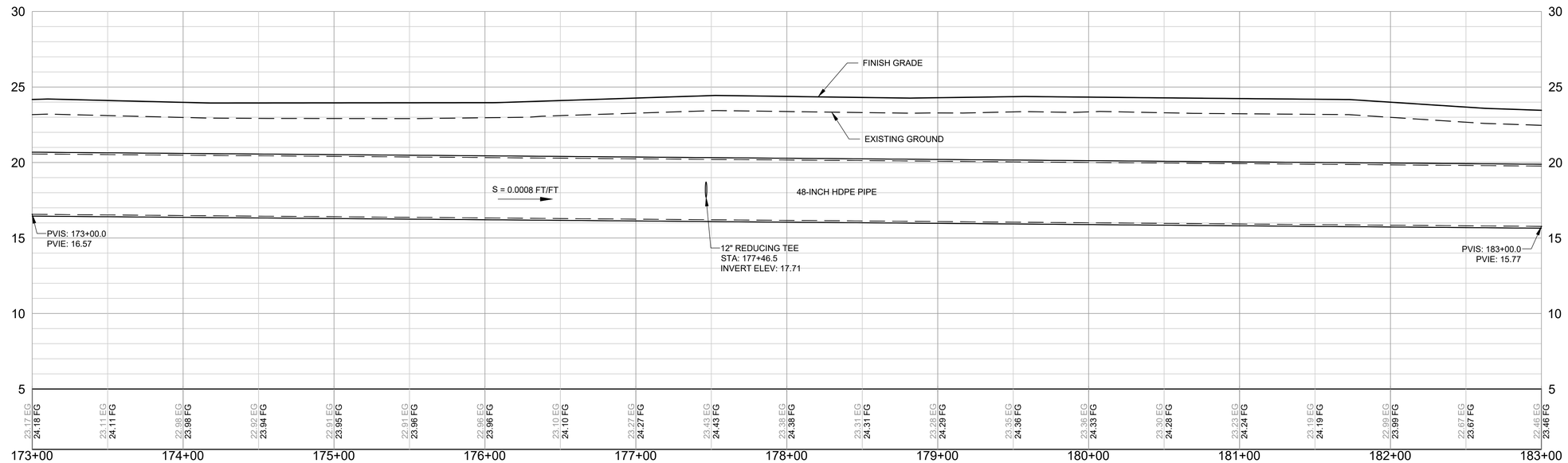

US Army Corps of Engineers®

MARK	DESCRIPTION	DATE

DESIGNED BY: C. STEPPER
DRAWN BY: E. DIOCSON
CHECKED BY: S. SULLIVAN
SUBMITTED BY: J. KASHIWADA
SIZE: ANSI D
ISSUE DATE: 05/06/2019
SOLICITATION NO.:
CONTRACT NO.:
FILE NO: 1-04-0642
FILE NAME: 1-04-0642CU703.dwg
SPEC NO: 2122

U.S. ARMY CORPS OF ENGINEERS
SACRAMENTO DISTRICT

MEAD & HUNT, INC.
180 PROMENADE CIRCLE, SUITE 240
SACRAMENTO, CA 95834

AMERICAN RIVER COMMON FEATURES
NATOMAS BASIN REACH B
RIVERSIDE CANAL PHASE 2 RELOCATION PROJECT

RIVERSIDE BASELINE PLAN AND PROFILE
STA 173+00 TO 183+00

SHEET ID
C-305

X:\19941500\161390.01\TECH\CAD\Riverside Canal\1-04-0642CU703.dwg

FINAL ISSUE FOR BID

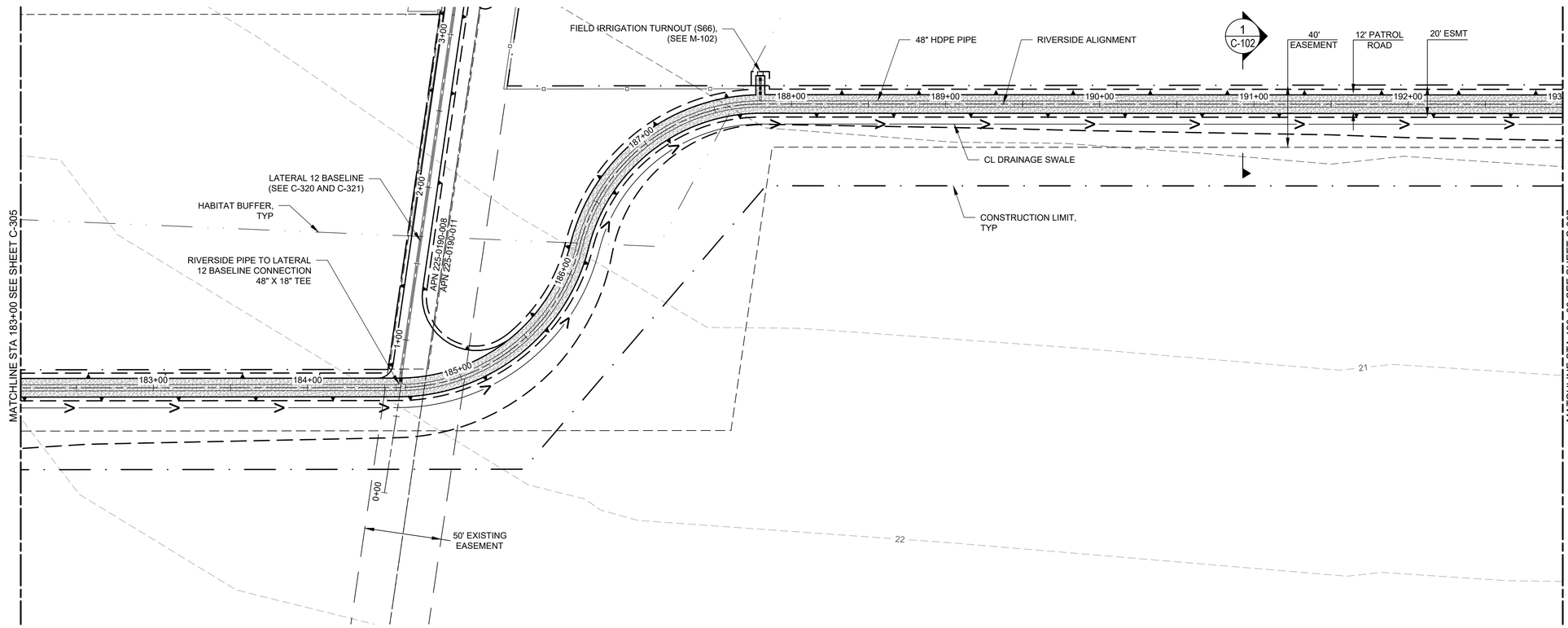

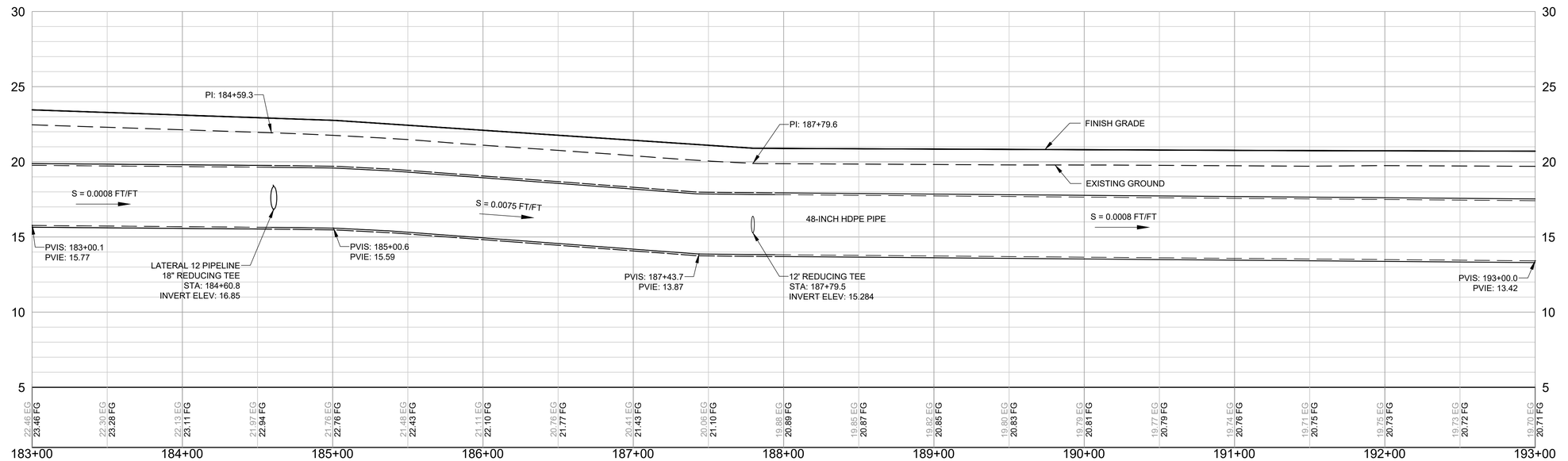

0 40 80

US Army Corps of Engineers®

MARK	DESCRIPTION	DATE

DESIGNED BY:	ISSUE DATE:
C. STEPPER	05/06/2019
DRAWN BY:	SOLICITATION NO.:
E. DIOCSON	
CHECKED BY:	CONTRACT NO.:
S. SULLIVAN	
SUBMITTED BY:	FILE NO:
J. KASHIWADA	1-04-0642
SIZE:	FILE NAME:
ANSI D	1-04-0642CU703.dwg

U.S. ARMY CORPS OF ENGINEERS
SACRAMENTO DISTRICT

MEAD & HUNT, INC.
180 PROMENADE CIRCLE, SUITE 240
SACRAMENTO, CA 95834

AMERICAN RIVER COMMON FEATURES
NATOMAS BASIN REACH B
RIVERSIDE CANAL PHASE 2 RELOCATION PROJECT

RIVERSIDE BASELINE PLAN AND PROFILE
STA 183+00 TO 193+00

SHEET ID

C-306

X:\19415001\161390.01\TECH\CAD\Riverside Canal\1-04-0642CU703.dwg

FINAL ISSUE FOR BID

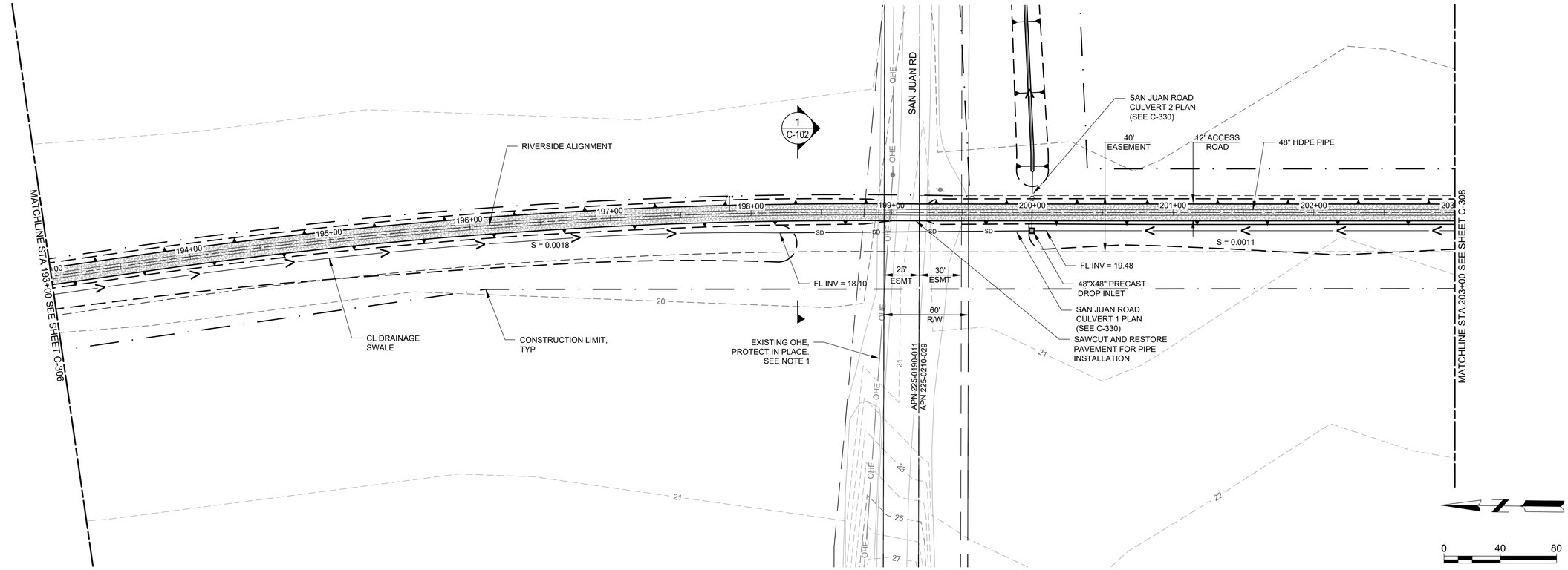

NOTE:

1. MAINTAIN ADEQUATE CLEARANCE BETWEEN EQUIPMENT AND OVERHEAD POWER LINES. LOCATION OF POWER LINES IS APPROXIMATE. ACTUAL LOCATION TO BE FIELD VERIFIED.

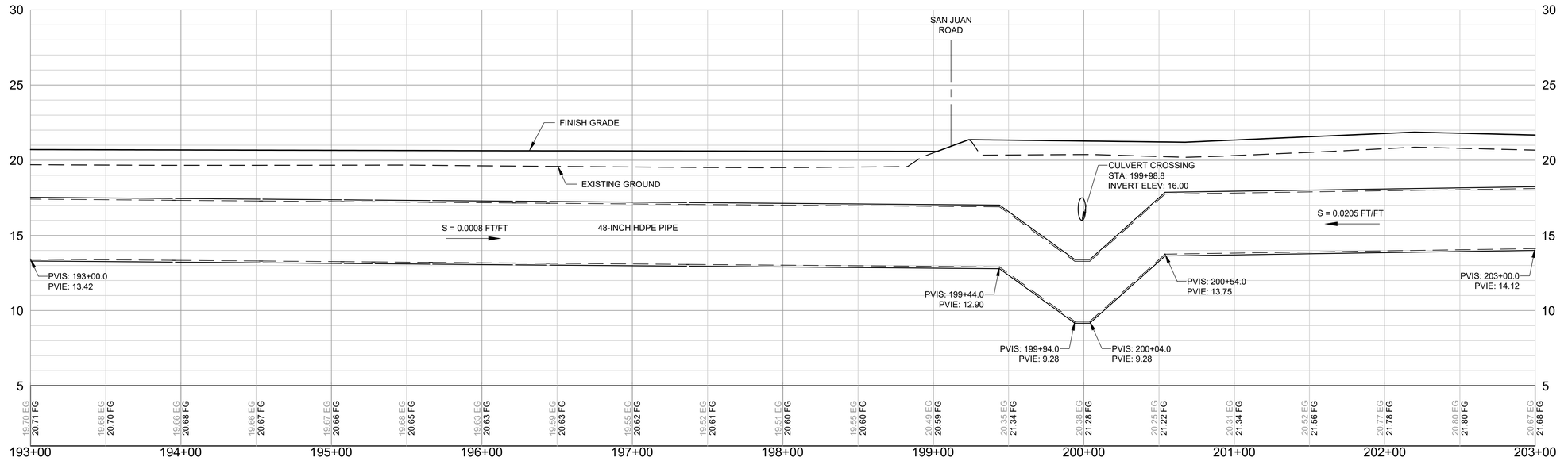

US Army Corps of Engineers®

MARK	DESCRIPTION	DATE

DESIGNED BY: C. STEPPER	ISSUE DATE: 05/06/2019
DRAWN BY: E. DIOCSON	SOLICITATION NO.:
CHECKED BY: S. SULLIVAN	CONTRACT NO.:
SUBMITTED BY: J. KASHIWADA	FILE NO: 1-04-0642
SIZE: ANSI D	SPEC NO: 21222
	FILE NAME: 1-04-0642CU703.dwg

U.S. ARMY CORPS OF ENGINEERS
SACRAMENTO DISTRICT

MEAD & HUNT, INC.
180 PROMENADE CIRCLE, SUITE 240
SACRAMENTO, CA 95834

AMERICAN RIVER COMMON FEATURES
NATOMAS BASIN REACH B
RIVERSIDE CANAL PHASE 2 RELOCATION PROJECT

RIVERSIDE BASELINE PLAN AND PROFILE
STA 193+00 TO 203+00

SHEET ID

C-307

X:\1941500\161390.01\TECH\CAD\Riverside Canal\1-04-0642CU703.dwg

FINAL ISSUE FOR BID

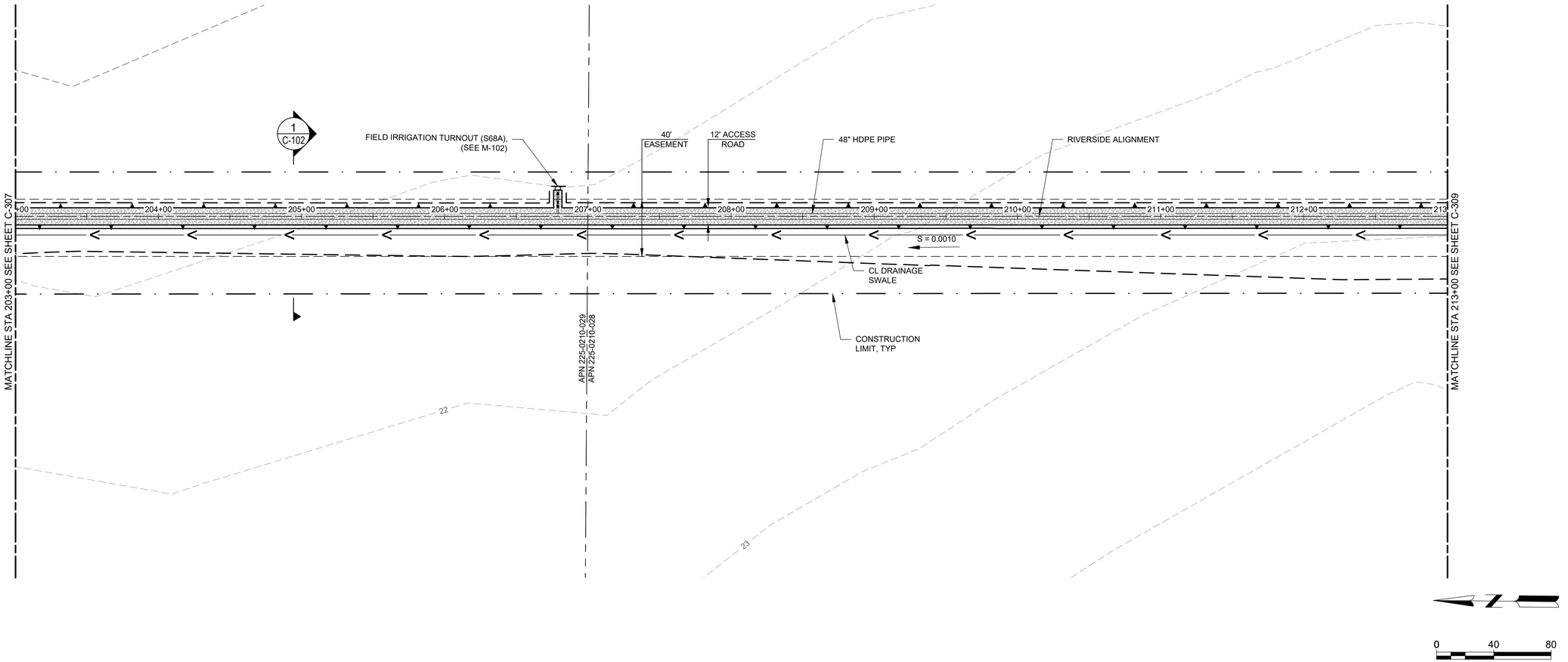

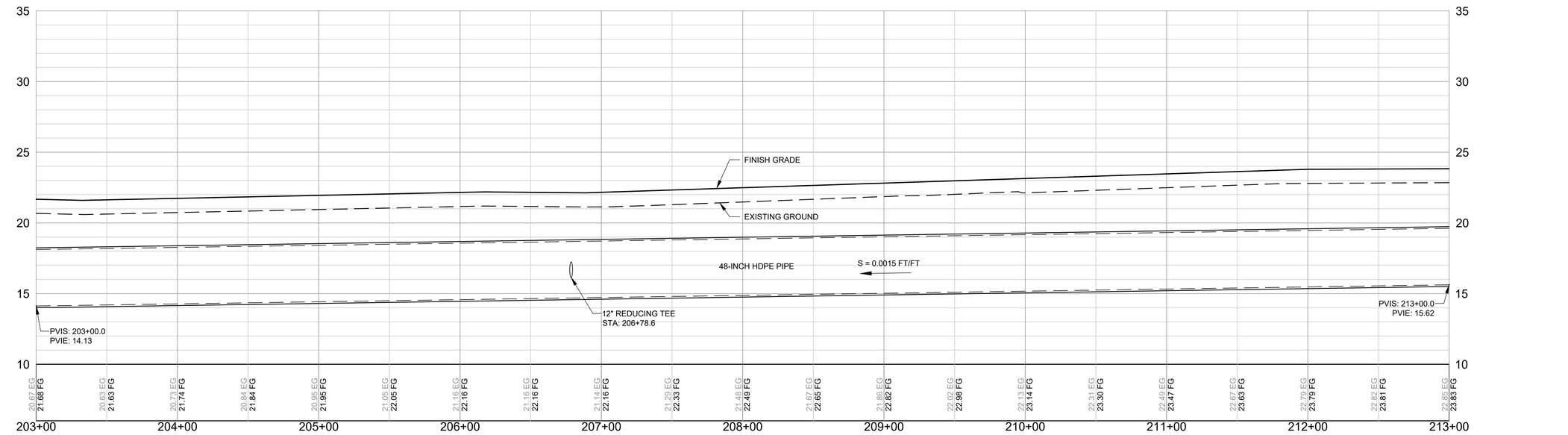

US Army Corps of Engineers®

MARK	DESCRIPTION	DATE

DESIGNED BY: C.STEPPER
DRAWN BY: E. DIOCSON
CHECKED BY: S. SULLIVAN
SUBMITTED BY: J. KASHIWADA
SIZE: ANSI D
ISSUE DATE: 09/06/2019
SOLICITATION NO.:
CONTRACT NO.:
FILE NO: 1-04-0642
FILE NAME: 1-04-0642CU703.dwg
SPEC NO: 2122

U.S. ARMY CORPS OF ENGINEERS
SACRAMENTO DISTRICT

MEAD & HUNT, INC.
180 PROMENADE CIRCLE, SUITE 240
SACRAMENTO, CA 95834

AMERICAN RIVER COMMON FEATURES
NATOMAS BASIN REACH B
RIVERSIDE CANAL PHASE 2 RELOCATION PROJECT

RIVERSIDE BASELINE PLAN AND PROFILE
STA 203+00 TO 213+00

SHEET ID
C-308

X:\19941500\161390.01\TECH\CAD\Riverside Canal\1-04-0642CU703.dwg

FINAL ISSUE FOR BID

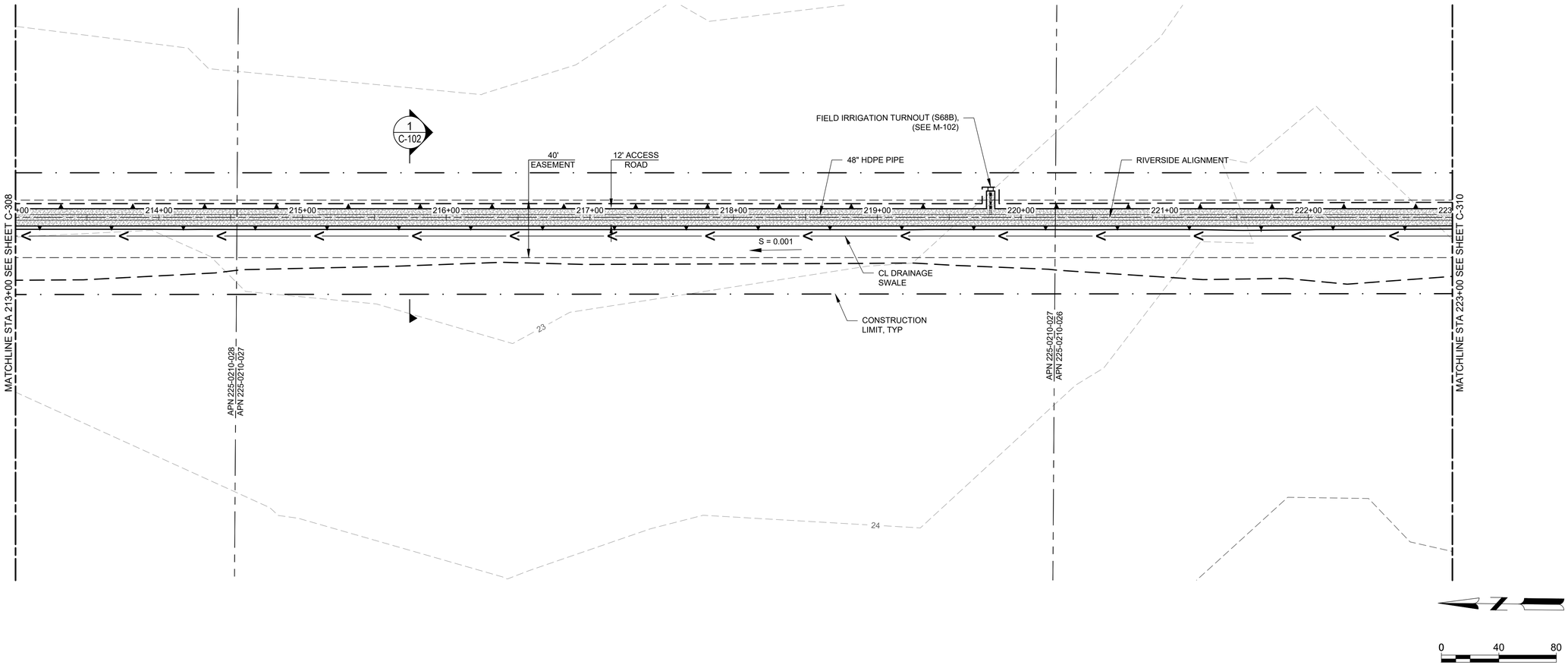

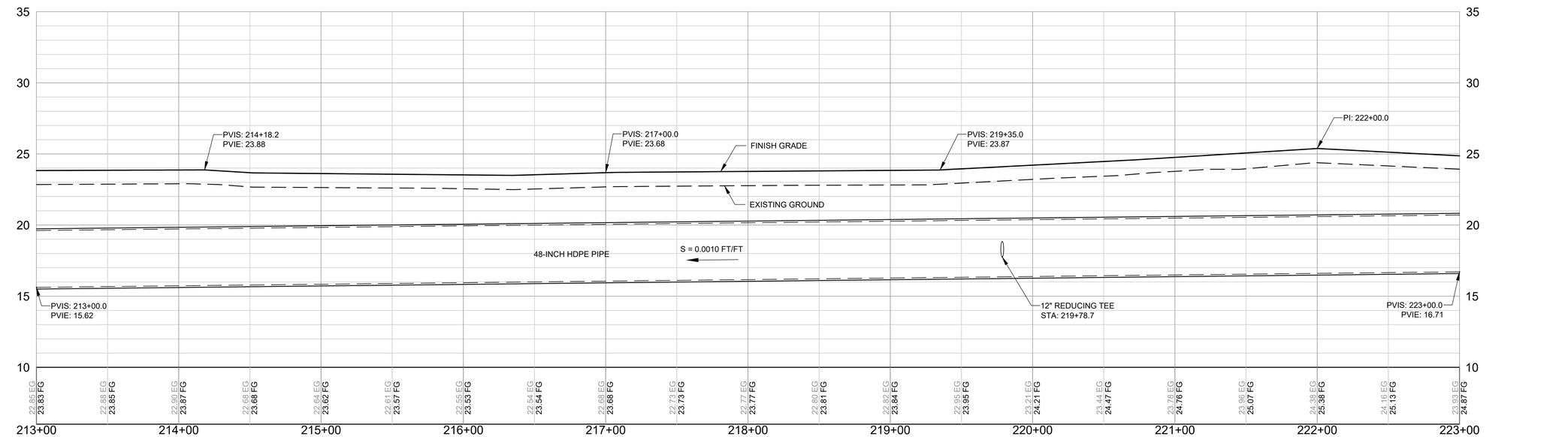

US Army Corps of Engineers®

MARK	DESCRIPTION	DATE

DESIGNED BY: C. STEPPER
DRAWN BY: E. DIOCSON
CHECKED BY: S. SULLIVAN
SUBMITTED BY: J. KASHIWADA
SIZE: ANSI D
ISSUE DATE: 05/06/2019
SOLICITATION NO.:
CONTRACT NO.:
FILE NO: 1-04-0642
FILE NAME: 1-04-0642CU703.dwg
SPEC NO: 2122

U.S. ARMY CORPS OF ENGINEERS
SACRAMENTO DISTRICT

MEAD & HUNT, INC.
180 PROMENADE CIRCLE, SUITE 240
SACRAMENTO, CA 95834

AMERICAN RIVER COMMON FEATURES
NATOMAS BASIN REACH B
RIVERSIDE CANAL PHASE 2 RELOCATION PROJECT

RIVERSIDE BASELINE PLAN AND PROFILE
STA 213+00 TO 223+00

SHEET ID
C-309

X:\19941500\161390.01\TECH\CAD\Riverside Canal\1-04-0642CU703.dwg

FINAL ISSUE FOR BID

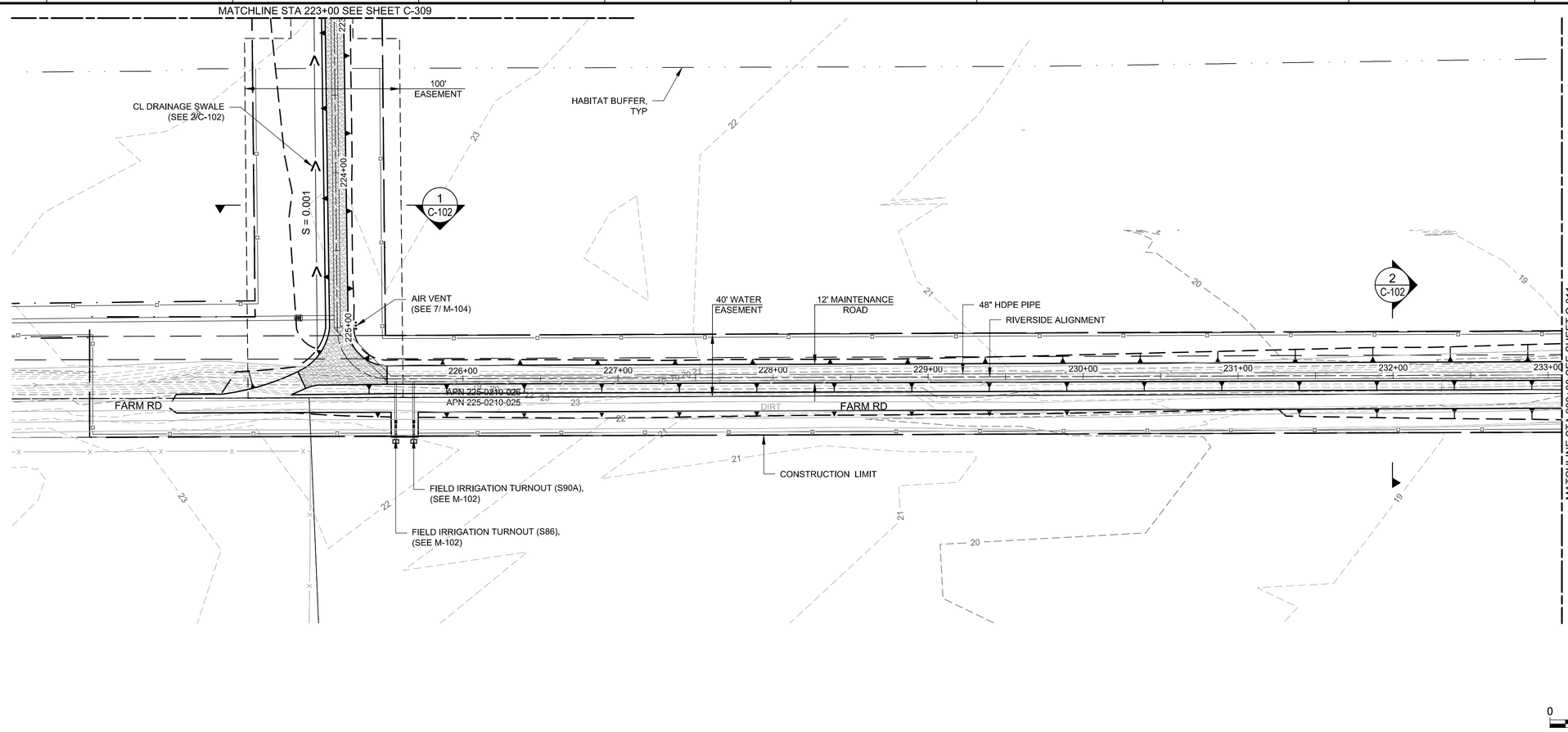

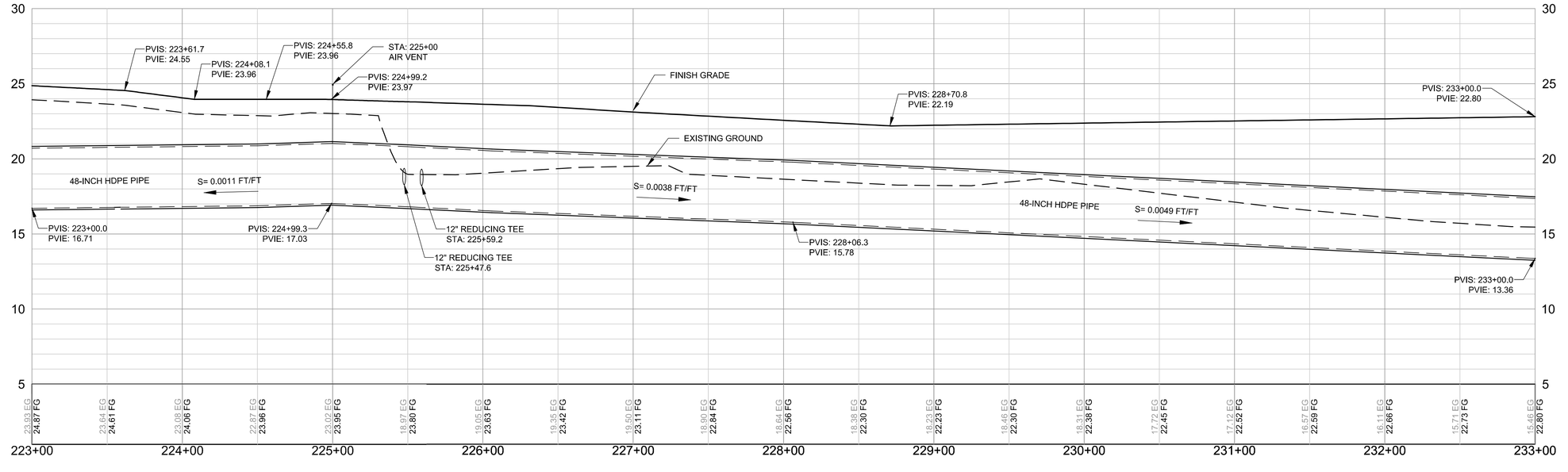

US Army Corps of Engineers®

MARK	DESCRIPTION	DATE

DESIGNED BY: C. STEPPER
DRAWN BY: E. DIOCSON
CHECKED BY: S. SULLIVAN
SUBMITTED BY: J. KASHIWADA
SIZE: ANSI D
ISSUE DATE: 05/06/2019
SOLICITATION NO.:
CONTRACT NO.:
FILE NO: 1-04-0642
FILE NAME: 1-04-0642CU703.dwg
SPEC NO: 2122

U.S. ARMY CORPS OF ENGINEERS
SACRAMENTO DISTRICT

MEAD & HUNT, INC.
180 PROMENADE CIRCLE, SUITE 240
SACRAMENTO, CA 95834

AMERICAN RIVER COMMON FEATURES
NATOMAS BASIN REACH B
RIVERSIDE CANAL PHASE 2 RELOCATION PROJECT

RIVERSIDE BASELINE PLAN AND PROFILE STA 223+00 TO 233+00

SHEET ID

C-310

X:\19941500\161390.01\TECH\CAD\Riverside Canal\1-04-0642CU703.dwg

FINAL ISSUE FOR BID

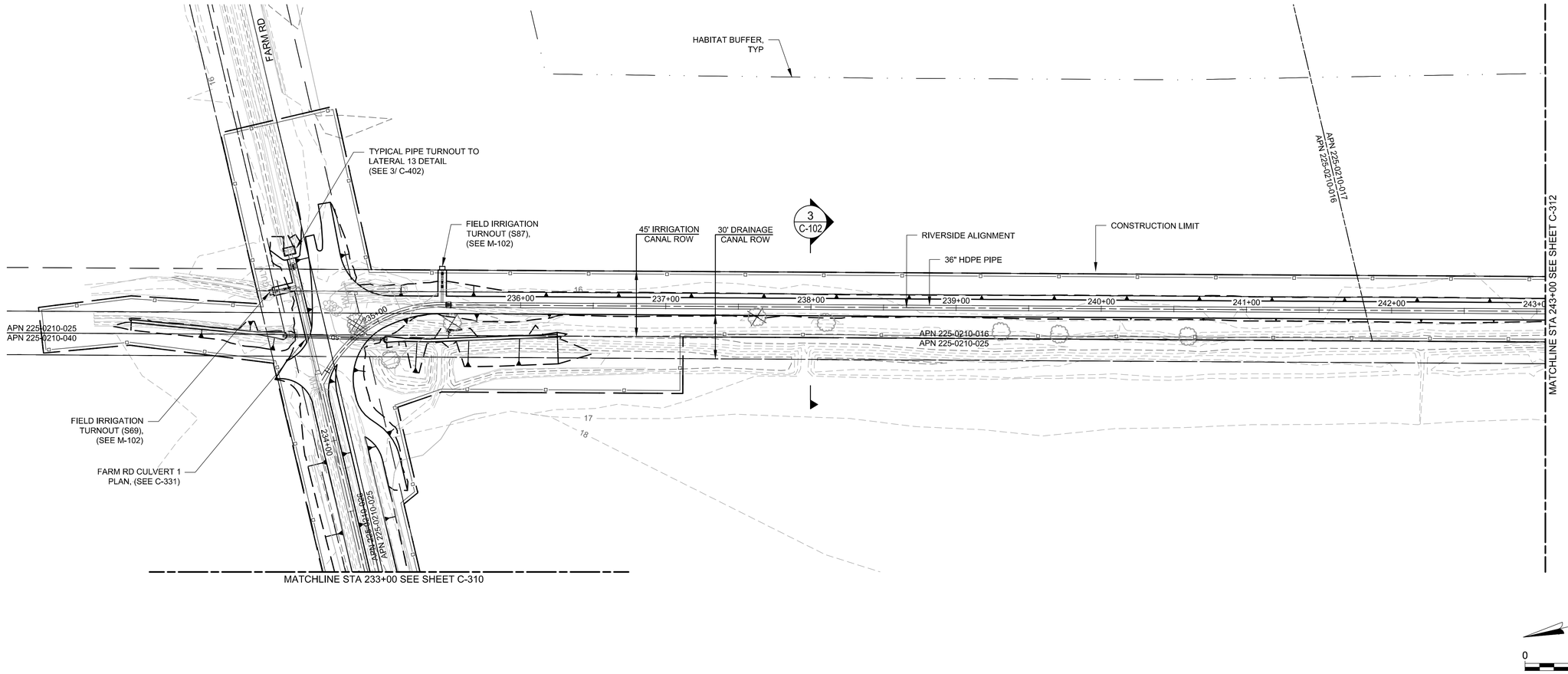

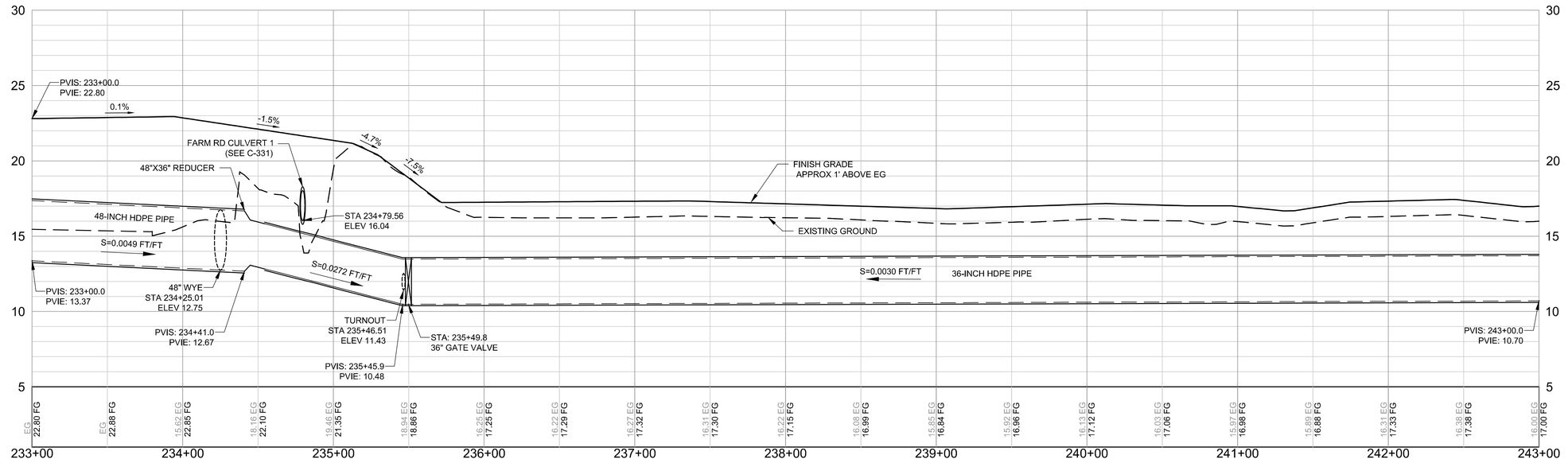

US Army Corps of Engineers®

MARK	DESCRIPTION	DATE

DESIGNED BY: C. STEPPER
DRAWN BY: E. DIOCSON
CHECKED BY: S. SULLIVAN
SUBMITTED BY: J. KASHIWADA
SIZE: ANSI D
ISSUE DATE: 05/06/2019
SOLICITATION NO.:
CONTRACT NO.:
FILE NO: 1-04-0642
FILE NAME: 1-04-0642CU703.dwg
SPEC NO.: 2122

U.S. ARMY CORPS OF ENGINEERS
SACRAMENTO DISTRICT

MEAD & HUNT, INC.
180 PROMENADE CIRCLE, SUITE 240
SACRAMENTO, CA 95834

AMERICAN RIVER COMMON FEATURES
NATOMAS BASIN REACH B
RIVERSIDE CANAL PHASE 2 RELOCATION PROJECT

RIVERSIDE BASELINE PLAN AND PROFILE STA 233+00 TO 243+00

SHEET ID
C-311

X:\19941500\161390.01\TECH\CAD\Riverside Canal\1-04-0642CU703.dwg

FINAL ISSUE FOR BID

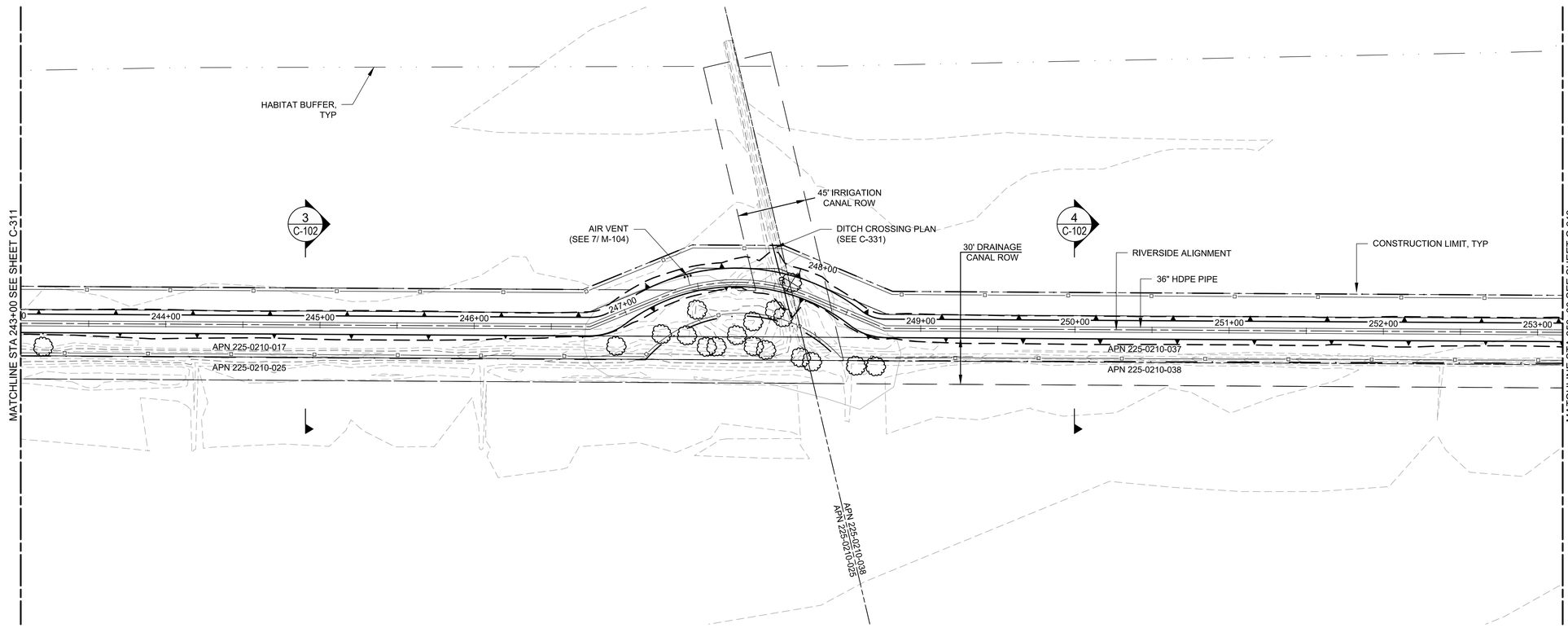

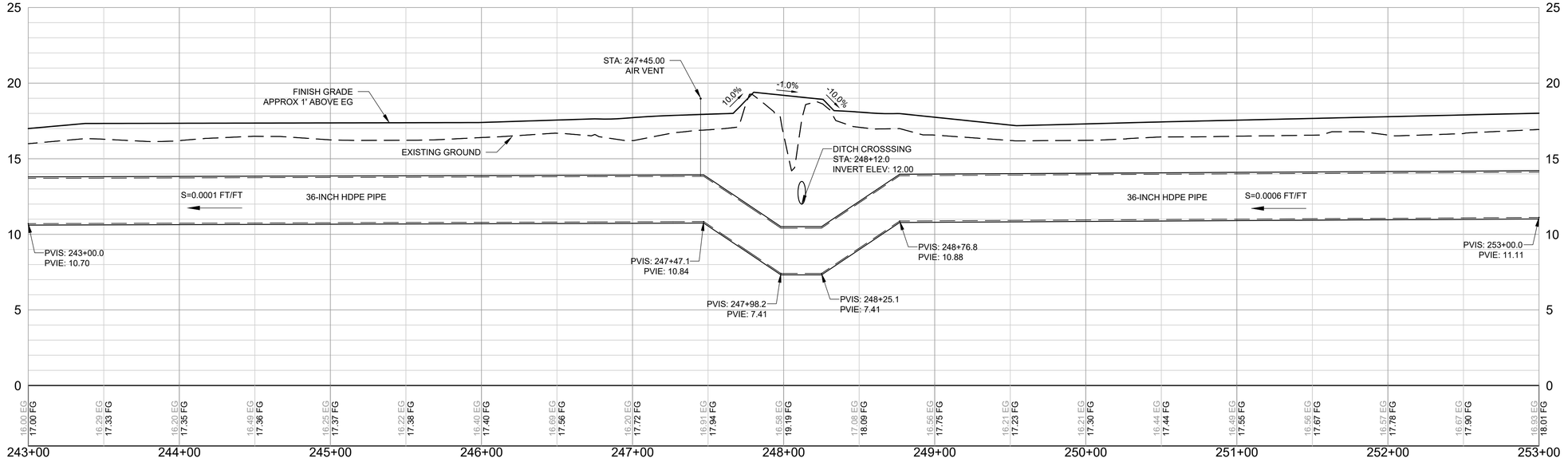

US Army Corps of Engineers®

MARK	DESCRIPTION	DATE

DESIGNED BY: C. STEPPER
DRAWN BY: E. DIOCSON
CHECKED BY: S. SULLIVAN
SUBMITTED BY: J. KASHIWADA
SIZE: ANSI D
ISSUE DATE: 05/06/2019
SOLICITATION NO.:
CONTRACT NO.:
FILE NO: 1-04-0642
FILE NAME: 1-04-0642CU703.dwg
SPEC NO: 2122

U.S. ARMY CORPS OF ENGINEERS
SACRAMENTO DISTRICT

MEAD & HUNT, INC.
180 PROMENADE CIRCLE, SUITE 240
SACRAMENTO, CA 95834

AMERICAN RIVER COMMON FEATURES
NATOMAS BASIN REACH B
RIVERSIDE CANAL PHASE 2 RELOCATION PROJECT

RIVERSIDE BASELINE PLAN AND PROFILE STA 243+00 TO 253+00

SHEET ID

C-312

X:\19941500\161390.01\TECH\CAD\Riverside Canal\1-04-0642CU703.dwg

FINAL ISSUE FOR BID

CG-103

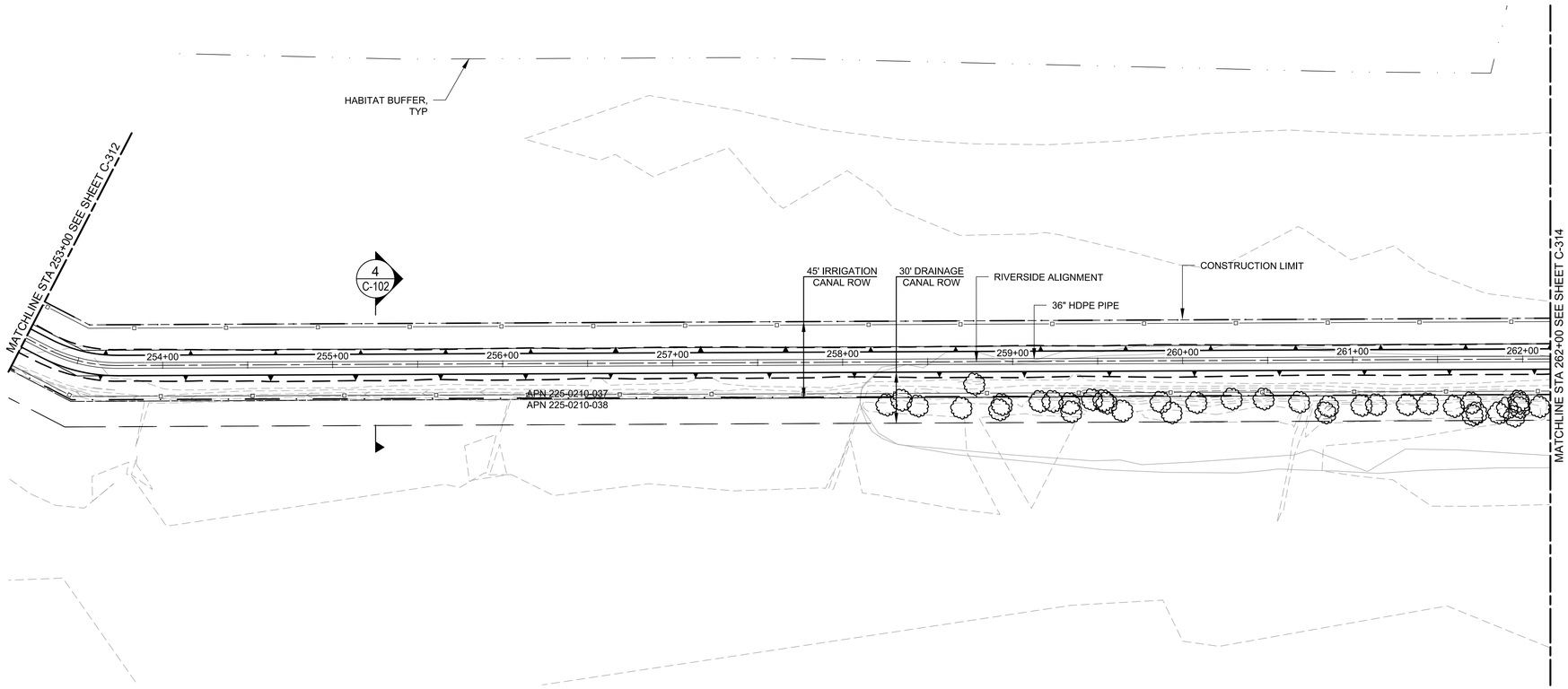

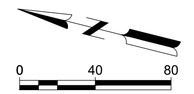

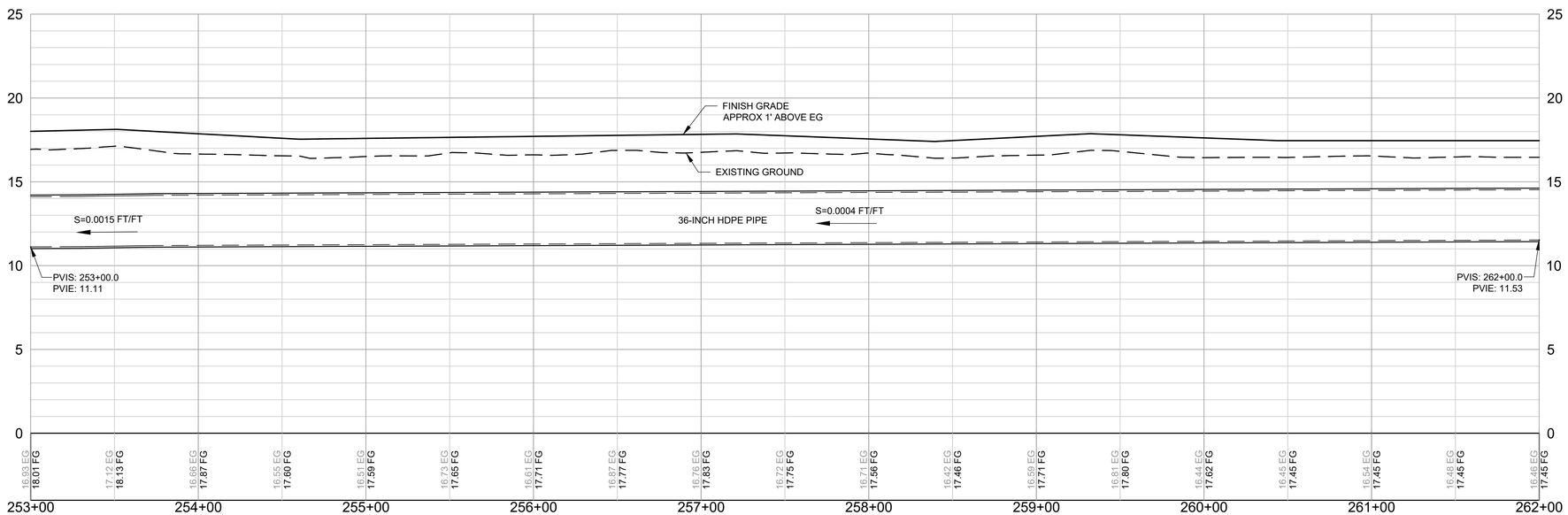

US Army Corps of Engineers®

MARK	DESCRIPTION	DATE

DESIGNED BY:	C. STEPPER
DRAWN BY:	E. DIOCSON
CHECKED BY:	S. SULLIVAN
SUBMITTED BY:	LASHINSKE
SIZE:	ANSI D
ISSUE DATE:	05/09/2019
SOLICITATION NO.:	
CONTRACT NO.:	
FILE NO.:	1-04-0642
FILE NAME:	1-04-0642CU703.dwg
SPEC NO:	2122

U.S. ARMY CORPS OF ENGINEERS
SACRAMENTO DISTRICT

MEAD & HUNT, INC.
180 PROMENADE CIRCLE, SUITE 240
SACRAMENTO, CA 95834

AMERICAN RIVER COMMON FEATURES
NATOMAS BASIN REACH B
RIVERSIDE CANAL PHASE 2 RELOCATION PROJECT

RIVERSIDE BASELINE PLAN AND PROFILE STA 253+00 TO 262+00

SHEET ID

C-313

X:\1941500\161390.01\TECH\CAD\Riverside Canal\1-04-0642CU703.dwg

FINAL ISSUE FOR BID

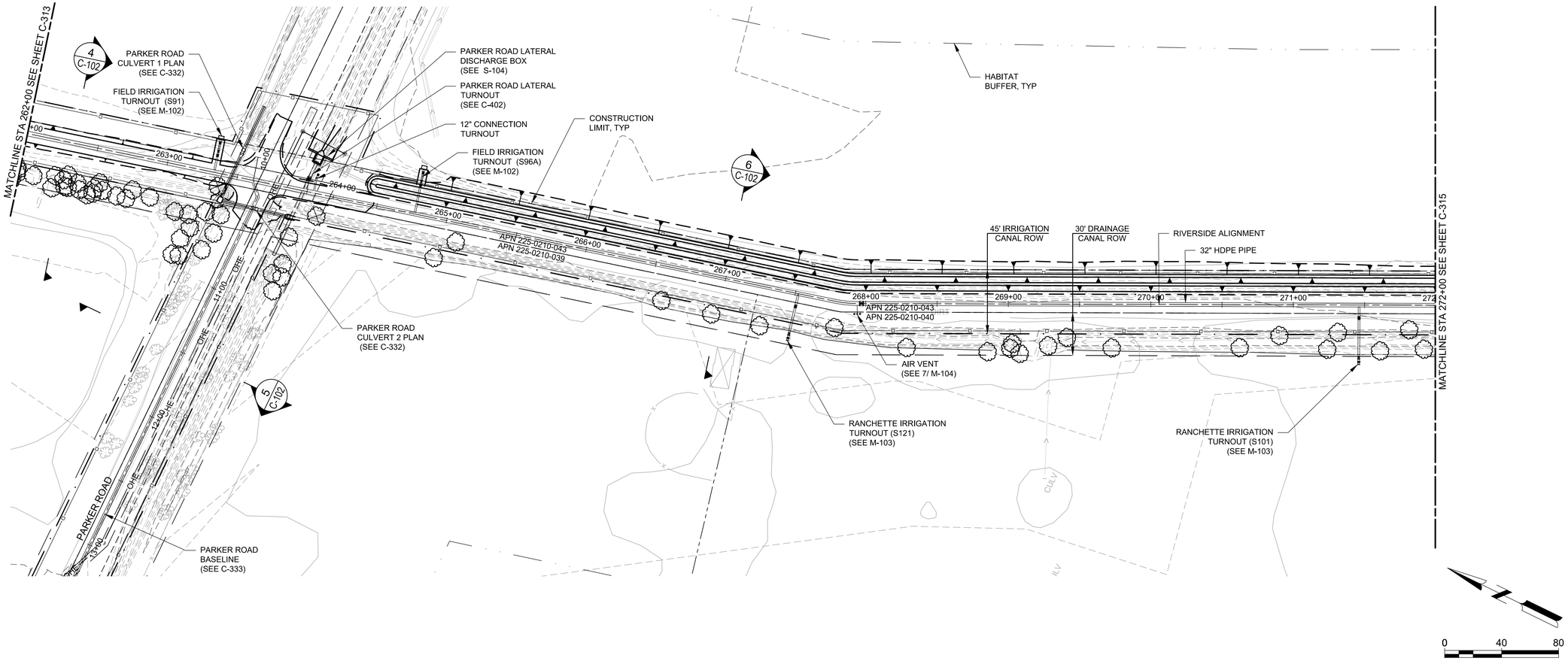

US Army Corps of Engineers®

MARK	DESCRIPTION	DATE

DESIGNED BY: C. STEPPER
DRAWN BY: E. DIOCSON
CHECKED BY: S. SULLIVAN
SUBMITTED BY: J. KASHIWADA
SIZE: ANSI D
ISSUE DATE: 05/06/2019
SOLICITATION NO.:
CONTRACT NO.:
FILE NO: 1-04-0642
FILE NAME: 1-04-0642CU703.dwg
SPEC NO: 2122

U.S. ARMY CORPS OF ENGINEERS
SACRAMENTO DISTRICT

MEAD & HUNT, INC.
180 PROMENADE CIRCLE, SUITE 240
SACRAMENTO, CA 95834

AMERICAN RIVER COMMON FEATURES
NATOMAS BASIN REACH B
RIVERSIDE CANAL PHASE 2 RELOCATION PROJECT

RIVERSIDE BASELINE PLAN AND PROFILE STA 262+00 TO 272+00

SHEET ID

C-314

X:\19941500\161390.01\TECH\CAD\Riverside Canal\1-04-0642CU703.dwg

FINAL ISSUE FOR BID

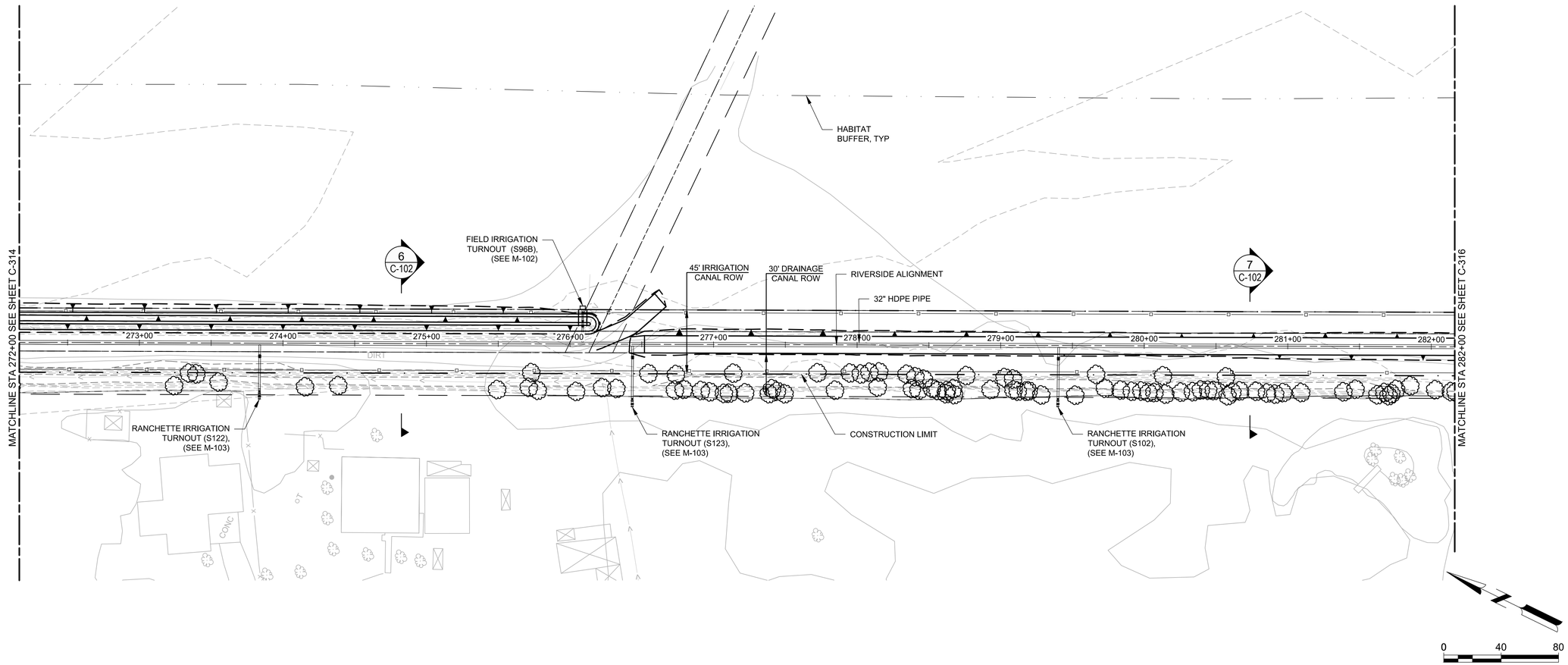

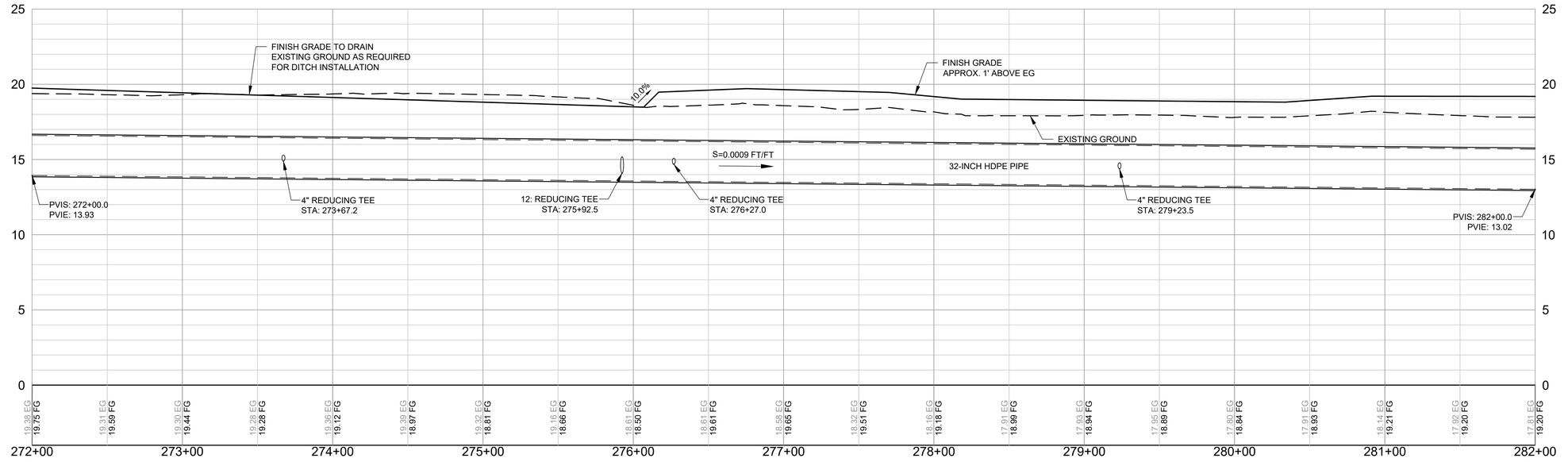

MARK	DESCRIPTION	DATE

DESIGNED BY: C. STEPPER
DRAWN BY: E. DIOCSON
CHECKED BY: S. SULLIVAN
SUBMITTED BY: J. KASHIWADA
SIZE: ANSI D
ISSUE DATE: 05/06/2013
SOLICITATION NO.:
CONTRACT NO.:
FILE NO: 1-04-0642
FILE NAME: 1-04-0642CU703.dwg
SPEC NO: 2122

U.S. ARMY CORPS OF ENGINEERS
SACRAMENTO DISTRICT

MEAD & HUNT, INC.
180 PROMENADE CIRCLE, SUITE 240
SACRAMENTO, CA 95834

AMERICAN RIVER COMMON FEATURES
NATOMAS BASIN REACH B
RIVERSIDE CANAL PHASE 2 RELOCATION PROJECT

RIVERSIDE BASELINE PLAN AND PROFILE
STA 272+00 TO 282+00

SHEET ID

C-315

X:\19941500\161390.01\TECH\CAD\Riverside Canal\1-04-0642CU703.dwg

FINAL ISSUE FOR BID

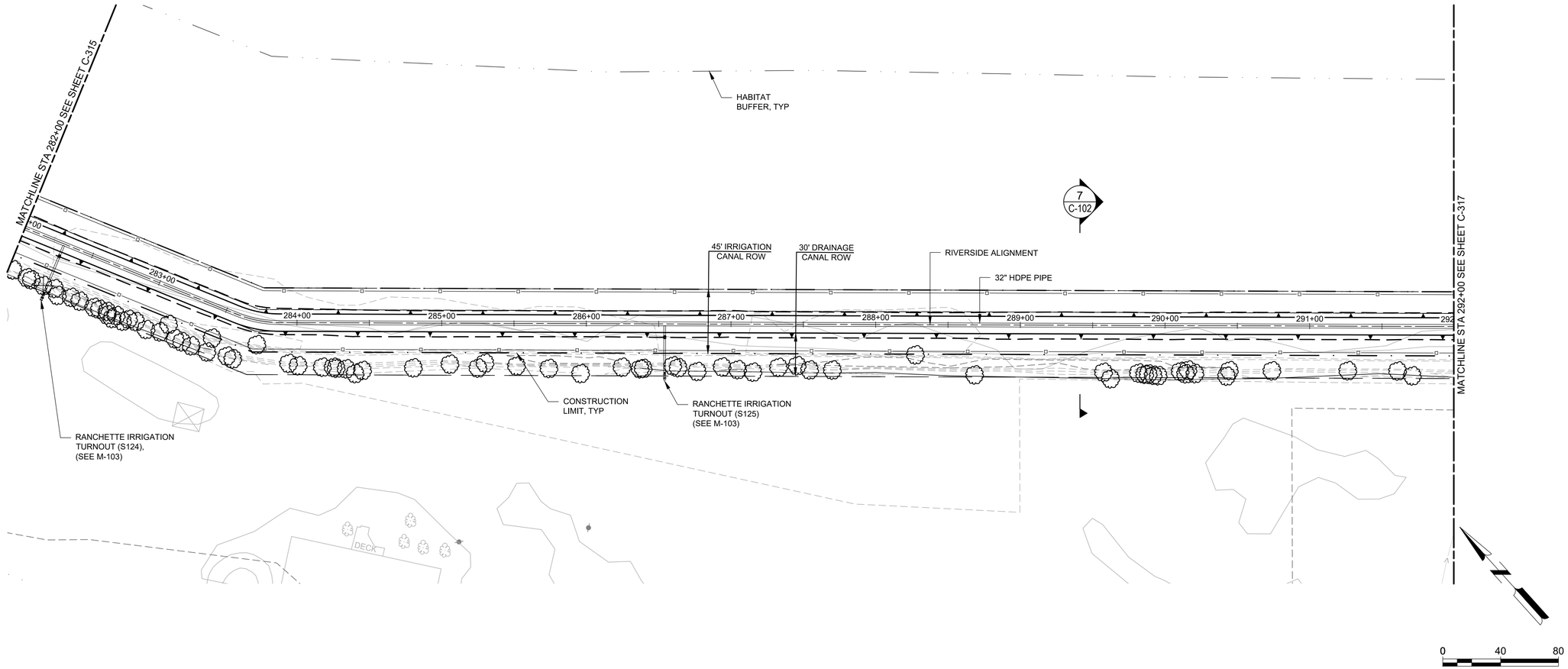

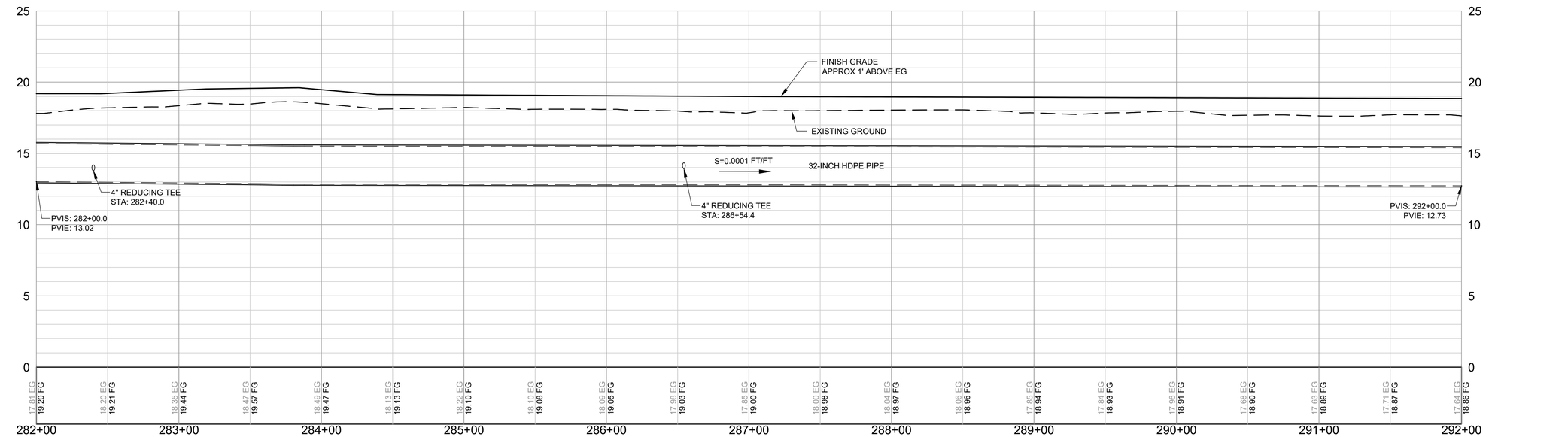

X:\19941500\161390.01\TECH\CAD\Riverside Canal\1-04-0642CU703.dwg

FINAL ISSUE FOR BID

US Army Corps of Engineers®

MARK	DESCRIPTION	DATE

DESIGNED BY: C. STEPPER
DRAWN BY: E. DIOCSON
CHECKED BY: S. SULLIVAN
SUBMITTED BY: J. KASHIWADA
SIZE: ANSI D
ISSUE DATE: 05/06/2019
SOLICITATION NO.:
CONTRACT NO.:
FILE NO: 1-04-0642
FILE NAME: 1-04-0642CU703.dwg
SPEC NO: 2122

U.S. ARMY CORPS OF ENGINEERS
SACRAMENTO DISTRICT

MEAD & HUNT, INC.
180 PROMENADE CIRCLE, SUITE 240
SACRAMENTO, CA 95834

AMERICAN RIVER COMMON FEATURES
NATOMAS BASIN REACH B
RIVERSIDE CANAL PHASE 2 RELOCATION PROJECT

RIVERSIDE BASELINE PLAN AND PROFILE STA 282+00 TO 292+00

SHEET ID

C-316

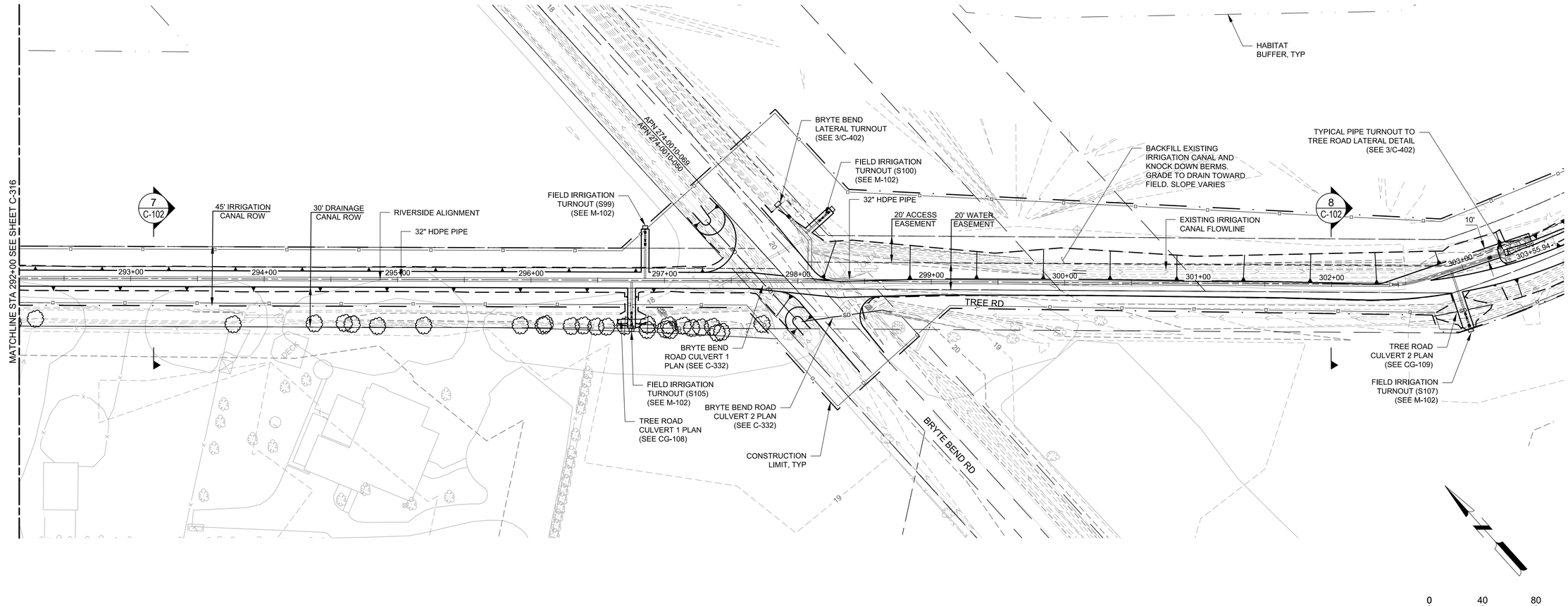

US Army Corps of Engineers®

MARK	DESCRIPTION	DATE

DESIGNED BY: C. STEPPER
DRAWN BY: E. DIOCSON
CHECKED BY: S. SULLIVAN
SUBMITTED BY: J. KASHIWADA
SIZE: ANSI D
ISSUE DATE: 05/06/2019
SOLICITATION NO.:
CONTRACT NO.:
FILE NO.: 1-04-0642
FILE NAME: 1-04-0642CU703.dwg
SPEC NO.: 2122

U.S. ARMY CORPS OF ENGINEERS
SACRAMENTO DISTRICT

MEAD & HUNT, INC.
180 PROMENADE CIRCLE, SUITE 240
SACRAMENTO, CA 95834

AMERICAN RIVER COMMON FEATURES
NATOMAS BASIN REACH B
RIVERSIDE CANAL PHASE 2 RELOCATION PROJECT

RIVERSIDE BASELINE PLAN AND PROFILE
STA 292+00 TO 303+19.56

SHEET ID
C-317

X:\1941500\161390.01\TECH\CAD\Riverside Canal\1-04-0642CU703.dwg

FINAL ISSUE FOR BID

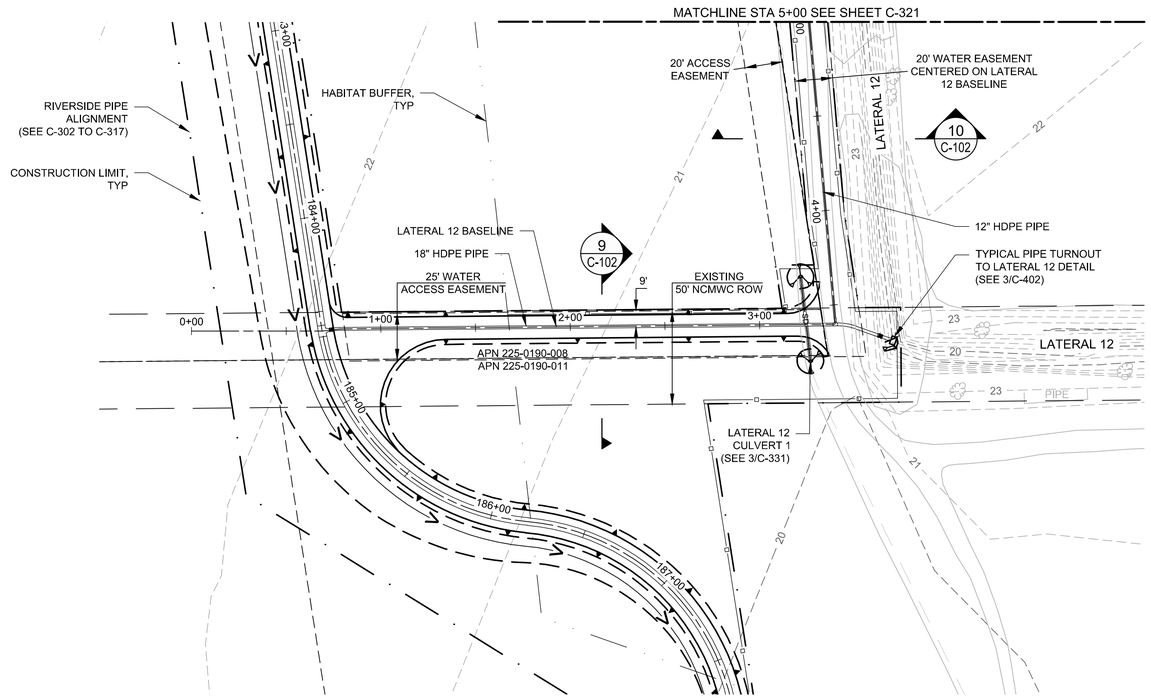

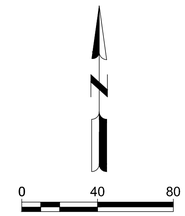

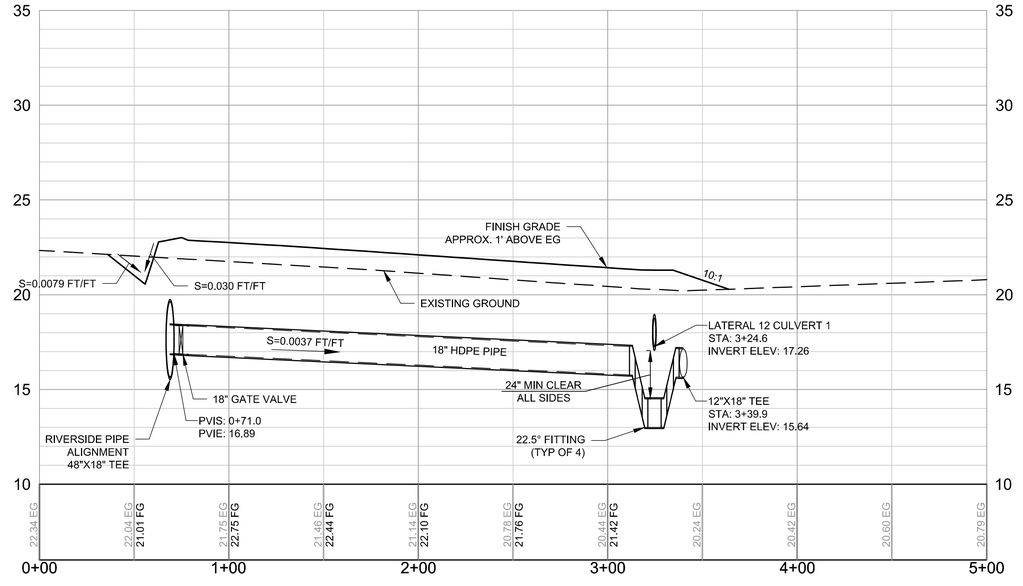

US Army Corps of Engineers®

MARK	DESCRIPTION	DATE

DESIGNED BY: C. STEPPER
DRAWN BY: E. DIOCSON
CHECKED BY: S. SULLIVAN
SUBMITTED BY: J. KASHIWADA
SIZE: ANSI D
ISSUE DATE: 05/06/2019
SOLICITATION NO.:
CONTRACT NO.:
FILE NO: 1-04-0642
SPEC NO: 2122
FILE NAME: LATERAL 12.dwg

U.S. ARMY CORPS OF ENGINEERS
SACRAMENTO DISTRICT

MEAD & HUNT, INC.
180 PROMENADE CIRCLE, SUITE 240
SACRAMENTO, CA 95834

AMERICAN RIVER COMMON FEATURES
NATOMAS BASIN REACH B
RIVERSIDE CANAL PHASE 2 RELOCATION PROJECT

LATERAL 12 BASELINE PLAN AND PROFILE STA 0+00 TO 5+00

SHEET ID

C-320

X:\19941500\161390.01\TECH\CAD\Riverside Canal\LATERAL 12.dwg

FINAL ISSUE FOR BID

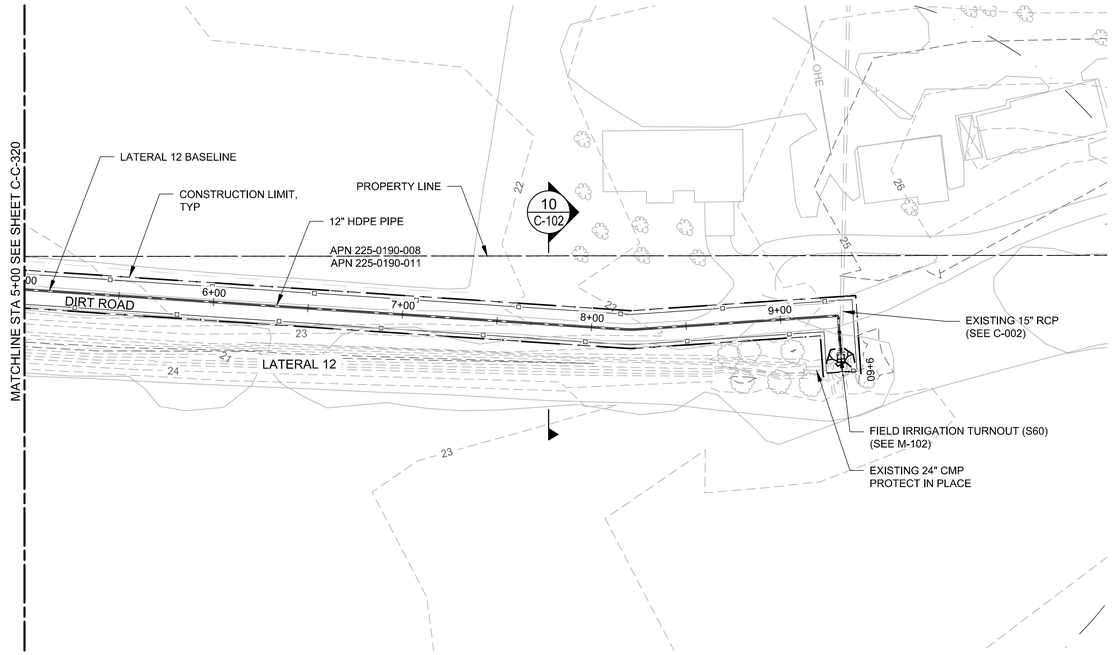

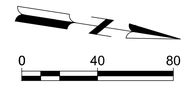

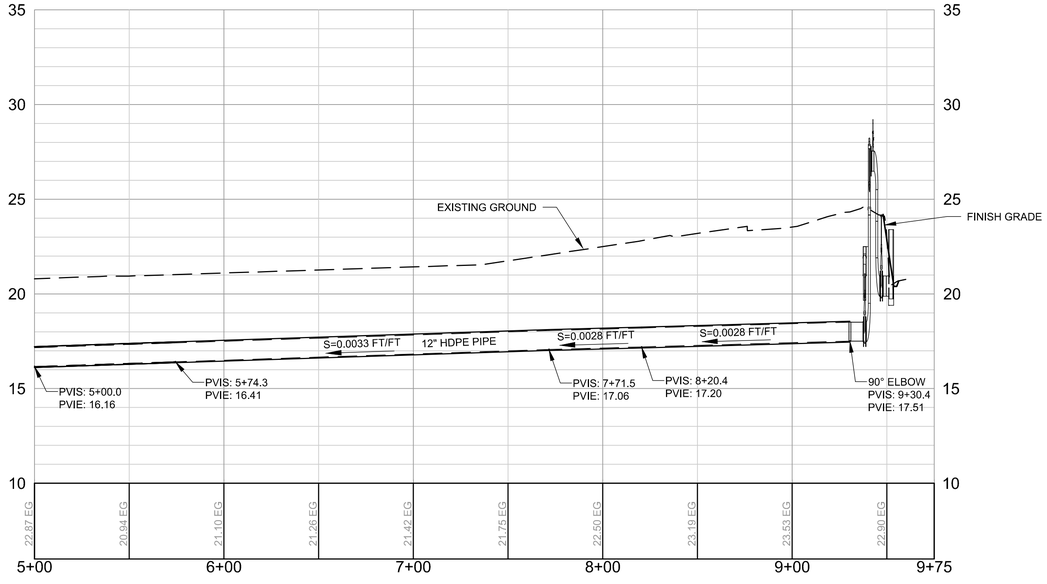

US Army Corps of Engineers®

MARK	DESCRIPTION	DATE

DESIGNED BY: C. STEPPER
DRAWN BY: E. DIOCSON
CHECKED BY: S. SULLIVAN
SUBMITTED BY: J. KASHIWADA
SIZE: ANSI D
ISSUE DATE: 05/06/2019
SOLICITATION NO.:
CONTRACT NO.:
FILE NO: 1-04-0642
SPEC NO: 2122
FILE NAME: LATERAL 12.dwg

U.S. ARMY CORPS OF ENGINEERS
SACRAMENTO DISTRICT

MEAD & HUNT, INC.
180 PROMENADE CIRCLE, SUITE 240
SACRAMENTO, CA 95834

AMERICAN RIVER COMMON FEATURES
NATOMAS BASIN REACH B
RIVERSIDE CANAL PHASE 2 RELOCATION PROJECT

LATERAL 12 BASELINE PLAN AND PROFILE STA 5+00 TO 10+00

SHEET ID

C-321

X:\19941500\161390.01\TECH\CAD\Riverside Canal\LATERAL 12.dwg

FINAL ISSUE FOR BID

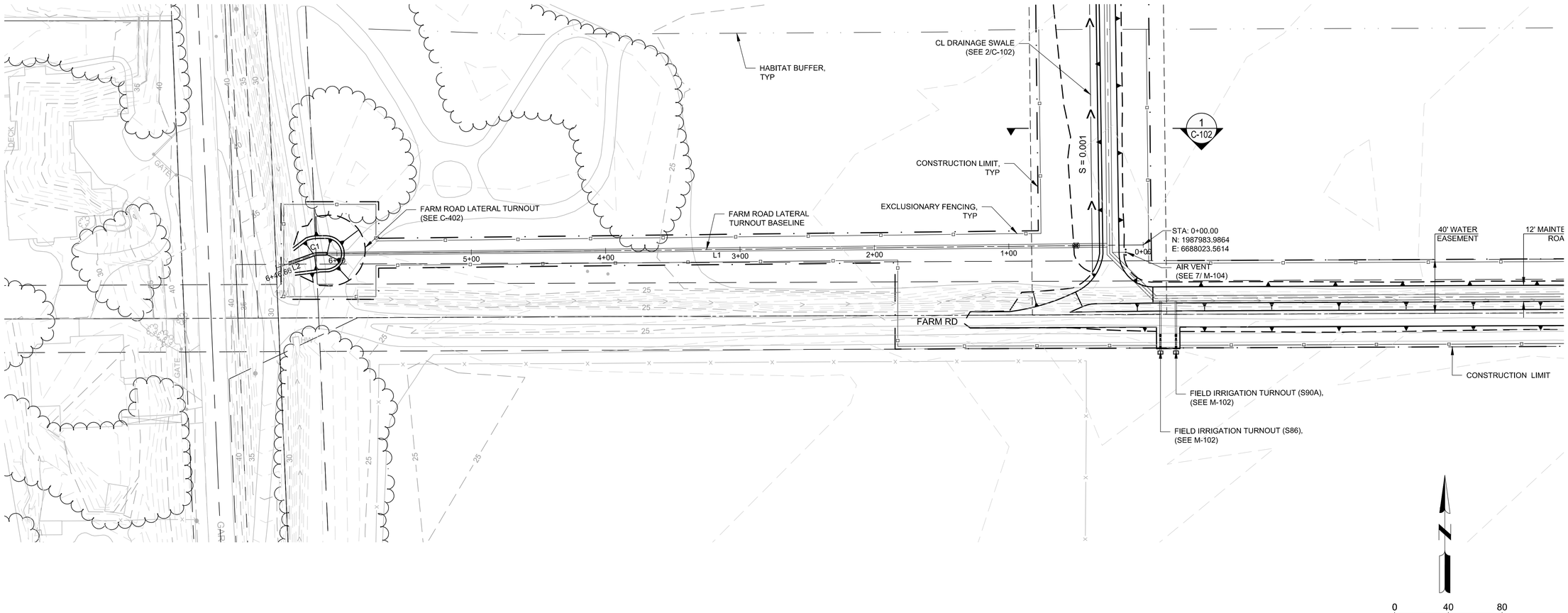

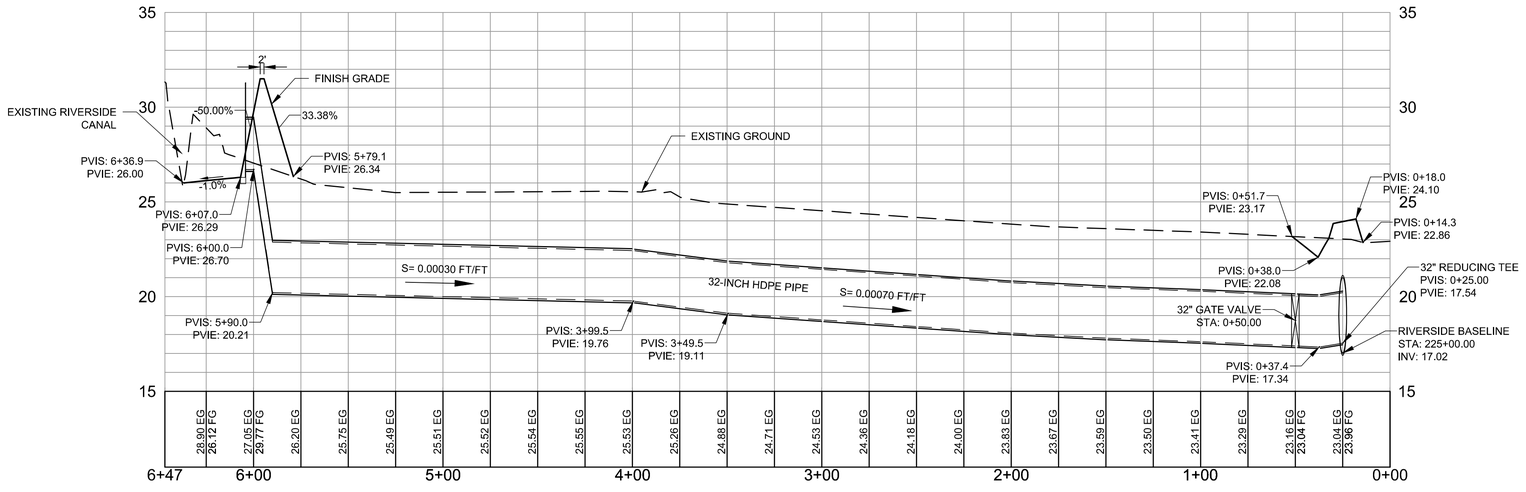

ALIGNMENT LINE DATA		
LINE #	LENGTH	BEARING
L1	613.28	S89° 22' 34.10"W
L2	28.58	S70° 17' 01.00"W

ALIGNMENT CURVE DATA										
#	RADIUS	△	TANGENT	LENGTH	CENTER POINT NORTHING	CENTER POINT EASTING	PC NORTHING	PC EASTING	PT NORTHING	PT EASTING	#
C1	15.00'	19° 05' 33"	2.52	5.00'	1987962.310	6687410.477	1987977.309	6687410.314	1987976.430	6687405.417	

US Army Corps of Engineers®

MARK	DESCRIPTION	DATE

DESIGNED BY: C. STEPPER
DRAWN BY: E. DIOCSON
CHECKED BY: S. SULLIVAN
SUBMITTED BY: J. KASHIWADA
SIZE: ANSI D
ISSUE DATE: 05/06/2019
SOLICITATION NO.:
CONTRACT NO.:
FILE NO: 1-04-0642
SPEC NO: 2122
FILE NAME: FARM ROAD LATERAL TURNOUT.dwg

U.S. ARMY CORPS OF ENGINEERS
SACRAMENTO DISTRICT

MEAD & HUNT, INC.
180 PROMENADE CIRCLE, SUITE 240
SACRAMENTO, CA 95834

AMERICAN RIVER COMMON FEATURES
NATOMAS BASIN REACH B
RIVERSIDE CANAL PHASE 2 RELOCATION PROJECT

FARM ROAD LATERAL TURNOUT PLAN AND PROFILE STA 0+00 TO 6+46.86

SHEET ID
C-322

X:\19941500\161390.01\TECH\CAD\Riverside Canal\FARM ROAD LATERAL TURNOUT.dwg

FINAL ISSUE FOR BID

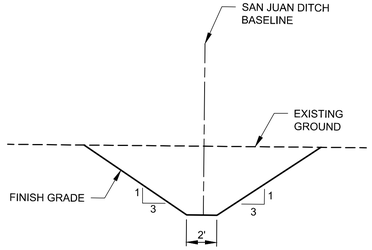

TYPICAL CROSS SECTION SAN JUAN DITCH STA 0+70 TO 5+40

7 — 1" = 5'

0 2.5 5 10

ALIGNMENT CURVE DATA											
#	RADIUS	△	TANGENT	LENGTH	CENTER POINT NORTHING	CENTER POINT EASTING	PC NORTHING	PC EASTING	PT NORTHING	PT EASTING	#
C1	101.00'	31° 40' 13"	28.65	55.83'	1990594.902	6688295.657	1990494.072	6688301.521	1990512.167	6688353.587	
C2	99.00'	34° 22' 33"	30.62	59.40'	1990431.318	6688410.723	1990512.414	6688353.940	1990530.312	6688409.646	

STORM DRAIN ALIGNMENT LINE DATA								
LINE #	LENGTH	BEARING	START POINT NORTHING	START POINT EASTING	END POINT NORTHING	END POINT EASTING	STATION START	STATION END
L1	75.00'	S8° 31' 07.79"E	1993251.34	6687302.81	1993177.16	6687313.92	0+00.00	0+75.00
L2	250.00'	S1° 05' 51.77"E	1990683.42	6687954.48	1990433.47	6687959.26	0+00.00	2+50.00
L3	81.67'	N89° 25' 39.42"E	1990476.51	6687931.95	1990477.33	6688013.62	0+00.00	0+81.67
L4	288.39'	N86° 40' 15.93"E	1990477.33	6688013.62	1990494.07	6688301.52	0+81.67	3+70.06
L5	0.43'	N55° 00' 02.53"E	1990512.17	6688353.59	1990512.41	6688353.94	4+25.89	4+26.32
L6	114.29'	N89° 22' 35.18"E	1990530.31	6688409.65	1990531.56	6688523.93	4+85.71	6+00.00

NOTE:

1. COORDINATE CULVERT INSTALLATION WITH VOLUME 5 SAN JUAN ROAD RAMP OR PROVIDE 2' TEMPORARY COVER AND PAVEMENT IN ACCORDANCE WITH SACRAMENTO COUNTY STANDARD PLANS.

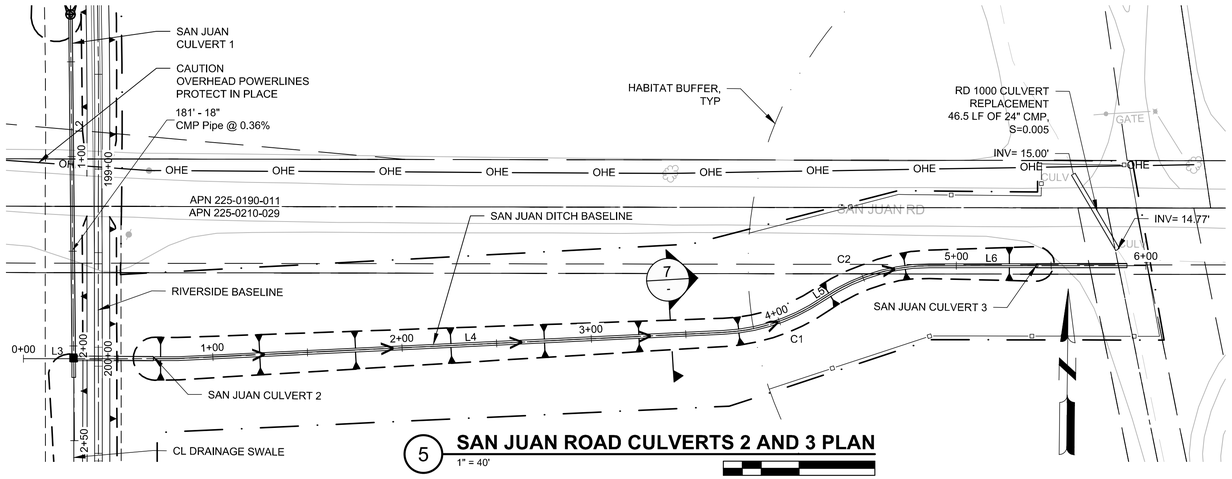

5 SAN JUAN ROAD CULVERTS 2 AND 3 PLAN

1" = 40'

0 20 40 80

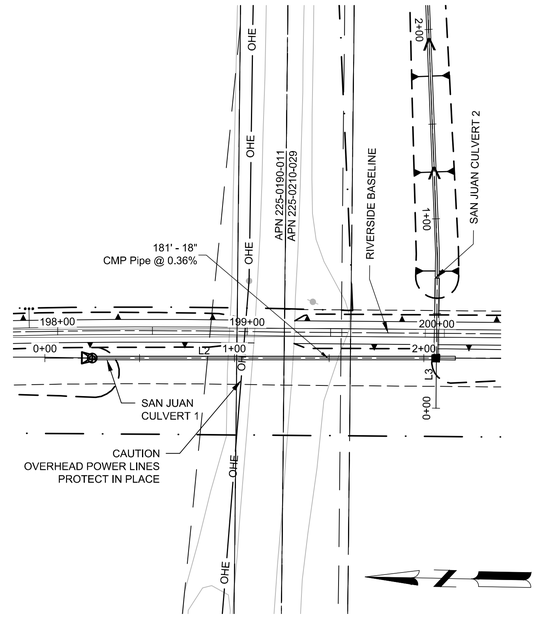

3 SAN JUAN ROAD CULVERT 1 PLAN

1" = 40'

0 20 40 80

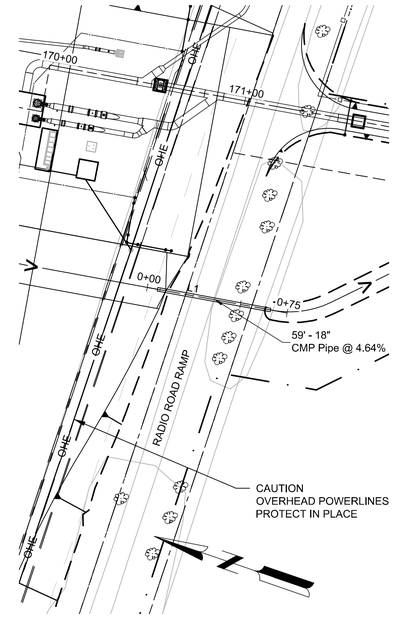

1 RADIO ROAD CULVERT PLAN

1" = 40'

0 20 40 80

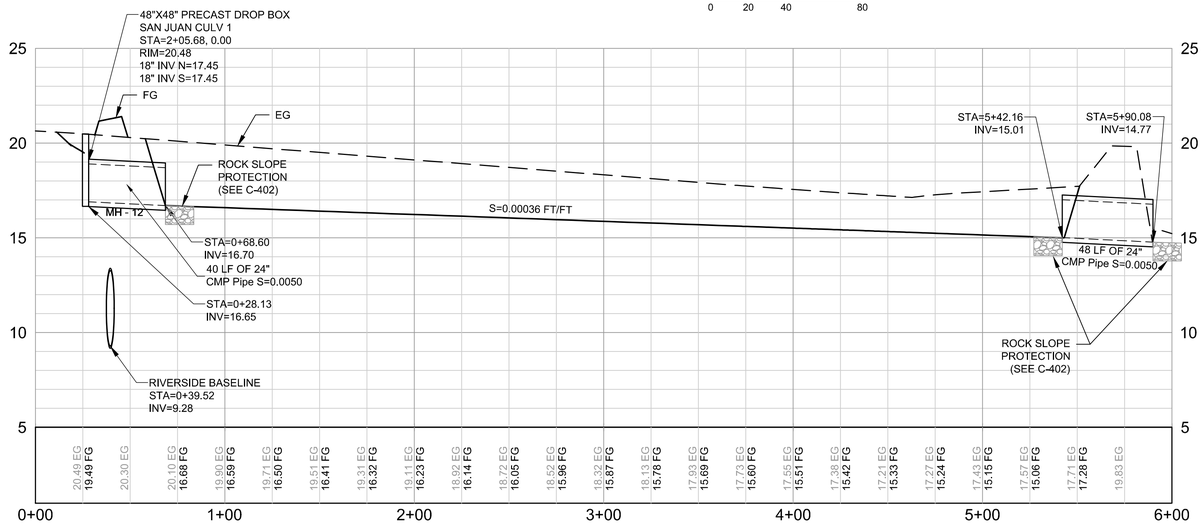

6 SAN JUAN ROAD CULVERTS 2 AND 3 PROFILE

1" = 40'

0 20 40 80

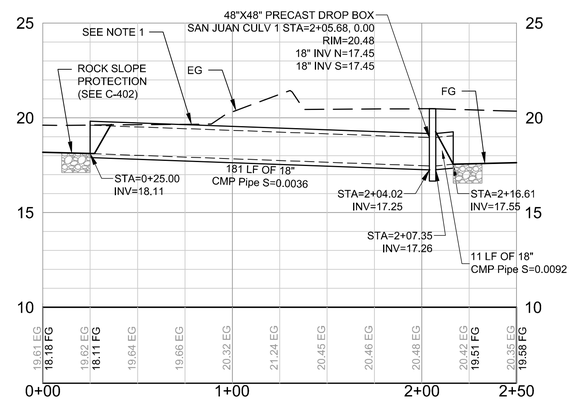

4 SAN JUAN ROAD CULVERT 1 PROFILE

1" = 40'

0 20 40 80

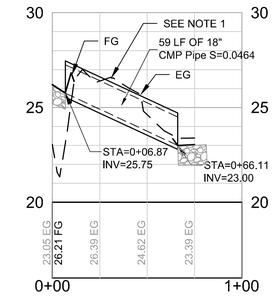

2 RADIO ROAD CULVERT PROFILE

1" = 40'

0 20 40 80

US Army Corps of Engineers®

DATE	DESCRIPTION	BY/MARK

DESIGNED BY:
+/- DESIGNER
DRAWN BY:
+/- DRAWER
CHECKED BY:
+/- CHECKER
SUBMITTED BY:
+/- SUBMITTER
SIZE: ANSI D

ISSUE DATE: 05/06/2019
SOLICITATION NO.:
CONTRACT NO.:
FILE NO: 1-04-0642
FILE NAME: PLAN AND PROFILE STORM.dwg
SPEC NO: 2122

U.S. ARMY CORPS OF ENGINEERS
SACRAMENTO DISTRICT

MEAD & HUNT, INC.
180 PROMENADE CIRCLE, SUITE 240
SACRAMENTO, CA 95834

AMERICAN RIVER COMMON FEATURES
NATOMAS BASIN REACH B
RIVERSIDE CANAL PHASE 2 RELOCATION PROJECT

RADIO ROAD AND SAN JUAN ROAD
PIPE CROSSINGS

SHEET ID
C-330

X:\19415001\161390.01\TECH\CAD\Riverside Canal\PLAN AND PROFILE STORM.dwg

FINAL ISSUE FOR BID

STORM DRAIN ALIGNMENT LINE DATA								
LINE #	LENGTH	BEARING	START POINT NORTHING	START POINT EASTING	END POINT NORTHING	END POINT EASTING	STATION START	STATION END
L7	113.18'	S18° 31' 08.13"W	1988064.02	6688991.00	1987956.70	6688955.06	0+51.88	1+65.06
L8	91.44'	S14° 29' 46.88"W	1987956.70	6688955.06	1987868.17	6688932.17	1+65.06	2+56.50
L9	88.24'	S10° 55' 17.79"W	1987868.17	6688932.17	1987781.53	6688915.45	2+56.50	3+44.74
L10	34.41'	S4° 40' 09.28"E	1991963.29	6687871.19	1991928.99	6687873.99	0+00.00	0+34.41
L11	26.97'	S2° 08' 58.02"E	1991928.99	6687873.99	1991902.04	6687875.00	0+34.41	0+61.39
L12	22.56'	S9° 22' 30.82"E	1991902.04	6687875.00	1991879.78	6687878.68	0+61.39	0+83.95
L13	13.31'	S10° 25' 01.68"E	1991879.78	6687878.68	1991866.68	6687881.08	0+83.95	0+97.26
L14	17.42'	S22° 33' 02.39"E	1991866.68	6687881.08	1991850.59	6687887.77	0+97.26	1+14.69
L21	28.57'	S88° 49' 08.57"W	1986627.85	6688741.75	1986627.26	6688713.19	0+20.00	0+48.57
L22	8.58'	N83° 51' 03.33"W	1986627.26	6688713.19	1986628.18	6688704.66	0+48.57	0+57.15
L23	32.12'	S86° 07' 05.94"W	1986628.18	6688704.66	1986626.00	6688672.61	0+57.15	0+89.27
L24	21.99'	N83° 56' 00.72"W	1986626.00	6688672.61	1986628.33	6688650.75	0+89.27	1+11.26
L25	8.84'	N48° 52' 55.45"W	1986628.33	6688650.75	1986634.14	6688644.09	1+11.26	1+20.10

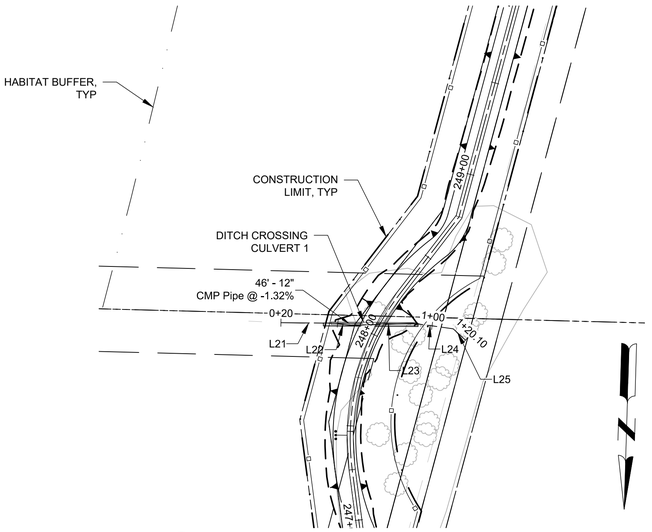

5 DITCH CROSSING CULVERT 1 PLAN
1" = 40'

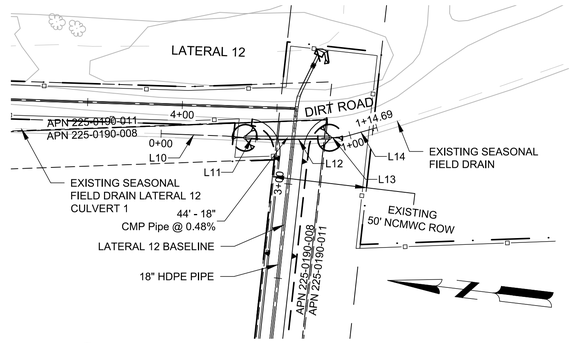

3 LATERAL 12 CULVERT 1 PLAN
1" = 40'

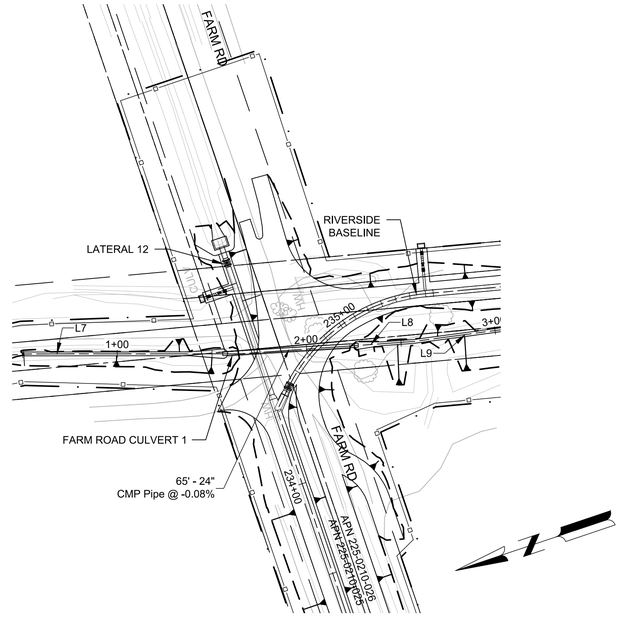

1 FARM ROAD CULVERT 1 PLAN
1" = 40'

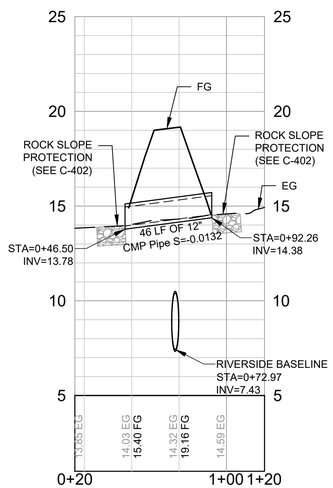

6 DITCH CROSSING CULVERT 1 PROFILE
1" = 40'

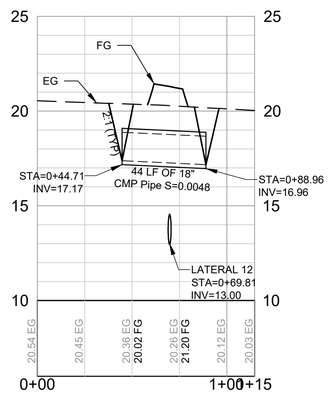

4 LATERAL 12 CULVERT 1 PROFILE
1" = 40'

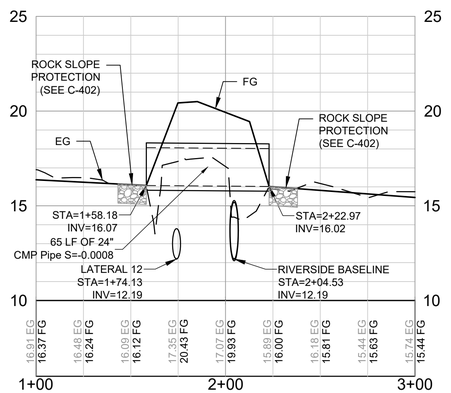

2 FARM ROAD CULVERT 1 PROFILE
1" = 40'

US Army Corps of Engineers®

DATE	DESCRIPTION	MARK

DESIGNED BY: C. STEPPER
DRAWN BY: E. DIOCSON
CHECKED BY: S. SULLIVAN
SUBMITTED BY: J. KASHIWADA
SIZE: ANSI D
ISSUE DATE: 05/06/2019
SOLICITATION NO.:
CONTRACT NO.:
FILE NO: 1-04-0642
FILE NAME: PLAN AND PROFILE STORM.dwg
SPEC NO: 2122

U.S. ARMY CORPS OF ENGINEERS
SACRAMENTO DISTRICT

MEAD & HUNT, INC.
180 PROMENADE CIRCLE, SUITE 240
SACRAMENTO, CA 95834

AMERICAN RIVER COMMON FEATURES
NATOMAS BASIN REACH B
RIVERSIDE CANAL PHASE 2 RELOCATION PROJECT

FARM ROAD AND LATERAL 12 PIPE CROSSINGS

SHEET ID
C-331

X:\19941500\161390.01\TECH\CAD\Riverside Canal\PLAN AND PROFILE STORM.dwg

FINAL ISSUE FOR BID

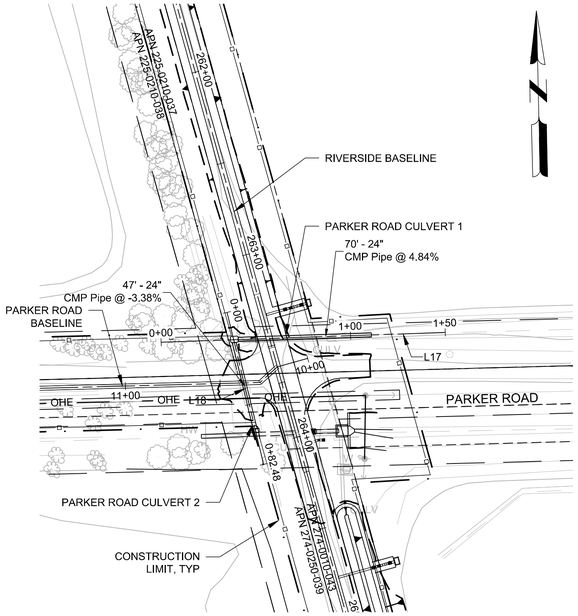

5 PARKER ROAD CULVERT 1 AND 2 PLAN

1" = 40'

0 20 40 80

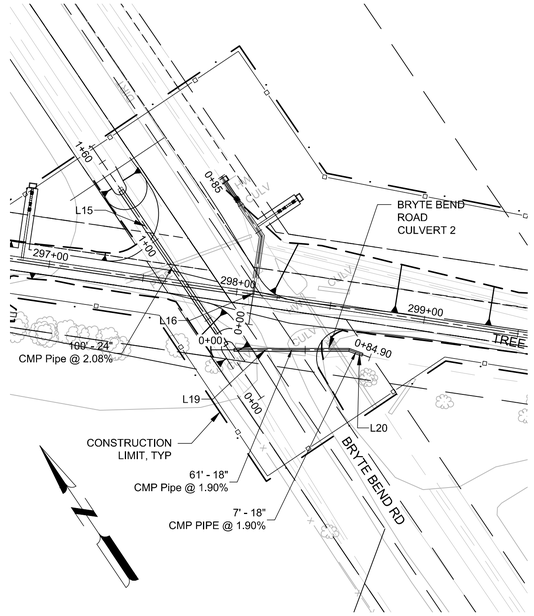

3 BRYTE BEND ROAD CULVERT 2 PLAN

1" = 40'

0 20 40 80

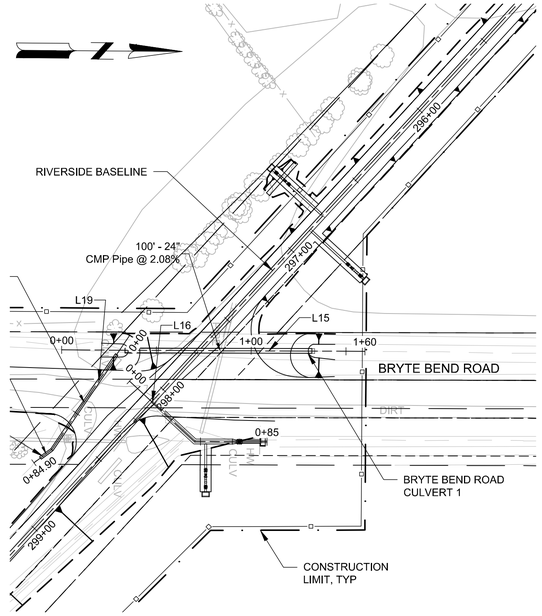

1 BRYTE BEND ROAD CULVERT 1 PLAN

1" = 40'

0 20 40 80

STORM DRAIN ALIGNMENT LINE DATA								
LINE #	LENGTH	BEARING	START POINT NORTHING	START POINT EASTING	END POINT NORTHING	END POINT EASTING	STATION START	STATION END
L15	160.00'	N0° 06' 50.31"W	1982275.24	6690621.63	1982435.24	6690621.31	0+00.00	1+60.00
L16	47.00'	N42° 21' 55.43"E	1982311.14	6690637.84	1982345.87	6690669.51	0+00.00	0+47.00
L17	150.00'	N89° 17' 35.31"E	1985142.02	6688727.70	1985143.87	6688877.68	0+00.00	1+50.00
L18	82.48'	S12° 15' 42.48"E	1985156.97	6688762.79	1985076.36	6688780.31	0+00.00	0+82.48
L19	73.20'	S56° 09' 18.30"E	1982311.20	6690613.54	1982270.43	6690674.34	0+00.00	0+73.20
L20	11.70'	S36° 24' 45.60"E	1982270.43	6690674.34	1982261.01	6690681.28	0+73.20	0+84.90

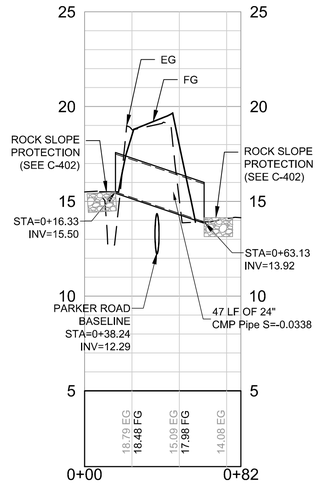

7 PARKER ROAD CULVERT 2 PROFILE

1" = 40'

0 20 40 80

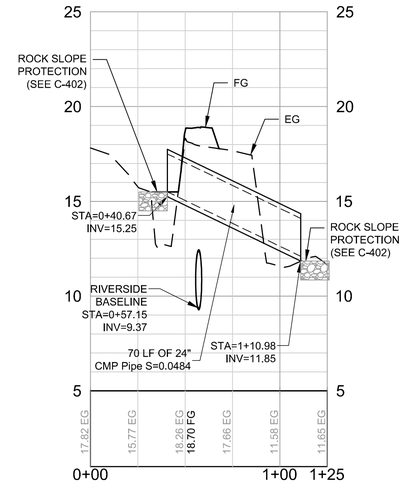

6 PARKER ROAD CULVERT 1 PROFILE

1" = 40'

0 20 40 80

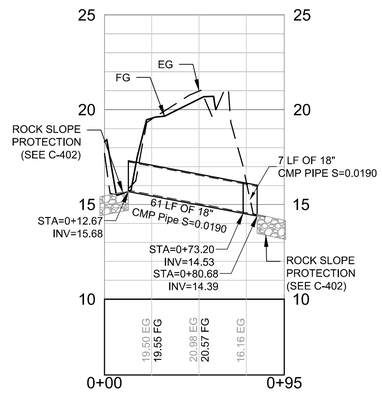

4 BRYTE BEND ROAD CULVERT 2 PROFILE

1" = 40'

0 20 40 80

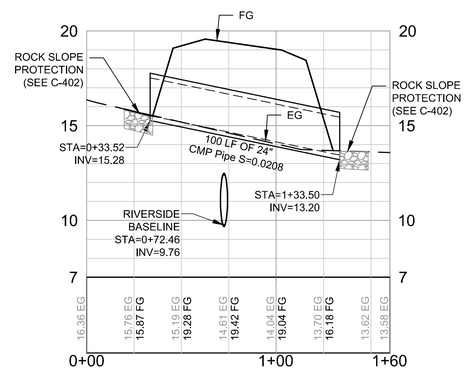

2 BRYTE BEND ROAD CULVERT 1 PROFILE

1" = 40'

0 20 40 80

US Army Corps of Engineers®

DESIGNED BY:	ISSUE DATE:
C. STEPPER	05/06/2019
DRAWN BY:	SOLICITATION NO.:
E. DIOCSON	
CHECKED BY:	CONTRACT NO.:
S. SULLIVAN	
SUBMITTED BY:	FILE NO:
J. KASHIWADA	1-04-0642
SIZE:	SPEC NO:
ANSI D	PLAN AND PROFILE STORM.dwg

MARK	DESCRIPTION	DATE

U.S. ARMY CORPS OF ENGINEERS
SACRAMENTO DISTRICT

MEAD & HUNT, INC.
180 PROMENADE CIRCLE, SUITE 240
SACRAMENTO, CA 95834

AMERICAN RIVER COMMON FEATURES
NATOMAS BASIN REACH B
RIVERSIDE CANAL PHASE 2 RELOCATION PROJECT

BRYTE BEND ROAD AND PARKER
ROAD PIPE CROSSINGS

SHEET ID

C-332

X:\1941500\161390.01\TECH\CAD\Riverside Canal\PLAN AND PROFILE STORM.dwg

FINAL ISSUE FOR BID

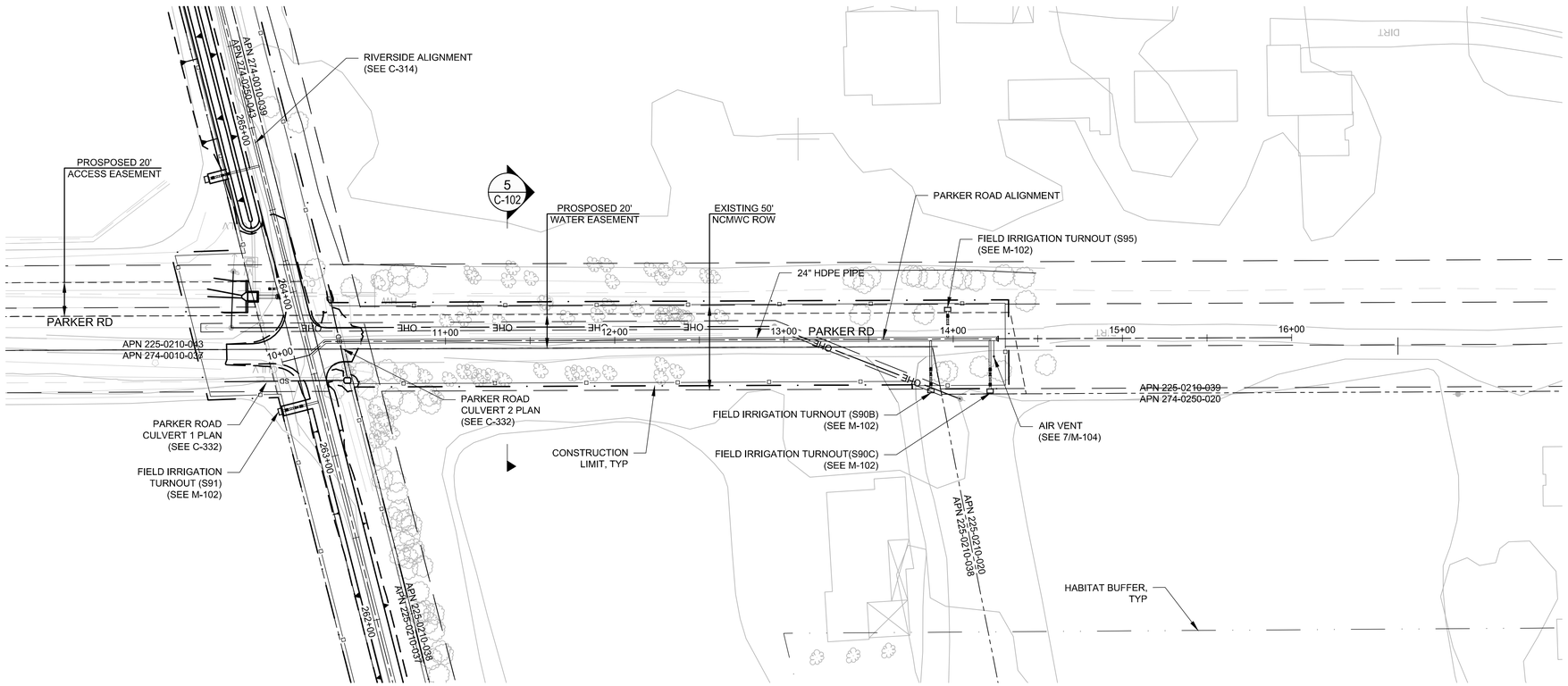

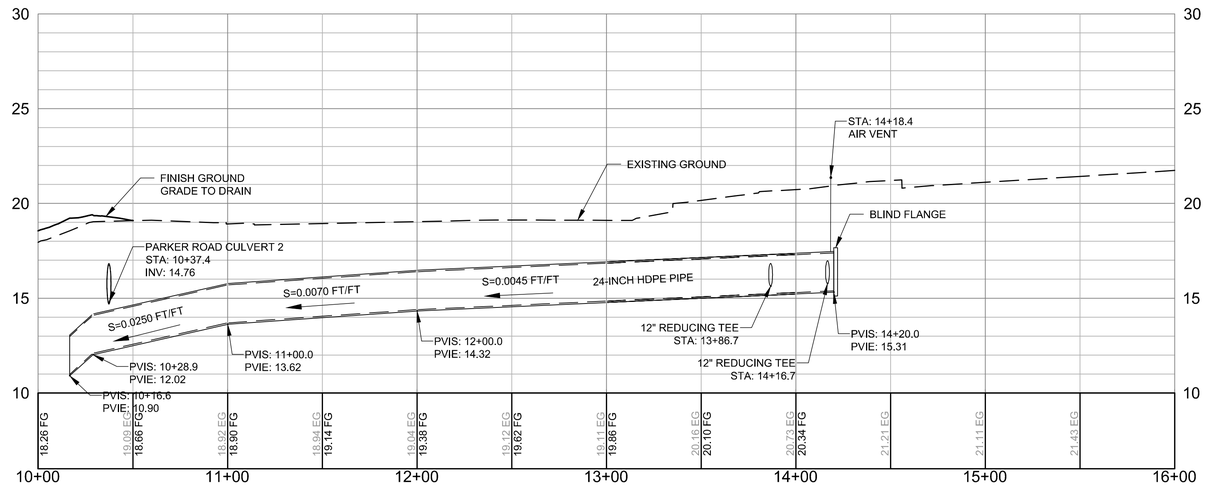

MARK	DESCRIPTION	DATE

DESIGNED BY: C. STEPPER
DRAWN BY: E. DIOCSON
CHECKED BY: S. SULLIVAN
SUBMITTED BY: J. KASHIWADA
SIZE: ANSI D
ISSUE DATE: 05/06/2019
SOLICITATION NO.:
CONTRACT NO.:
FILE NO: T-04-0642
FILE NAME: PARKER ROAD.dwg
SPEC NO: 2122

U.S. ARMY CORPS OF ENGINEERS
SACRAMENTO DISTRICT

MEAD & HUNT, INC.
180 PROMENADE CIRCLE, SUITE 240
SACRAMENTO, CA 95834

AMERICAN RIVER COMMON FEATURES
NATOMAS BASIN REACH B
RIVERSIDE CANAL PHASE 2 RELOCATION PROJECT

PARKER ROAD BASELINE PLAN AND PROFILE
10+00 TO 16+00

SHEET ID

C-333

X:\19941500\161390.01\TECH\CAD\Riverside Canal\PARKER ROAD.dwg

FINAL ISSUE FOR BID

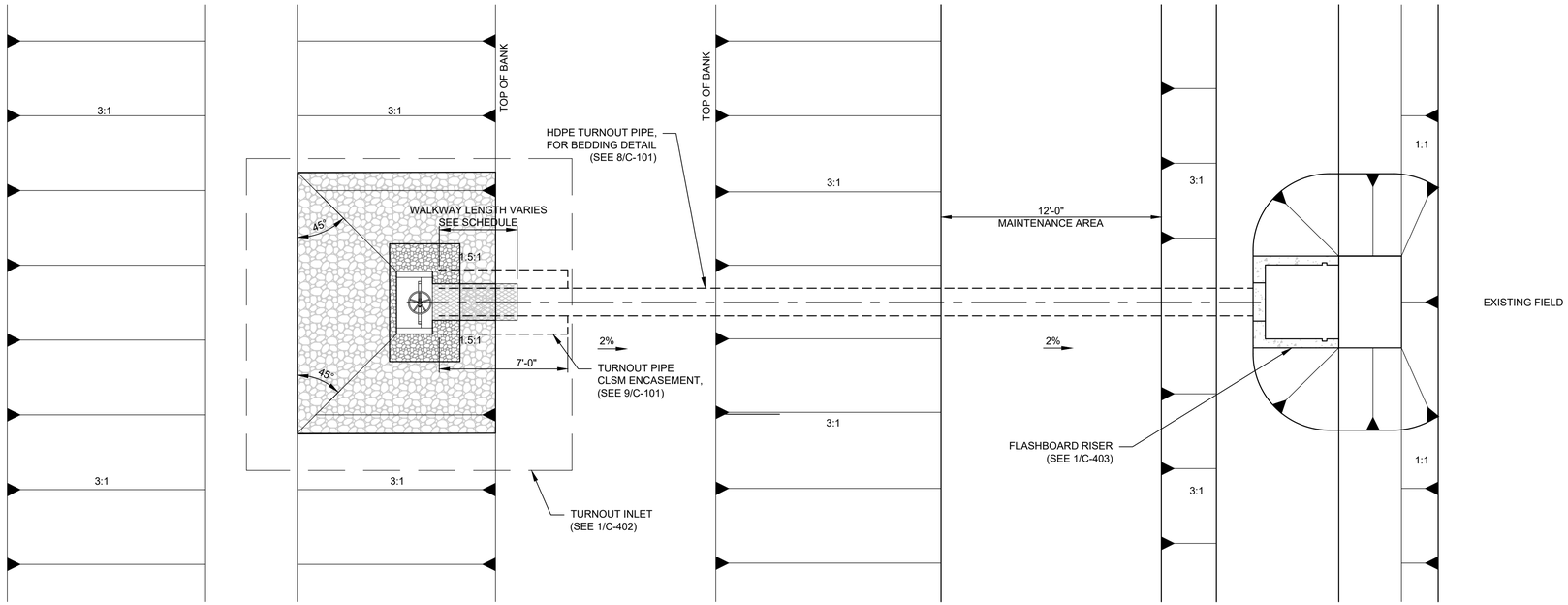

PLAN VIEW

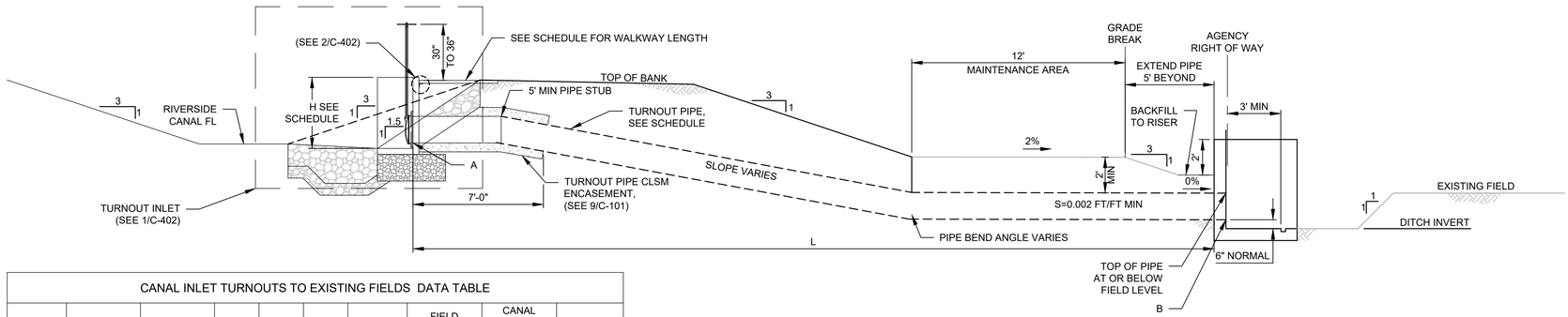

PROFILE VIEW

CANAL INLET TURNOUTS TO EXISTING FIELDS DATA TABLE									
DWG NO	INLET STATION	TURNOUT NAME	A	B	L	PIPE SIZE	FIELD FLASHBOARD RISER (FT)	CANAL FLASHBOARD RISER HEIGHT (FT)	WALKWAY LENGTH
C-302	151+90	TNBC LATERAL	26'	18.5'	75'	18"	5'	6.5'	7.5'
C-303	153+00	JOHNSON TURNOUT	23.2'	14.5'	114'	30"	5'	10'	12.5'

1 **CANAL TURNOUT**
1/4" = 1'-0"

0 2' 4' 8'

US Army Corps of Engineers®

MARK	DESCRIPTION	DATE

DESIGNED BY: C. STEPPER
DRAWN BY: E. DIOCSON
CHECKED BY: S. SULLIVAN
SUBMITTED BY: J. KASHIWADA
SIZE: ANSI D
ISSUE DATE: 05/06/2019
SOLICITATION NO.:
CONTRACT NO.:
FILE NO: 1-04-0842
SPEC NO: 2122
FILE NAME: CG-501.dwg

U.S. ARMY CORPS OF ENGINEERS
SACRAMENTO DISTRICT

MEAD & HUNT, INC.
180 PROMENADE CIRCLE, SUITE 240
SACRAMENTO, CA 95834

AMERICAN RIVER COMMON FEATURES
NATOMAS BASIN REACH B
RIVERSIDE CANAL PHASE 2 RELOCATION PROJECT

CANAL TURNOUT PLAN AND PROFILE

SHEET ID
C-401

X:\19415001\161390.01\TECH\CAD\Riverside Canal\CG-501.dwg

FINAL ISSUE FOR BID

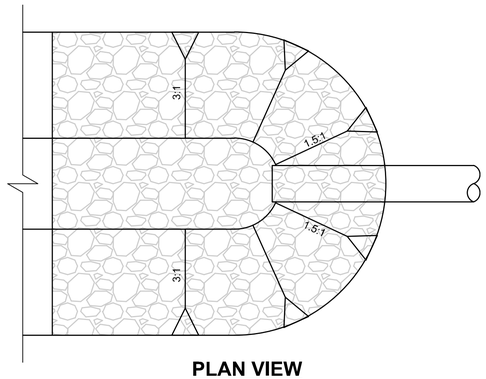

PLAN VIEW

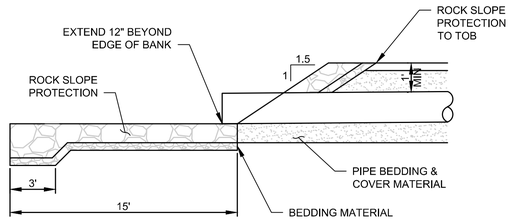

PROFILE VIEW

4 TYPICAL CULVERT INLET DETAIL

1"=5'

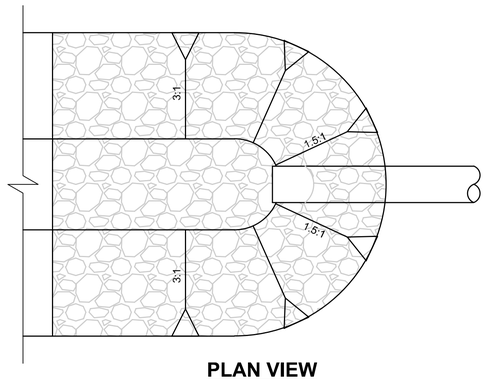

PLAN VIEW

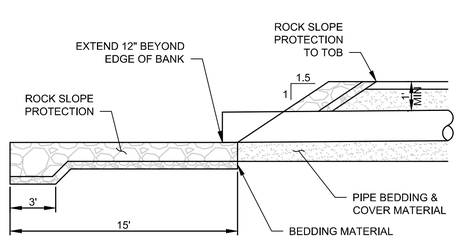

PROFILE VIEW

5 TYPICAL CULVERT OUTLET DETAIL

SCALE: 1"=5'

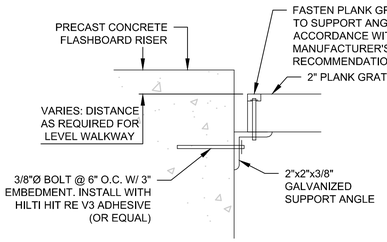

2 WALKWAY SUPPORT DETAIL

3" = 1'-0"

0 3" 6" 9"

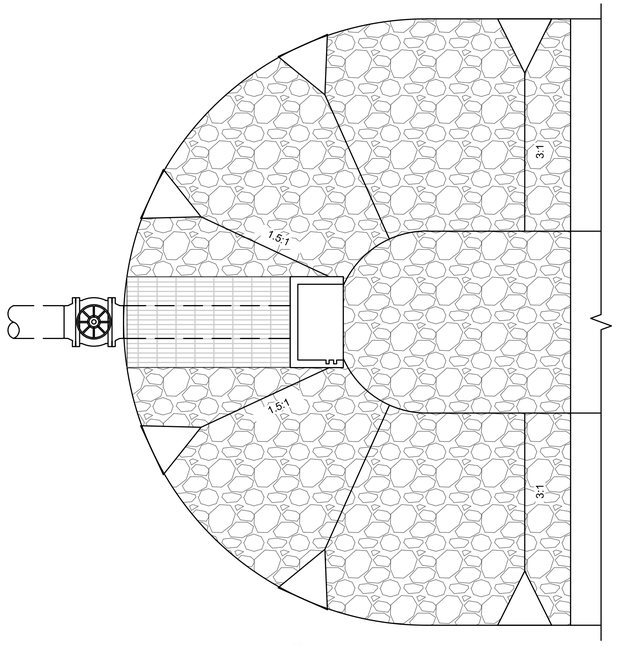

PLAN VIEW

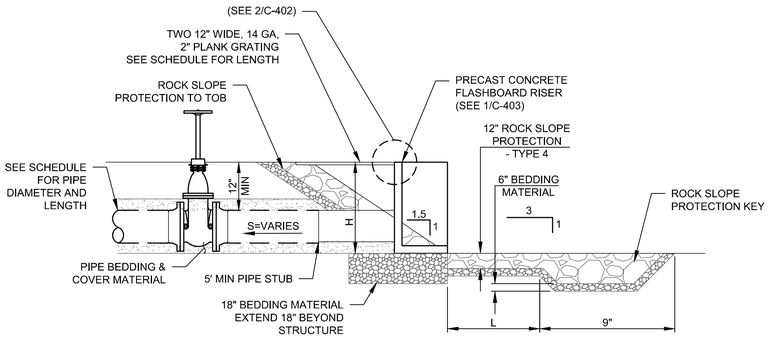

PROFILE VIEW

3 PIPELINE TURNOUT OUTLET TO LATERAL

1" = 5'

0 2.5 5 10

FLASHBOARD RISER LATERAL TURNOUT OUTLET SCHEDULE							
DWG NO	INLET STATION	LATERAL NAME	PIPE LENGTH (FT)	PIPE DIAMETER (IN)	PIPE MATERIAL	FLASHBOARD RISER HEIGHT (FT)	WALKWAY L (FT)
C-304	170+22	RADIO RD	93.75'	24"	HDPE	5'	7.5'
C-311	234+41	LATERAL 13	96.00'	32"	HDPE	4'	6'
C-314	263+85	PARKER RD	23.00'	24"	HDPE	N/A	N/A
C-317	298+09	BRYTE BEND RD	60.50'	18"	HDPE	5'	7.5'
C-317	303+36	TREE RD	0.00'	18"	HDPE	5'	4.5'
C-320	184+60	LATERAL 12	34.00'	18"	HDPE	4'	6'
C-322	225+00	FARM RD LATERAL	582.00'	32"	HDPE	5'	7.5'

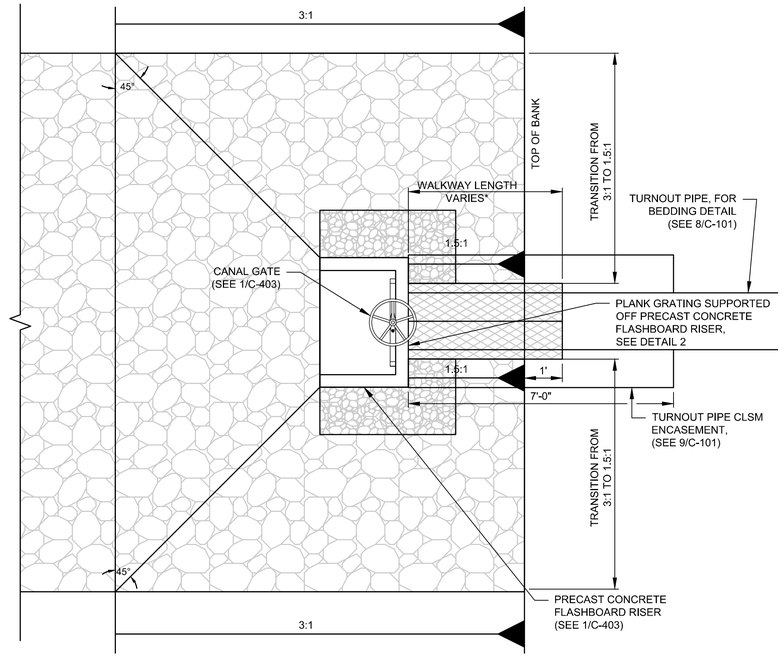

PLAN VIEW

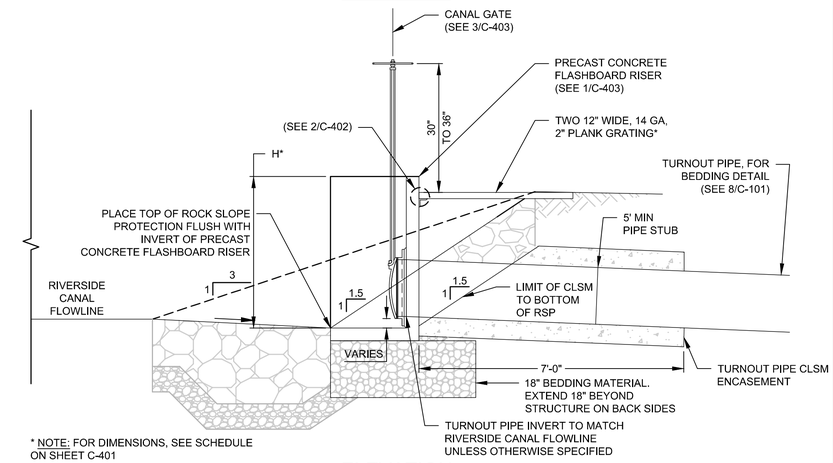

* NOTE: FOR DIMENSIONS, SEE SCHEDULE ON SHEET C-401

ELEVATION

1 CANAL TURNOUT INLET DETAIL

1" = 2'

0 1 2 4

US Army Corps of Engineers®

MARK	DESCRIPTION	DATE

DESIGNED BY: C. STEPPER
DRAWN BY: E. DIOCSON
CHECKED BY: S. SULLIVAN
SUBMITTED BY: J. KASHIWADA
SIZE: ANSI D
ISSUE DATE: 05/06/2019
SOLICITATION NO.:
CONTRACT NO.:
FILE NO: 1-04-0642
SPEC NO: 2122
FILE NAME: CG501.dwg

U.S. ARMY CORPS OF ENGINEERS
SACRAMENTO DISTRICT

MEAD & HUNT, INC.
180 PROMENADE CIRCLE, SUITE 240
SACRAMENTO, CA 95834

AMERICAN RIVER COMMON FEATURES
NATOMAS BASIN REACH B
RIVERSIDE CANAL PHASE 2 RELOCATION PROJECT

TURNOUTS TO LATERAL AND TYPICAL CULVERT DETAIL

SHEET ID
C-402

X:\19941500\161390.01\TECH\CAD\Riverside Canal\CG-501.dwg

FINAL ISSUE FOR BID

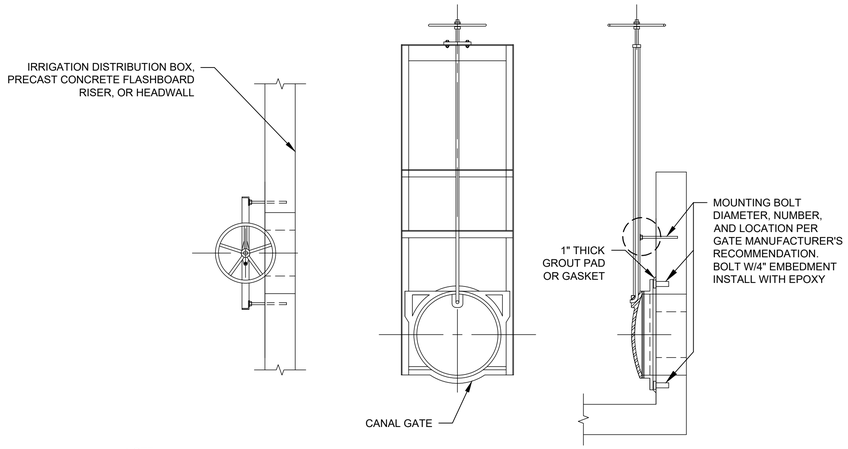

NOTE:

1. CONTRACTOR TO PROVIDE GATE WITH SUFFICIENT MOUNTING PLATE SIZE TO ALLOW ADEQUATE CLEARANCE TO INSTALL ANCHOR BOLTS. PROVIDE SEATING SURFACE BASED UPON THE OUTSIDE DIAMETER AT THE CAST IN PIPE STUB.

3 CANAL GATE DETAIL

1" = 1'-0"

0 1/2' 1' 2'

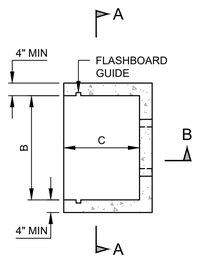

PLAN VIEW

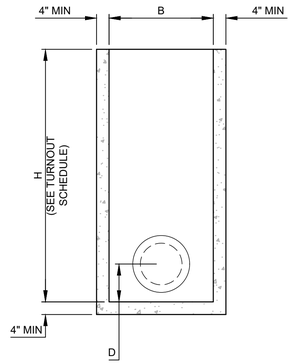

SECTION A-A

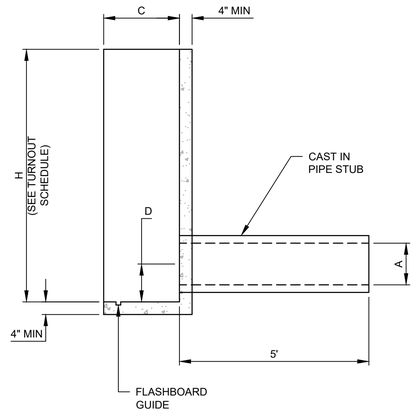

SECTION B-B

PRECAST CONCRETE FLASHBOARD RISER DIMENSIONS				
PIPE Ø (A)	B	C	D	NOMINAL SIZE
18"	3'	2'	13.5"	3' W x H
24"	3'	2'	17"	3' W x H
30"	4'	30"	20"	4' W x H
32"	4'	30"	21"	4' W x H
36"	4'	30"	24"	4' W x H
42"	5'	3'	27"	5' W x H

1 PRECAST CONCRETE FLASHBOARD RISER DETAIL

1" = 2'

0 1 2 4

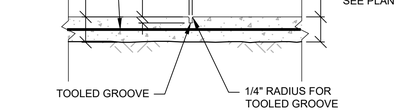

4 CONCRETE LINING TYPICAL CONTROL JOINT

1/2" = 1'-0"

0 1' 2' 4'

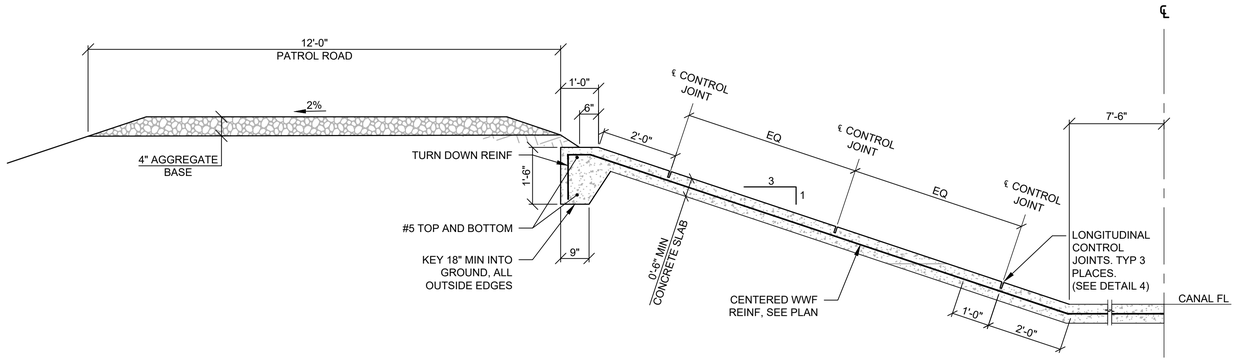

NOTE:
INSTALL CONTRACTION JOINTS AT TEN FOOT (10'-0") MAXIMUM INTERVALS EACH DIRECTION.

5 CONCRETE LINING TYPICAL SECTION

1/2" = 1'-0"

0 1' 2' 4'

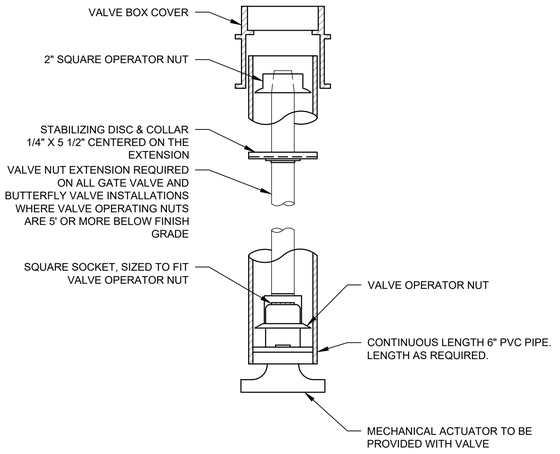

NOTES:

1. OPERATOR NUT, VALVE NUT EXTENSION, DISC & COLLAR & SQUARE SOCKET SHALL ALL BE CENTERED VERTICALLY OVER VALVE OPERATOR NUT.
2. VALVE NUT EXTENSIONS SHALL BE OF CONTINUOUS LENGTH UNLESS APPROVED BY THE CONTRACTING OFFICER.

2 VALVE CONNECTION PLAN

1/2" = 1'-0"

0 1' 2' 4'

US Army Corps of Engineers®

MARK	DESCRIPTION	DATE

ISSUE DATE: 05/06/2019
SOLICITATION NO.:
CONTRACT NO.:
FILE NO: 1-04-0842
FILE NAME: 05403dwg

DESIGNED BY: D. STEPPER
DRAWN BY: E. DIOCSON
CHECKED BY: S. SULLIVAN
SUBMITTED BY: J. KASHIWADA
SIZE: ANSI D
SPEC NO: 2122

U.S. ARMY CORPS OF ENGINEERS
SACRAMENTO DISTRICT

MEAD & HUNT, INC.
180 PROMENADE CIRCLE, SUITE 240
SACRAMENTO, CA 95834

AMERICAN RIVER COMMON FEATURES
NATOMAS BASIN REACH B
RIVERSIDE CANAL PHASE 2 RELOCATION PROJECT

IRRIGATION IMPROVEMENTS AND WATER SUPPLY

SHEET ID
C-403

X:\19941500\161390.01\TECH\CAD\Riverside Canal\CG-503.dwg

FINAL ISSUE FOR BID

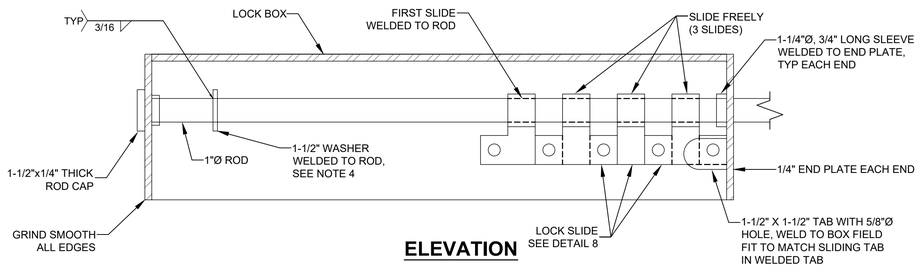

ELEVATION

GENERAL NOTES:

1. LOCK BOX SHALL BE 6" x 6" x 1/4" STEEL TUBING WITH BOTTOM CUT OUT AND ENDS CAPPED WITH 1/4" THICK PLATE.
2. OPENINGS IN PLATE CAPS REINFORCED WITH WELDING SLEEVE.
3. ROD SHALL SLIDE FREELY THROUGH SLIDING SLEEVES.
4. WELD WASHER TO ROD TO ALLOW ROD TO PASS THROUGH THE ROD PLATE 2" WHEN CLOSED AND ALLOW THE ROD TO BE PULLED BACK SUFFICIENTLY TO OPEN THE GATE BUT NOT AS FAR AS TO PULL ROD ALL THE WAY INTO LOCK BOX.
5. FIELD FIT LOCK MECHANISM LOCATION BASED ON FIRST LOCK TAB AND LOCK UNIT IN 'CLOSED' POSITION.

7 4-LOCK MULTI-LOCK ASSEMBLY DETAIL
NTS

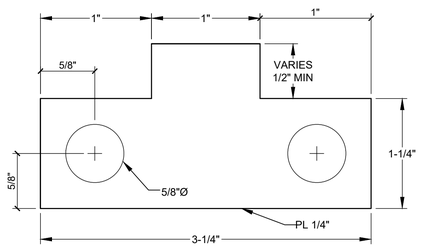

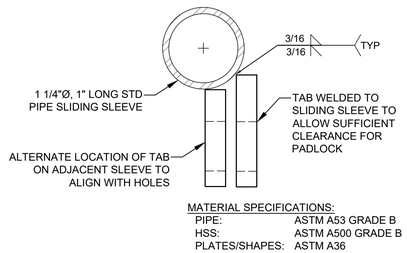

MATERIAL SPECIFICATIONS:

PIPE:	ASTM A53 GRADE B
HSS:	ASTM A500 GRADE B
PLATES/SHAPES:	ASTM A36
ROD:	ASTM A36
GALVANIZED:	ASTM A153
CONCRETE:	Fc = 4000 PSI
BOLTS:	SAE429

8 LOCK TAB AND SLIDING SLEEVE DETAIL
NTS

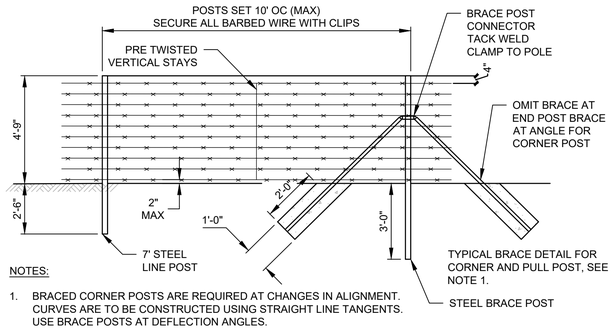

NOTES:

1. BRACED CORNER POSTS ARE REQUIRED AT CHANGES IN ALIGNMENT. CURVES ARE TO BE CONSTRUCTED USING STRAIGHT LINE TANGENTS. USE BRACE POSTS AT DEFLECTION ANGLES.
2. OFFSET HINGE SO GATE WILL SWING 180° TO OPEN FLAT AGAINST FENCE LINE.

9 BARBED WIRE FENCE
NOT TO SCALE

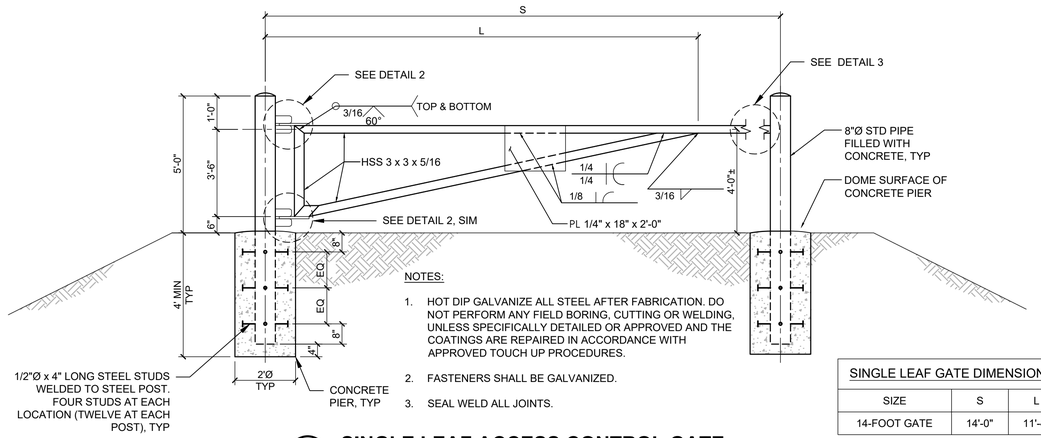

NOTES:

1. HOT DIP GALVANIZE ALL STEEL AFTER FABRICATION. DO NOT PERFORM ANY FIELD BORING, CUTTING OR WELDING, UNLESS SPECIFICALLY DETAILED OR APPROVED AND THE COATINGS ARE REPAIRED IN ACCORDANCE WITH APPROVED TOUCH UP PROCEDURES.
2. FASTENERS SHALL BE GALVANIZED.
3. SEAL WELD ALL JOINTS.

SINGLE LEAF GATE DIMENSIONS		
SIZE	S	L
14-FOOT GATE	14'-0"	11'-4"

1 SINGLE LEAF ACCESS CONTROL GATE
NTS

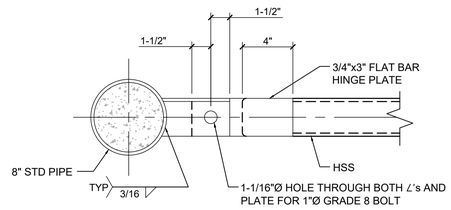

PLAN

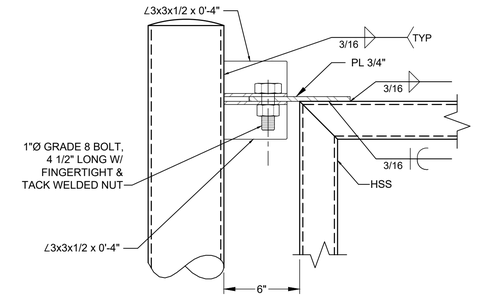

ELEVATION

2 GATE HINGE ASSEMBLY DETAIL
NTS

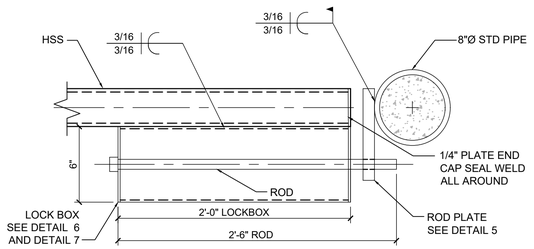

PLAN

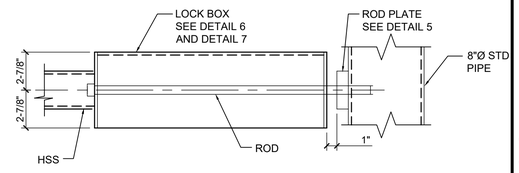

ELEVATION

NOTE:

1. INSTALL LOCK ASSEMBLIES IN ACCORDANCE WITH DETAIL 6 AND FIELD MOUNT ROD PLATE AFTER GATE IS INSTALLED.

3 MULTI-LOCK ASSEMBLY DETAIL FOR SINGLE LEAF GATE
NTS

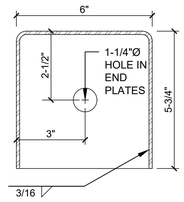

SECTION

6 MULTI-LOCK LOCK BOX DETAIL
NTS

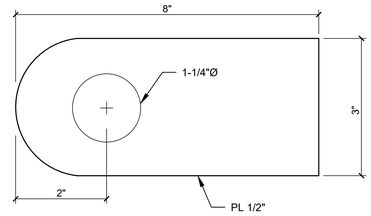

5 ROD PLATE DETAIL
NTS

4 NOT USED
NTS

US Army Corps of Engineers®

MARK	DESCRIPTION	DATE

DESIGNED BY: C. STEPPER
DRAWN BY: E. DIOCSON
CHECKED BY: S. SULLIVAN
SUBMITTED BY: J. KASHIWADA
SIZE: ANSI D
ISSUE DATE: 05/09/2019
SOLICITATION NO.:
CONTRACT NO.:
FILE NO: 1-04-0842
SPEC NO: 2122
FILE NAME: CG-503.dwg

U.S. ARMY CORPS OF ENGINEERS
SACRAMENTO DISTRICT

MEAD & HUNT, INC.
180 PROMENADE CIRCLE, SUITE 240
SACRAMENTO, CA 95834

AMERICAN RIVER COMMON FEATURES
NATOMAS BASIN REACH B
RIVERSIDE CANAL PHASE 2 RELOCATION PROJECT

COMMON CIVIL DETAILS

SHEET ID
C-404

X:\19941500\161390.01\TECH\CAD\Riverside Canal\CG-503.dwg

FINAL ISSUE FOR BID

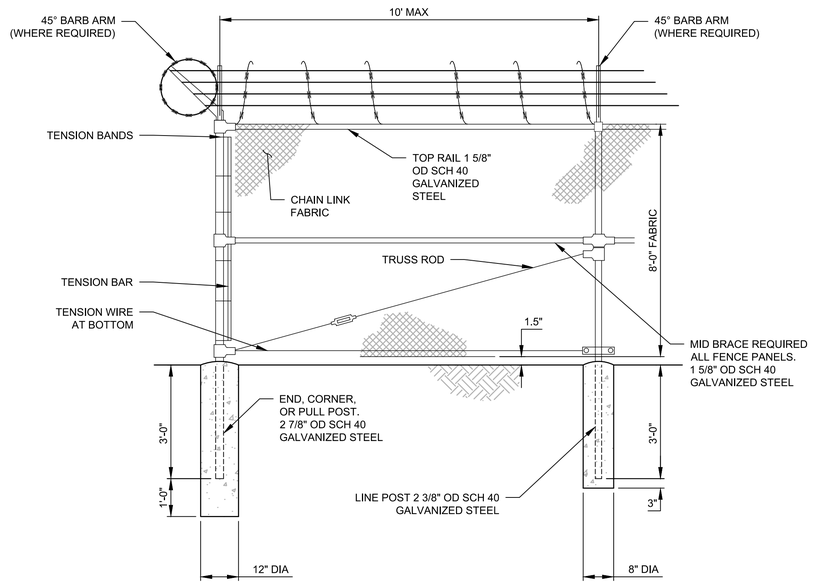

NOTES:
1. PROVIDE PULL POST AT NOT MORE THAN 500 FOOT INTERVALS AND AT ALIGNMENT CHANGES.
2. COMPLY WITH STATE STANDARD SPECIFICATIONS SECTION FOR DETAILS NOT SHOWN.
3. SEE SPECIFICATION SECTION 32 31 13 FOR ADDITIONAL DETAIL.

4 8' CHAIN LINK FENCE ELEVATION
NTS

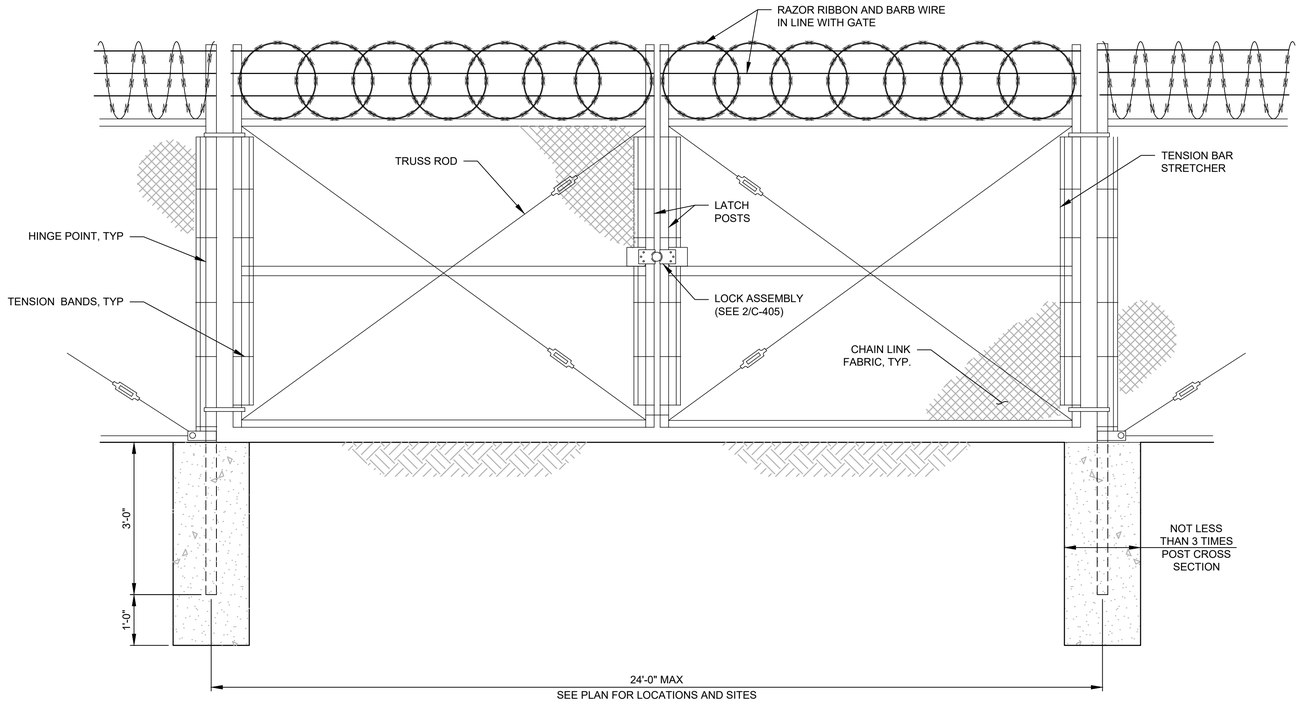

1 DOUBLE LEAF SWING GATE DETAIL
NTS

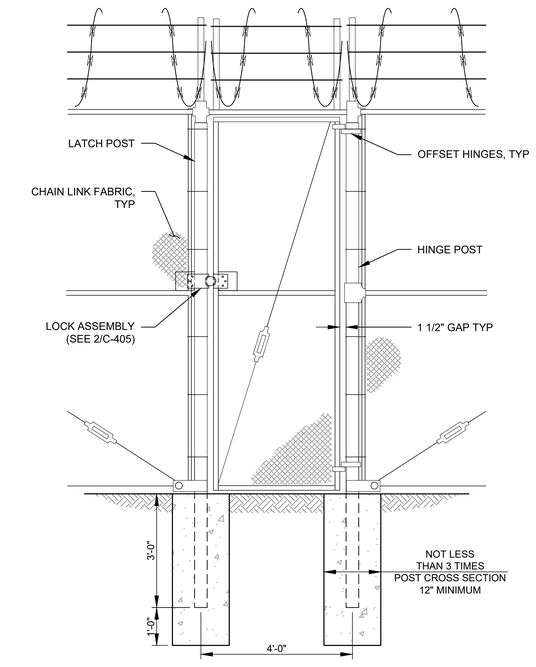

5 4' PEDESTRIAN GATE
NTS

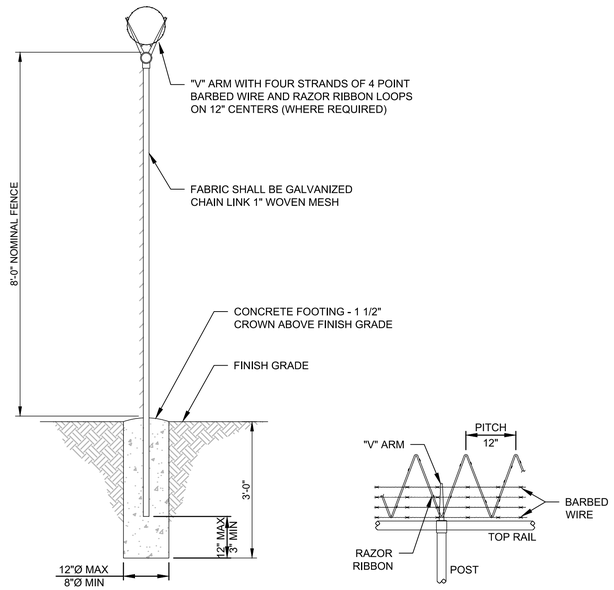

TYPICAL SECTION **TOPPING FRONT VIEW**

3 8' CHAIN LINK FENCE DETAILS
NTS

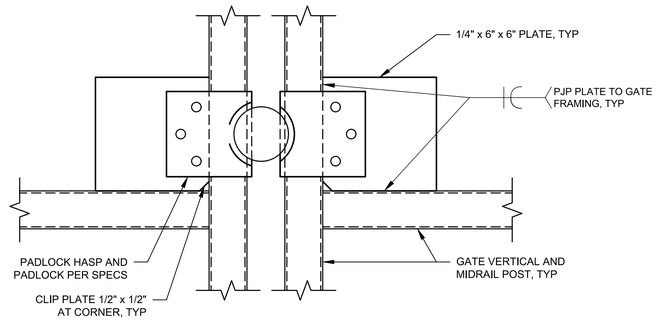

2 SINGLE SIDE ACCESS LOCK ASSEMBLY DETAIL
NTS

US Army Corps of Engineers®

MARK	DESCRIPTION	DATE

ISSUE DATE: 06/06/2019
SOLICITATION NO.:
CONTRACT NO.:
FILE NO: 1-04-0642
FILE NAME: 1-04-0642CG-505.dwg

DESIGNED BY: C. STEPPER
DRAWN BY: E. DIOCSON
CHECKED BY: S. SULLIVAN
SUBMITTED BY: J. KASHIWADA
SIZE: ANSI D
SPEC NO:
FILE NO: 2722

U.S. ARMY CORPS OF ENGINEERS
SACRAMENTO DISTRICT

MEAD & HUNT, INC.
180 PROMENADE CIRCLE, SUITE 240
SACRAMENTO, CA 95834

AMERICAN RIVER COMMON FEATURES
NATOMAS BASIN REACH B
RIVERSIDE CANAL PHASE 2 RELOCATION PROJECT

TYPICAL FENCE DETAILS

SHEET ID
C-405

X:\19415001\161390.01\TECH\CAD\Riverside Canal\1-04-0642CG-505.dwg

FINAL ISSUE FOR BID

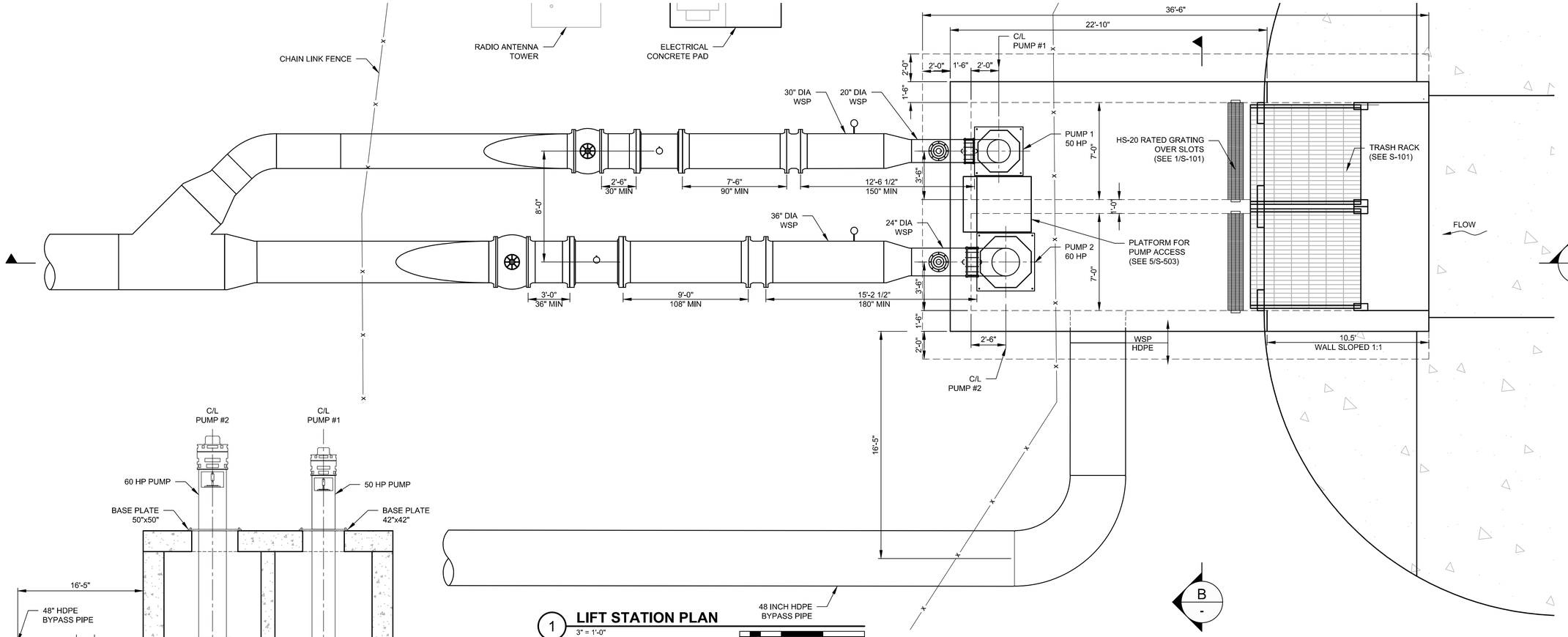

NOTES:

1. SEE S-101 FOR REINFORCEMENT

1 LIFT STATION PLAN

3" = 1'-0"

0 3' 6' 9'

B LIFT STATION SECTION

3" = 1'-0"

0 3' 6' 9'

A LIFT STATION SECTION

3" = 1'-0"

0 3' 6' 9'

NOTES:

1. EQUIPMENT SHALL BE INSTALLED PER THE MANUFACTURER'S RECOMMENDATIONS AND MEET ALL UPSTREAM AND DOWNSTREAM REQUIREMENTS FOR INSTALLATION.
2. HDPE PIPE SHALL BE FUSION WELDED IN ACCORDANCE WITH ASTM D 2657.
3. STEEL PIPE JOINTS SHALL BE COMPLETE JOINT PENETRATION BUTT WELDS. THE INTERIOR WELD SURFACE SHALL BE GROUND SMOOTH.

US Army Corps of Engineers®

MARK	DESCRIPTION	DATE

ISSUE DATE: 05/06/2019
SOLICITATION NO.:
CONTRACT NO.:
FILE NO: 1-04-0642
FILE NAME: C-501 PLAN & PROFILE.dwg
SPEC NO: 2222
SIZE: ANSI D

DESIGNED BY: C. STEPPER
DRAWN BY: E. DIOCSON
CHECKED BY: S. SULLIVAN
SUBMITTED BY: J. KASHIWADA

U.S. ARMY CORPS OF ENGINEERS
SACRAMENTO DISTRICT

MEAD & HUNT, INC.
180 PROMENADE CIRCLE, SUITE 240
SACRAMENTO, CA 95834

AMERICAN RIVER COMMON FEATURES
NATOMAS BASIN REACH B
RIVERSIDE CANAL PHASE 2 RELOCATION PROJECT

GENERAL ARRANGEMENT
LIFT STATION PLAN, SECTION AND DETAIL

SHEET ID

C-501

X:\19415001\161390.01\TECH\CAD\Riverside Canal\C-501 PLAN & PROFILE.dwg

FINAL ISSUE FOR BID

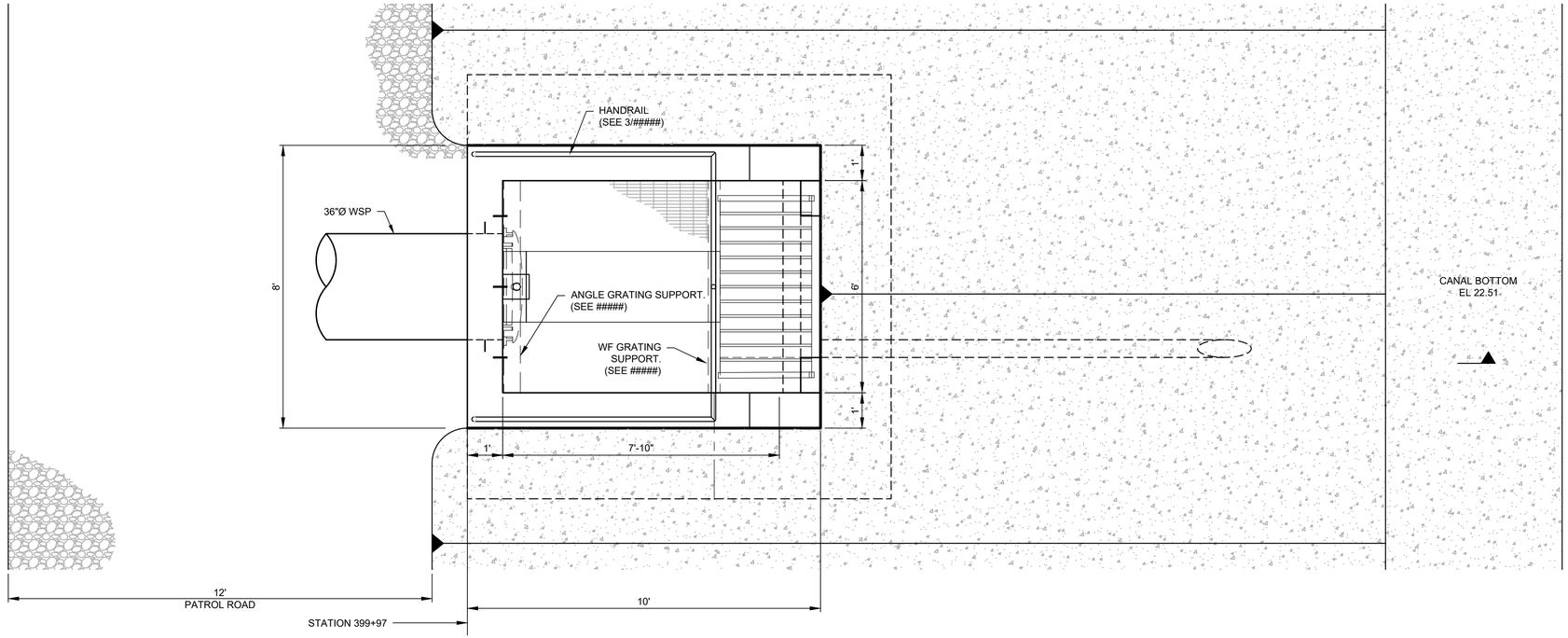

1 RIVERSIDE OUTFALL PIPE DISCHARGE STRUCTURE PLAN

1" = 2'

0 1 2 4

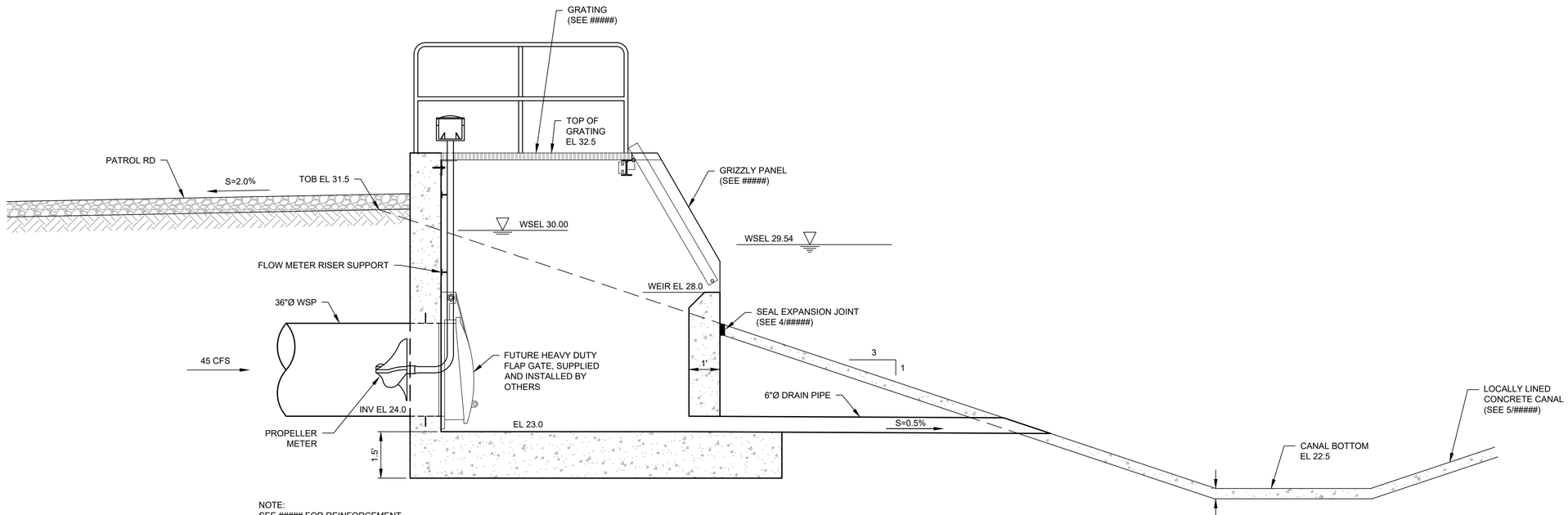

NOTE:
SEE ##### FOR REINFORCEMENT

A RIVERSIDE OUTFALL PIPE DISCHARGE STRUCTURE SECTION

1" = 2'

0 1 2 4

US Army Corps of Engineers®

MARK	DESCRIPTION	DATE

DESIGNED BY: +J DESIGNER
DRAWN BY: +J DRAWER
CHECKED BY: +J CHECKER
SUBMITTED BY: +J SUBMITTER
SIZE: ANSI D

ISSUE DATE: 05/06/2019
SOLICITATION NO.:
CONTRACT NO.:
FILE NO: T-04-0642
FILE NAME: C-501 PLAN & PROFILE.dwg
SPEC NO: 2122

U.S. ARMY CORPS OF ENGINEERS
SACRAMENTO DISTRICT

MEAD & HUNT, INC.
180 PROMENADE CIRCLE, SUITE 240
SACRAMENTO, CA 95834

AMERICAN RIVER COMMON FEATURES
NATOMAS BASIN REACH B
RIVERSIDE CANAL PHASE 2 RELOCATION PROJECT

RIVERSIDE OUTFALL PIPE DISCHARGE STRUCTURE

SHEET ID
C-502

X:\19415001\161390.01\TECH\CAD\Riverside Canal\C-501 PLAN & PROFILE.dwg

FINAL ISSUE FOR BID

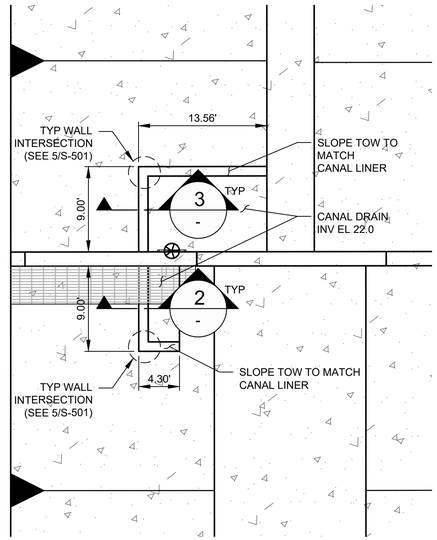

C RETAINING WALLS DETAIL

1/8" = 1'-0"

0 4' 8' 16'

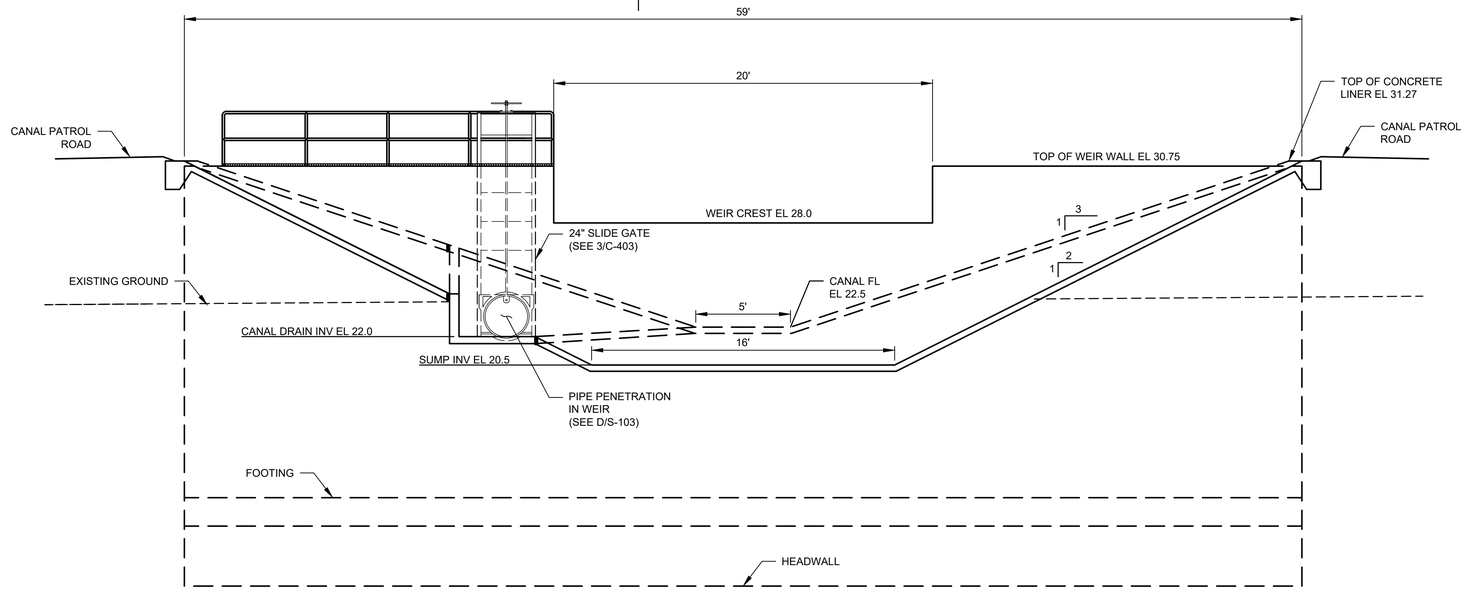

1 CONCRETE RECTANGULAR WEIR ELEVATION (DOWNSTREAM VIEW)

3" = 1'-0"

0 3' 6' 9'

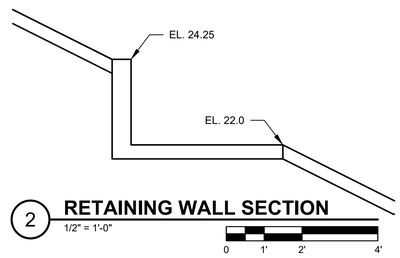

2 RETAINING WALL SECTION

1/2" = 1'-0"

0 1' 2' 4'

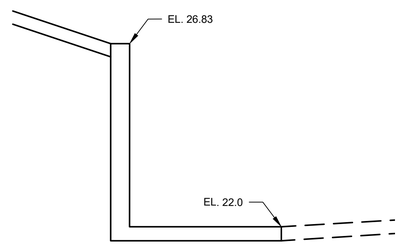

3 RETAINING WALL SECTION

1/2" = 1'-0"

0 1' 2' 4'

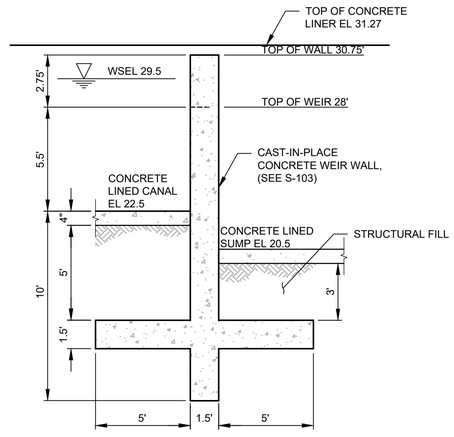

NOTE:
SEE STRUCTURAL FOR REINFORCEMENT

A CONCRETE RECTANGULAR WEIR SECTION

3" = 1'-0"

0 3' 6' 9'

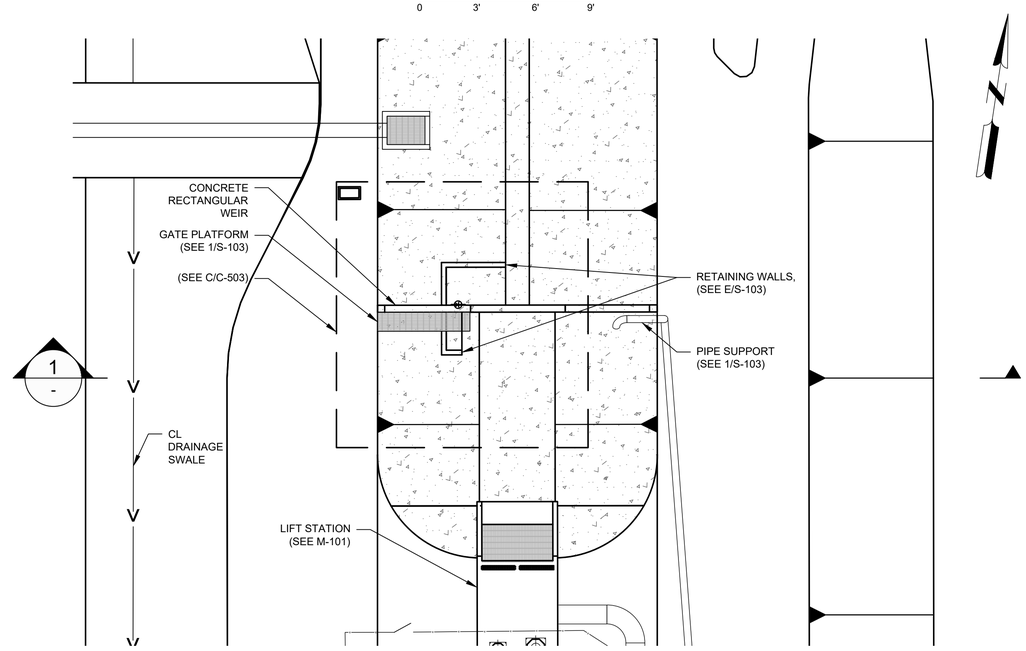

B CONCRETE RECTANGULAR WEIR PLAN

3/4" = 1'-0"

0 1' 2' 3'

US Army Corps of Engineers®

MARK	DESCRIPTION	DATE

DESIGNED BY: C. STEPPER
DRAWN BY: E. DIOCSON
CHECKED BY: S. SULLIVAN
SUBMITTED BY: J. KASHIWADA
SIZE: ANSI D
SPEC NO: 2122
FILE NO: 1-04-0842
FILE NAME: C-501 PLAN & PROFILE.dwg
ISSUE DATE: 05/06/2019
SOLICITATION NO.:
CONTRACT NO.:

U.S. ARMY CORPS OF ENGINEERS
SACRAMENTO DISTRICT

MEAD & HUNT, INC.
180 PROMENADE CIRCLE, SUITE 240
SACRAMENTO, CA 95834

AMERICAN RIVER COMMON FEATURES
NATOMAS BASIN REACH B
RIVERSIDE CANAL PHASE 2 RELOCATION PROJECT

CONCRETE RECTANGULAR WEIR

SHEET ID

C-503

X:\1941500\161390.01\TECH\CAD\Riverside Canal\C-501 PLAN & PROFILE.dwg

FINAL ISSUE FOR BID

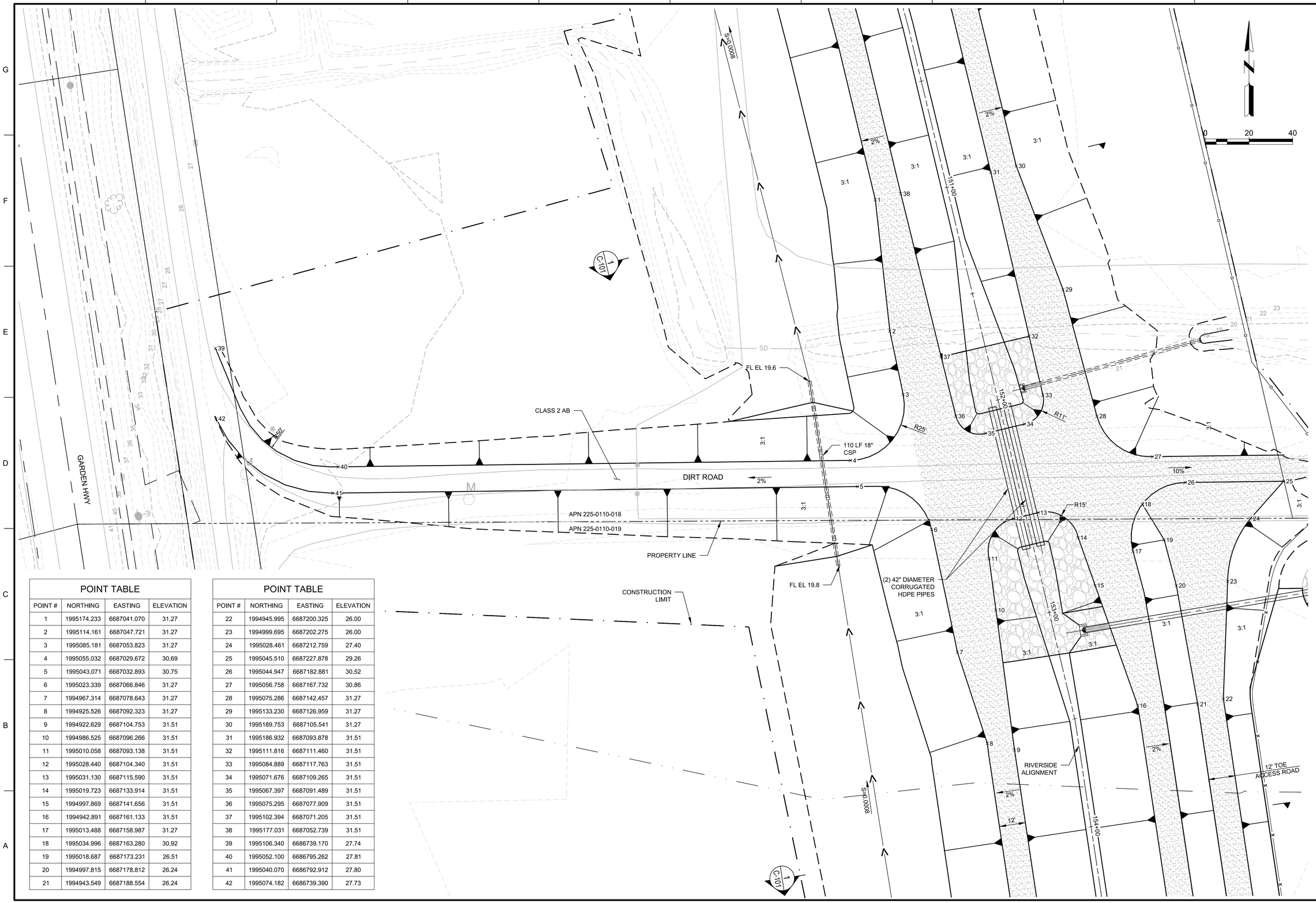

POINT TABLE			
POINT #	NORTHING	EASTING	ELEVATION
1	1995174.233	6687041.070	31.27
2	1995114.161	6687047.721	31.27
3	1995085.181	6687053.823	31.27
4	1995055.032	6687029.672	30.69
5	1995043.071	6687032.893	30.75
6	1995023.339	6687066.846	31.27
7	1994967.314	6687078.643	31.27
8	1994925.526	6687092.323	31.27
9	1994922.629	6687104.753	31.51
10	1994986.525	6687096.266	31.51
11	1995010.058	6687093.138	31.51
12	1995028.440	6687104.340	31.51
13	1995031.130	6687115.590	31.51
14	1995019.723	6687133.914	31.51
15	1994997.869	6687141.656	31.51
16	1994942.891	6687161.133	31.51
17	1995013.488	6687158.987	31.27
18	1995034.996	6687163.280	30.92
19	1995018.687	6687173.231	26.51
20	1994997.815	6687178.812	26.24
21	1994943.549	6687188.554	26.24

POINT TABLE			
POINT #	NORTHING	EASTING	ELEVATION
22	1994945.995	6687200.325	26.00
23	1994999.695	6687202.275	26.00
24	1995028.461	6687212.759	27.40
25	1995045.510	6687227.878	29.26
26	1995044.947	6687182.881	30.52
27	1995056.758	6687167.732	30.86
28	1995075.286	6687142.457	31.27
29	1995133.230	6687126.959	31.27
30	1995189.753	6687105.541	31.27
31	1995186.932	6687093.878	31.51
32	1995111.816	6687111.460	31.51
33	1995084.889	6687117.763	31.51
34	1995071.676	6687109.265	31.51
35	1995067.397	6687091.489	31.51
36	1995075.295	6687077.909	31.51
37	1995102.394	6687071.205	31.51
38	1995177.031	6687052.739	31.51
39	1995106.340	6686739.170	27.74
40	1995052.100	6686795.262	27.81
41	1995040.070	6686792.912	27.80
42	1995074.182	6686739.390	27.73

US Army Corps of Engineers®

MARK	DESCRIPTION	DATE

ISSUE DATE: 05/06/2019
SOLICITATION NO.:
CONTRACT NO.:
FILE NO: 1-04-0642
FILE NAME: GRADING PLAN.dwg

DESIGNED BY: C. STEPPER
DRAWN BY: E. DIOCSON
CHECKED BY: S. SULLIVAN
SUBMITTED BY: J. KASHIWADA
SIZE: ANSI D
SPEC NO: 2122

U.S. ARMY CORPS OF ENGINEERS
SACRAMENTO DISTRICT

MEAD & HUNT, INC.
180 PROMENADE CIRCLE, SUITE 240
SACRAMENTO, CA 95834

AMERICAN RIVER COMMON FEATURES
NATOMAS BASIN REACH B
RIVERSIDE CANAL PHASE 2 RELOCATION PROJECT

NOT USED

SHEET ID
CG-101

X:\19415000\161390.01\TECH\CAD\Riverside Canal\GRADING PLAN.dwg

FINAL ISSUE FOR BID

NOT USED

US Army Corps of Engineers®

MARK	DESCRIPTION	DATE

DESIGNED BY: C.STEPHENS
DRAWN BY: E. DIOCSON
CHECKED BY: S. SULLIVAN
SUBMITTED BY: J. KASHIWADA
SIZE: ANSI D
ISSUE DATE: 09/30/2019
SOLICITATION NO.:
CONTRACT NO.:
FILE NO: I-04-0842
FILE NAME: GRADING PLAN.dwg
SPEC NO: 2122

U.S. ARMY CORPS OF ENGINEERS
SACRAMENTO DISTRICT

MEAD & HUNT, INC.
180 PROMENADE CIRCLE, SUITE 240
SACRAMENTO, CA 95834

AMERICAN RIVER COMMON FEATURES
NATOMAS BASIN REACH B
RIVERSIDE CANAL PHASE 2 RELOCATION PROJECT

NOT USED

SHEET ID

CG-102

X:\19941500\161390.01\TECH\CAD\Riverside Canal\GRADING PLAN.dwg

FINAL ISSUE FOR BID

POINT TABLE			
POINT #	NORTHING	EASTING	ELEVATION
45	1993380.630	6686991.953	35.50
46	1993400.392	6686988.879	35.50
47	1993425.930	6686995.462	32.89
48	1993431.941	6687073.842	32.11
49	1993480.458	6687081.306	25.31
50	1993498.467	6687255.742	24.96
51	1993441.575	6687264.250	30.71
52	1993421.778	6687267.211	30.71
53	1993310.279	6687283.886	30.60
54	1993269.989	6687014.482	34.27

POINT TABLE			
POINT #	NORTHING	EASTING	ELEVATION
55	1993263.046	6687019.553	33.84
56	1993241.905	6687294.112	27.24
57	1993245.917	6687303.625	25.84
58	1993311.759	6687293.776	30.27
59	1993423.304	6687277.298	30.38
60	1993443.055	6687274.141	30.38
61	1993499.947	6687265.632	24.15
62	1993505.533	6687285.162	24.77
63	1993448.874	6687313.049	31.17
64	1993428.549	6687312.370	31.09

POINT TABLE			
POINT #	NORTHING	EASTING	ELEVATION
65	1993400.507	6687303.482	30.78
66	1993389.627	6687302.523	30.77
67	1993314.712	6687313.524	30.77
68	1993247.483	6687323.549	27.47
69	1993319.388	6687344.875	31.40
70	1993373.033	6687336.839	31.50
71	1993354.645	6687360.855	31.51
72	1993357.184	6687377.664	31.51
73	1993381.813	6687395.262	31.51
74	1993468.472	6687394.341	31.27

POINT TABLE			
POINT #	NORTHING	EASTING	ELEVATION
110	1993185.965	6687312.590	23.00
111	1993328.101	6687403.308	31.40
112	1993236.452	6687325.194	26.92
113	1993254.577	6687446.736	26.89

POINT TABLE			
POINT #	NORTHING	EASTING	ELEVATION
75	1993466.834	6687395.325	31.25
76	1993463.420	6687400.442	31.02
77	1993465.906	6687403.398	30.61
78	1993527.642	6687400.731	26.24
79	1993523.571	6687401.251	26.30
80	1993531.374	6687412.306	26.00
81	1993523.971	6687413.325	26.06
82	1993463.944	6687415.406	30.65
83	1993461.071	6687415.672	30.76
84	1993269.043	6687486.124	25.34

POINT TABLE			
POINT #	NORTHING	EASTING	ELEVATION
85	1993262.940	6687535.996	25.76
86	1993263.122	6687530.057	25.74
87	1993262.341	6687493.053	25.50
88	1993236.342	6687493.259	25.50
89	1993237.194	6687530.204	25.22
90	1993238.019	6687535.996	24.95
91	1993231.263	6687483.351	25.34
92	1993217.686	6687460.840	23.81
93	1993178.375	6687427.338	23.87
94	1993182.316	6687414.595	23.62
95	1993211.018	6687378.882	23.57

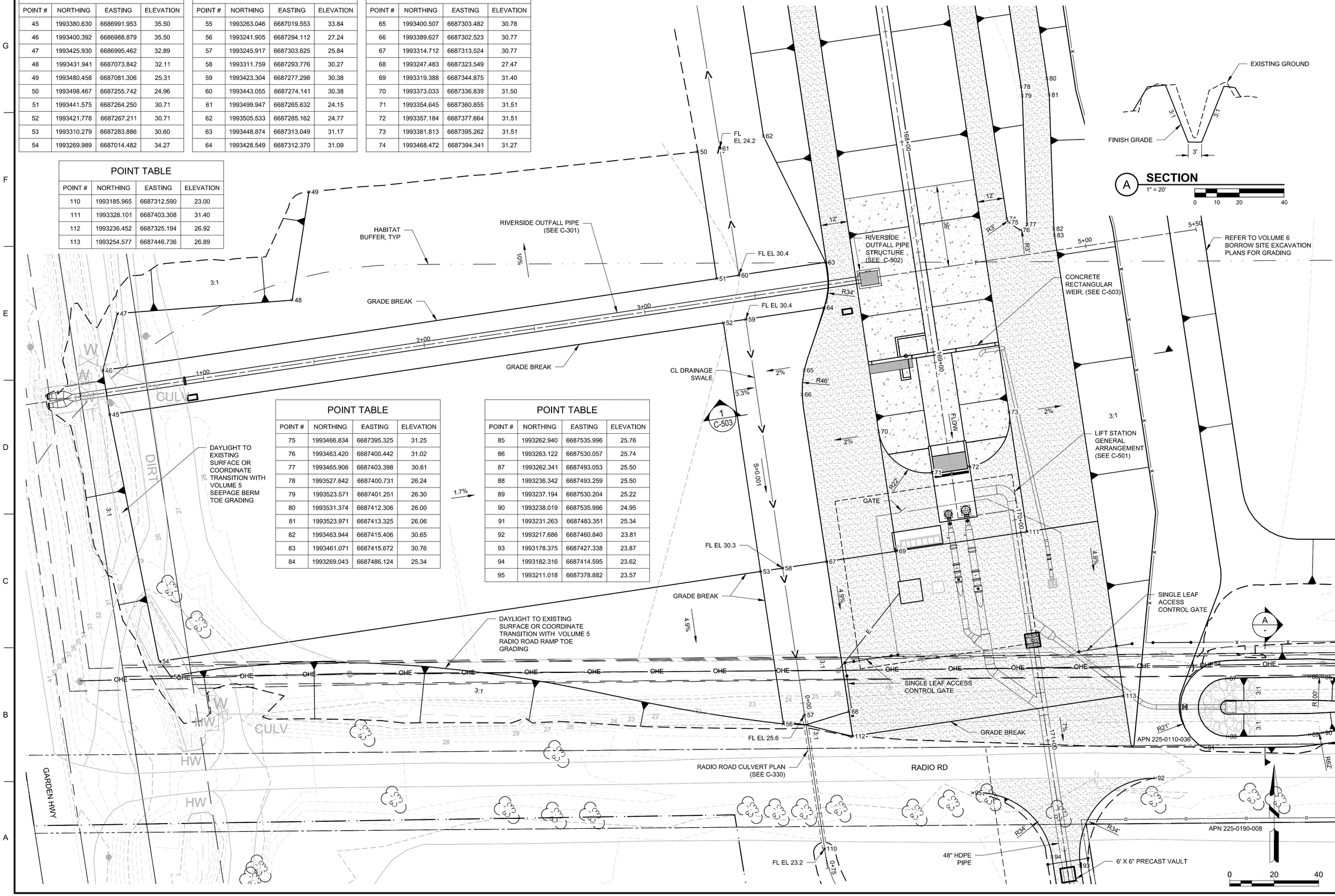

US Army Corps of Engineers®

MARK	DESCRIPTION	DATE

DESIGNED BY: C. STEPPER
DRAWN BY: E. DIOCSON
CHECKED BY: S. SULLIVAN
SUBMITTED BY: J. KASHIWADA
SIZE: ANSI D
SPEC NO: 2122
ISSUE DATE: 05/06/2019
SOLICITATION NO.:
CONTRACT NO.:
FILE NO: T-04-0642
FILE NAME: GRADING PLAN.dwg

U.S. ARMY CORPS OF ENGINEERS
SACRAMENTO DISTRICT

MEAD & HUNT, INC.
180 PROMENADE CIRCLE, SUITE 240
SACRAMENTO, CA 95834

AMERICAN RIVER COMMON FEATURES
NATOMAS BASIN REACH B
RIVERSIDE CANAL PHASE 2 RELOCATION PROJECT

LIFT STATION GRADING PLAN

SHEET ID
CG-103

X:\19415001\161390.01\TECH\CAD\Riverside Canal\GRADING PLAN.dwg

FINAL ISSUE FOR BID

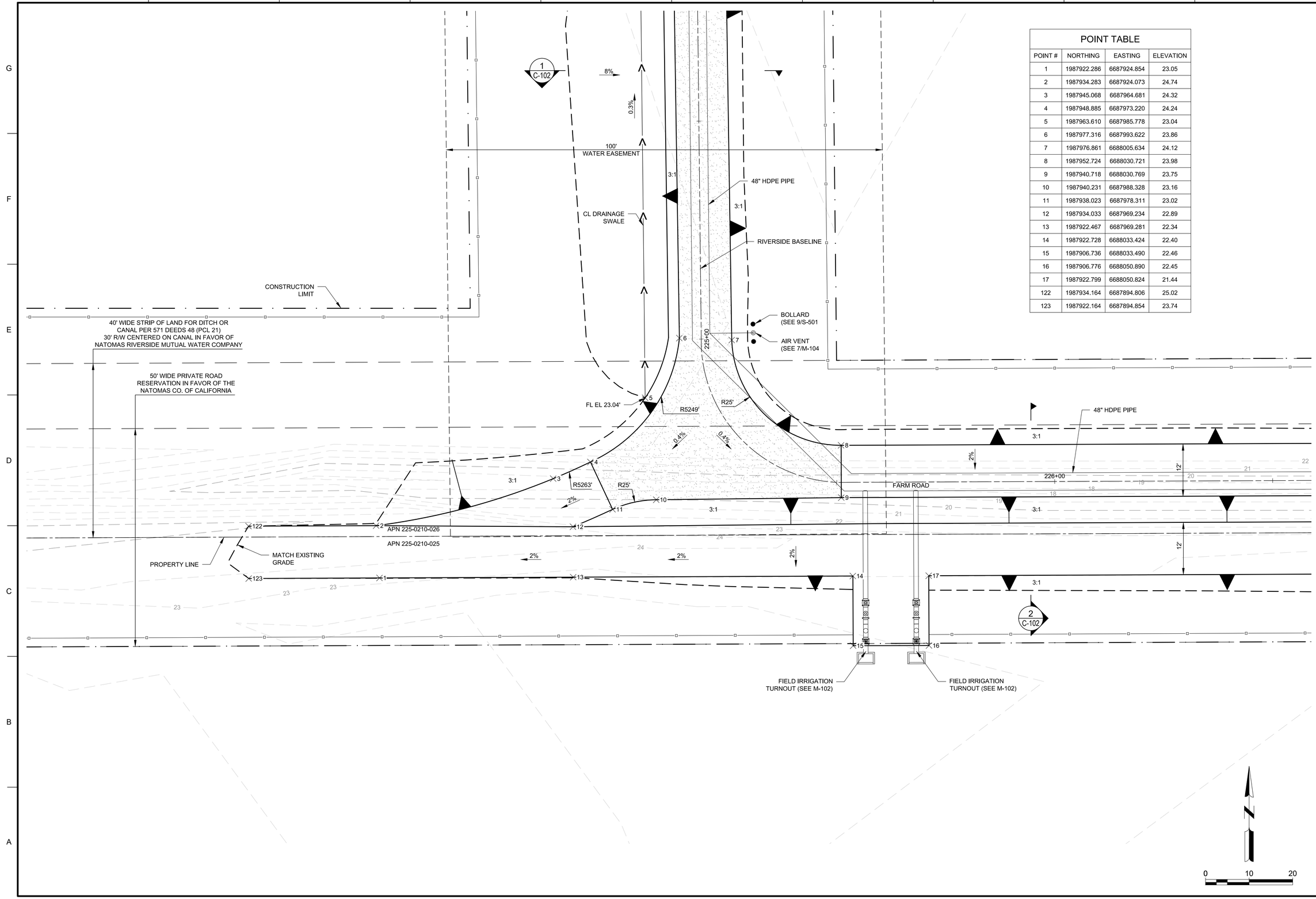

POINT TABLE			
POINT #	NORTHING	EASTING	ELEVATION
1	1987922.286	6687924.854	23.05
2	1987934.283	6687924.073	24.74
3	1987945.068	6687964.681	24.32
4	1987948.885	6687973.220	24.24
5	1987963.610	6687985.778	23.04
6	1987977.316	6687993.622	23.86
7	1987976.861	6688005.634	24.12
8	1987952.724	6688030.721	23.98
9	1987940.718	6688030.769	23.75
10	1987940.231	6687988.328	23.16
11	1987938.023	6687978.311	23.02
12	1987934.033	6687969.234	22.89
13	1987922.467	6687969.281	22.34
14	1987922.728	6688033.424	22.40
15	1987906.736	6688033.490	22.46
16	1987906.776	6688050.890	22.45
17	1987922.799	6688050.824	21.44
122	1987934.164	6687894.806	25.02
123	1987922.164	6687894.854	23.74

US Army Corps of Engineers®

MARK	DESCRIPTION	DATE

ISSUE DATE: 05/06/2019
SOLICITATION NO.:
CONTRACT NO.:
FILE NO: 1-04-0642
FILE NAME: CIVIL GRADING PLAN.dwg
DESIGNED BY: C. STEPPER
DRAWN BY: E. DIOCSON
CHECKED BY: S. SULLIVAN
SUBMITTED BY: J. KASHIWADA
SIZE: ANSI D
SPEC NO:
2122

U.S. ARMY CORPS OF ENGINEERS
SACRAMENTO DISTRICT

MEAD & HUNT, INC.
180 PROMENADE CIRCLE, SUITE 240
SACRAMENTO, CA 95834

AMERICAN RIVER COMMON FEATURES
NATOMAS BASIN REACH B
RIVERSIDE CANAL PHASE 2 RELOCATION PROJECT

FARM ROAD GRADING PLAN

SHEET ID

CG-104

X:\19415001\161390.01\TECH\CAD\Riverside Canal\CIVIL GRADING PLAN.dwg

FINAL ISSUE FOR BID

POINT TABLE			
POINT #	NORTHING	EASTING	ELEVATION
18	1987956.285	6688907.791	22.16
19	1987977.688	6688930.052	18.62
20	1987967.058	6688940.583	18.85
21	1987945.176	6688959.013	20.27
22	1987961.300	6689017.486	16.42
23	1987954.125	6689009.248	18.78
24	1987952.239	6689008.390	18.99
25	1987944.074	6689008.390	19.00
26	1987941.714	6689010.065	18.95
27	1987939.339	6689016.861	16.81
28	1987935.223	6689029.838	17.35
29	1987914.640	6689003.589	17.67
30	1987887.713	6688968.171	17.89

POINT TABLE			
POINT #	NORTHING	EASTING	ELEVATION
31	1987855.502	6688960.562	19.05
32	1987851.348	6688978.079	15.74
33	1987845.705	6688976.741	15.80
34	1987849.858	6688959.227	18.92
35	1987855.442	6688948.218	16.79
36	1987895.768	6688948.018	18.70
37	1987926.284	6688907.923	20.53
38	1987948.202	6689016.452	13.18
39	1987949.742	6689024.453	13.26
40	1987946.741	6689024.453	13.36
124	1987926.161	6688877.549	20.58
125	1987918.117	6688859.557	17.93
126	1987918.058	6688840.666	17.93

POINT TABLE			
POINT #	NORTHING	EASTING	ELEVATION
127	1987906.040	6688834.949	18.27
128	1987906.117	6688859.595	17.69
129	1987922.624	6688892.035	17.69
130	1987944.365	6688907.837	22.36
131	1987938.310	6688907.877	20.33
132	1987933.873	6688930.181	22.05
133	1987884.670	6688935.400	15.89
134	1987884.170	6688937.336	15.89
135	1987966.390	6688955.690	15.54
136	1987982.366	6688962.599	15.54
137	1987981.731	6688964.495	16.18
138	1987964.801	6688960.431	15.54
139	1987935.313	6689020.878	17.50

LATERAL 13 ALIGNMENT LINE DATA		
LINE #	LENGTH	BEARING
L6	150.00	N89° 46' 54.56"E

CONSTRUCTION LIMIT
48" HDPE PIPE
RIVERSIDE BASELINE
FARM ROAD
PROPERTY LINE
APN 225-0210-026
APN 225-0210-025
40' WIDE STRIP OF LAND FOR DITCH OR CANAL PER 571 DEEDS 48 (PCL 21) 30' R/W CENTERED ON CANAL IN FAVOR OF NATOMAS RIVERSIDE MUTUAL WATER COMPANY
50' WIDE PRIVATE ROAD RESERVATION IN FAVOR OF THE NATOMAS CO. OF CALIFORNIA
MATCH EXISTING GRADE
2 C-102
INV. EL 20.12
INV. EL 15.67
INV. EL 15.59
FIELD IRRIGATION TURNOUT (SEE M-102)
FARM ROAD CULVERT 1 PLAN (SEE C-331)
LATERAL 13 OUTLET INV EL 13.68'
CONSTRUCTION LIMIT
RIVERSIDE BASELINE
36" HDPE PIPE
12' ACCESS ROAD
FIELD IRRIGATION TURNOUT (SEE M-102)
2' WIDE
3:1
2%
4%
5%
6%
4.5%
3%
R23'
R52'
R28'
R40'
R26'
R29'
R3'
R245'
R2'
R35'
R88'
234+00
0+00
1+00
1+50
2+00
235+00

POINT TABLE			
POINT #	NORTHING	EASTING	ELEVATION
140	1987929.290	6689020.870	0.00
141	1987929.311	6689010.908	0.00
142	1987927.730	6689009.246	0.00
143	1987925.731	6689010.370	0.00
144	1987924.430	6689015.186	0.00
145	1987922.553	6689027.044	15.66
146	1987921.686	6689040.753	0.00
147	1987913.221	6689040.217	0.00

0 10 20

US Army Corps of Engineers®

MARK	DESCRIPTION	DATE

DESIGNED BY: C. STEPPER
DRAWN BY: E. DIOCSON
CHECKED BY: S. SULLIVAN
SUBMITTED BY: J. KASHIWADA
SIZE: ANSI D
ISSUE DATE: 05/06/2019
SOLICITATION NO.:
CONTRACT NO.:
FILE NO: 1-04-0642
FILE NAME: CIVIL GRADING PLAN.dwg
SPEC NO: 21222

U.S. ARMY CORPS OF ENGINEERS
SACRAMENTO DISTRICT

MEAD & HUNT, INC.
180 PROMENADE CIRCLE, SUITE 240
SACRAMENTO, CA 95834

AMERICAN RIVER COMMON FEATURES
NATOMAS BASIN REACH B
RIVERSIDE CANAL PHASE 2 RELOCATION PROJECT

FARM ROAD GRADING PLAN

SHEET ID
CG-105

X:\19415001\161390.01\TECH\CAD\Riverside Canal\CIVIL GRADING PLAN.dwg

FINAL ISSUE FOR BID

POINT TABLE			
POINT #	NORTHING	EASTING	ELEVATION
41	1986753.953	6688699.397	17.49
42	1986756.721	6688687.720	17.73
43	1986730.963	6688690.856	17.33
44	1986738.369	6688700.730	17.11
45	1986581.086	6688663.436	17.88
46	1986590.250	6688655.688	18.14
47	1986570.532	6688643.576	18.11
48	1986567.764	6688655.253	17.87

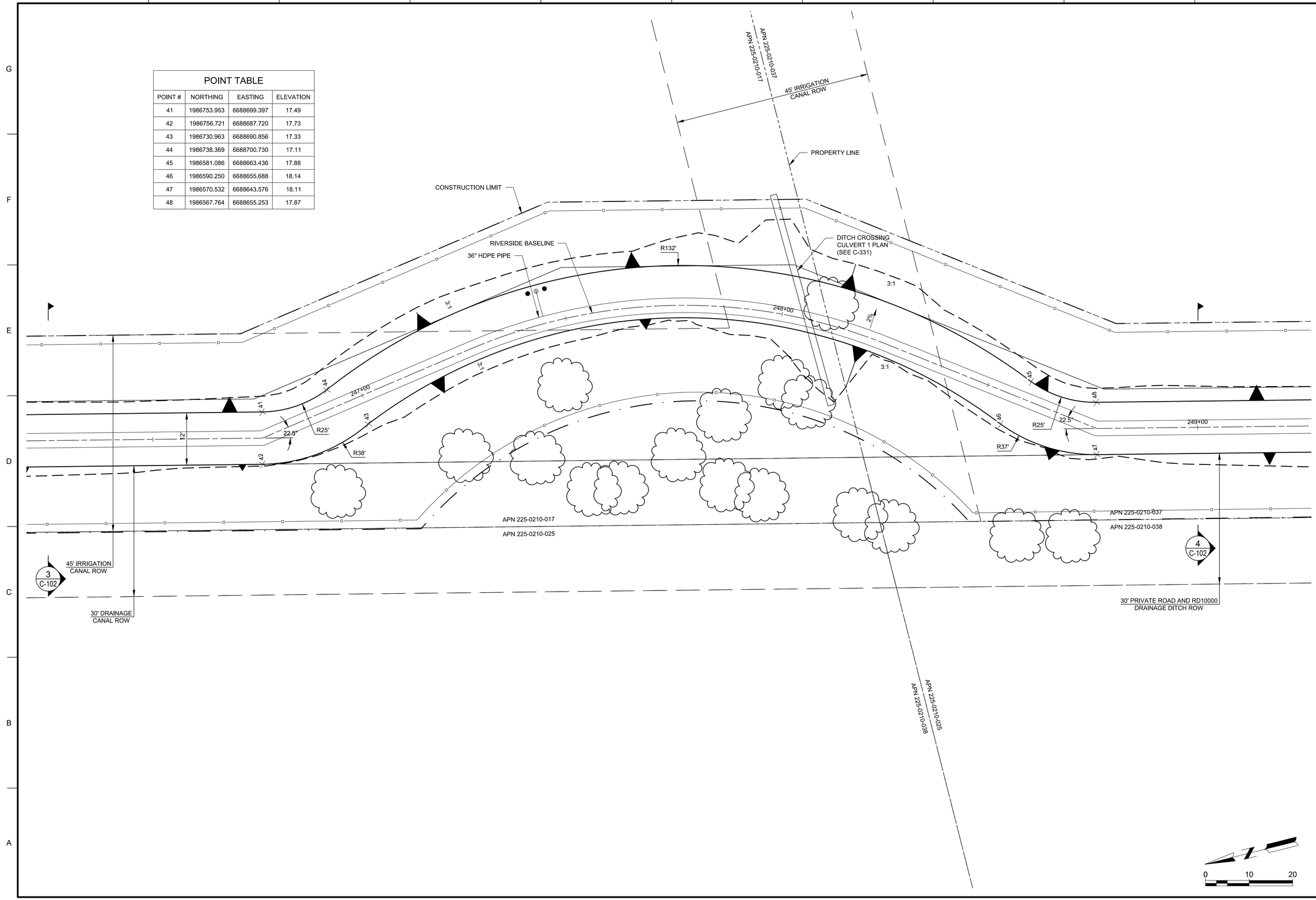

US Army Corps of Engineers®

MARK	DESCRIPTION	DATE

DESIGNED BY: C. STEPHEN
DRAWN BY: E. DIOCSON
CHECKED BY: S. SULLIVAN
SUBMITTED BY: J. KASHIWADA
SIZE: ANSI D
ISSUE DATE: 05/06/2019
SOLICITATION NO.:
CONTRACT NO.:
FILE NO: 1-04-0842
FILE NAME: CIVIL GRADING PLAN.dwg
SPEC NO: 21222

U.S. ARMY CORPS OF ENGINEERS
SACRAMENTO DISTRICT

MEAD & HUNT, INC.
180 PROMENADE CIRCLE, SUITE 240
SACRAMENTO, CA 95834

AMERICAN RIVER COMMON FEATURES
NATOMAS BASIN REACH B
RIVERSIDE CANAL PHASE 2 RELOCATION PROJECT

PIPELINE ACCESS ROAD GRADING PLAN

SHEET ID

CG-106

X:\19941500\161390.01\TECH\CAD\Riverside Canal\CIVIL GRADING PLAN.dwg

FINAL ISSUE FOR BID

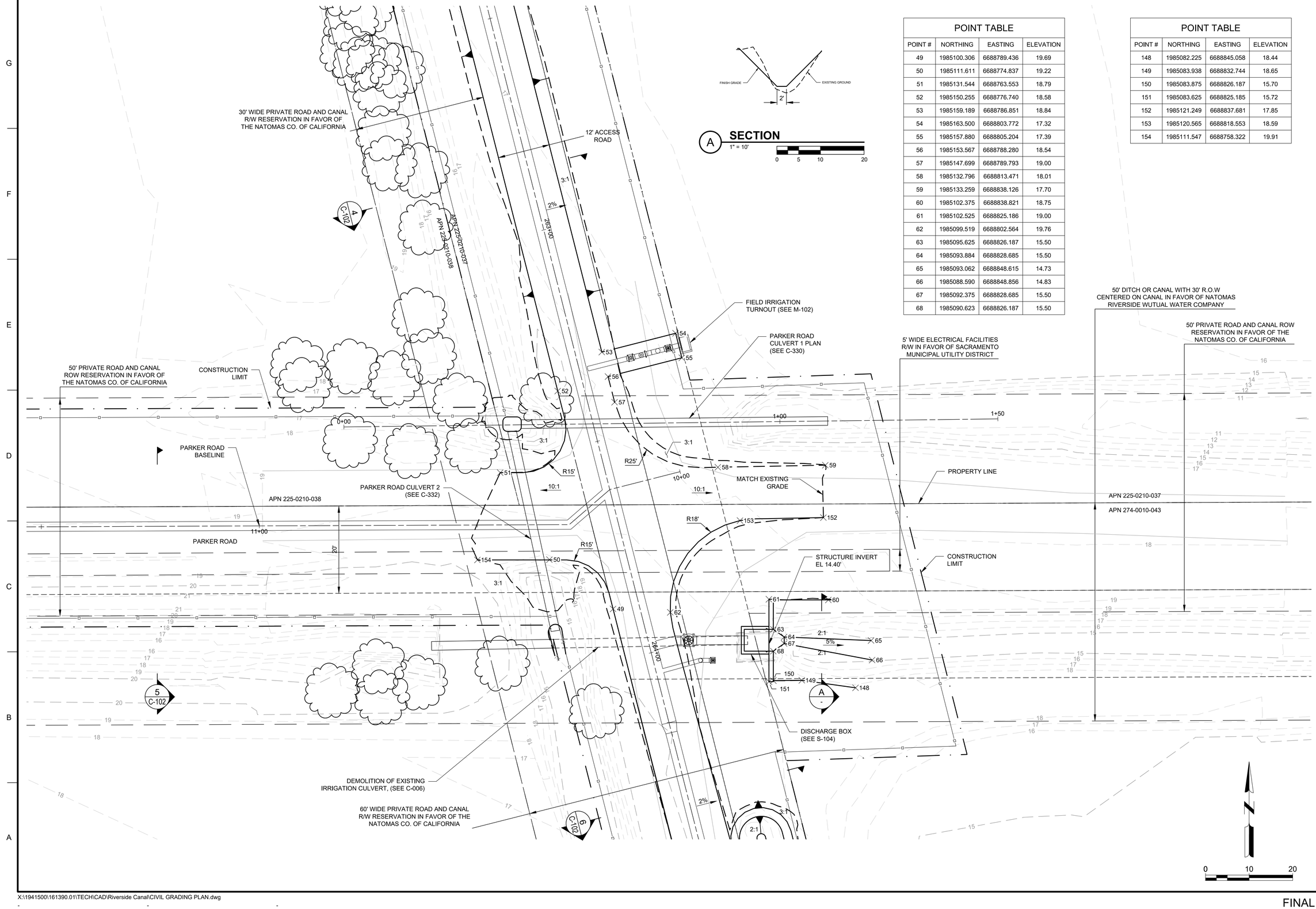

FINISH GRADE
EXISTING GROUND
2'

A **SECTION**
1" = 10'
0 5 10 20

POINT TABLE			
POINT #	NORTHING	EASTING	ELEVATION
49	1985100.306	6688789.436	19.69
50	1985111.611	6688774.837	19.22
51	1985131.544	6688763.553	18.79
52	1985150.255	6688776.740	18.58
53	1985159.189	6688786.851	18.84
54	1985163.500	6688803.772	17.32
55	1985157.880	6688805.204	17.39
56	1985153.567	6688788.280	18.54
57	1985147.699	6688789.793	19.00
58	1985132.796	6688813.471	18.01
59	1985133.259	6688838.126	17.70
60	1985102.375	6688838.821	18.75
61	1985102.525	6688825.186	19.00
62	1985099.519	6688802.564	19.76
63	1985095.625	6688826.187	15.50
64	1985093.884	6688828.685	15.50
65	1985093.062	6688848.615	14.73
66	1985088.590	6688848.856	14.83
67	1985092.375	6688828.685	15.50
68	1985090.623	6688826.187	15.50

POINT TABLE			
POINT #	NORTHING	EASTING	ELEVATION
148	1985082.225	6688845.058	18.44
149	1985083.938	6688832.744	18.65
150	1985083.875	6688826.187	15.70
151	1985083.625	6688825.185	15.72
152	1985121.249	6688837.681	17.85
153	1985120.565	6688818.553	18.59
154	1985111.547	6688758.322	19.91

US Army Corps of Engineers®

MARK	DESCRIPTION	DATE

DESIGNED BY: C. STEPPER
DRAWN BY: E. DIOCSON
CHECKED BY: S. SULLIVAN
SUBMITTED BY: J. KASHIWADA
ISSUE DATE: 05/06/2019
SOLICITATION NO.:
CONTRACT NO.:
FILE NO: 1-04-0642
FILE NAME: CIVIL GRADING PLAN.dwg
SIZE: ANSI D
SPEC NO: 21222

U.S. ARMY CORPS OF ENGINEERS
SACRAMENTO DISTRICT

MEAD & HUNT, INC.
180 PROMENADE CIRCLE, SUITE 240
SACRAMENTO, CA 95834

AMERICAN RIVER COMMON FEATURES
NATOMAS BASIN REACH B
RIVERSIDE CANAL PHASE 2 RELOCATION PROJECT

PARKER ROAD GRADING PLAN

SHEET ID

CG-107

X:\19415001\161390.01\TECH\CAD\Riverside Canal\CIVIL GRADING PLAN.dwg

FINAL ISSUE FOR BID

FIELD IRRIGATION TURNOUT (SEE M-102)

40' WIDE R/W FOR PUBLIC HIGHWAY AND ROAD IN FAVOR OF SACRAMENTO COUNTY

BRYTE BEND ROAD

BACKFILL TO DRAIN TOWARD FIELD

STA: 0+00.00
OFF: 0.00'
N: 1982407.4709
E: 6690511.4704

TREE ROAD CULVERT 1 (SEE 1\CG-108)

FIELD IRRIGATION TURNOUT (SEE M-102)

STA: 0+50.00
OFF: 0.00'
N: 1982374.4244
E: 6690548.9928

60' WIDE PRIVATE ROAD AND CANAL R/W RESERVATION IN FAVOR OF THE NATOMAS CO. OF CALIFORNIA

BRYTE BEND CULVERT 1 PLAN (SEE C-332)

PROPERTY LINE

APN 224-0010-050

APN 274-0010-069

BRYTE BEND LATERAL TURNOUT OUTLET INV EL 15.5'

FIELD IRRIGATION TURNOUT (SEE M-102)

3:1

VARIES

CONSTRUCTION LIMIT

SLOPE TO FIELD ELEVATION, FILL IRRIGATION CANAL AND REMOVE BERMS

40' WIDE STRIP OF LAND FOR DITCH OR CANAL PER 571 DEEDS 48 (PCL 9)
30' R/W CENTERED ON CANAL IN FAVOR OF NATOMAS RIVERSIDE MUTUAL WATER COMPANY

BACKFILL TO DRAIN TOWARD FIELD

BRYTE BEND CULVERT 2 PLAN (SEE C-332)

TREE ROAD

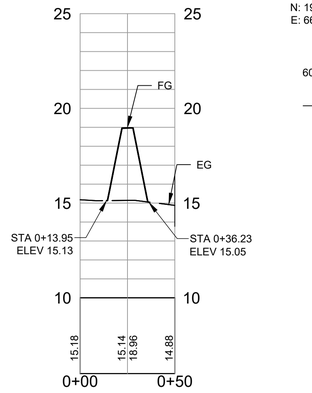

1 **TREE ROAD CULVERT 1 PROFILE**
1" = 40'
0 20 40 80

TREE ROAD CULVERT 1 ALIGNMENT LINE DATA		
LINE #	LENGTH	BEARING
L1	50.00	S48° 37' 44.88"E

BRYTE BEND LATERAL ALIGNMENT LINE DATA		
LINE #	LENGTH	BEARING
L7	47.00	N42° 21' 55.43"E
L8	38.00	N0° 12' 48.83"W

POINT TABLE			
POINT #	NORTHING	EASTING	ELEVATION
155	1982357.484	6690619.820	19.29
156	1982299.705	6690655.999	20.31

POINT TABLE			
POINT #	NORTHING	EASTING	ELEVATION
69	1982410.188	6690543.762	17.59
70	1982387.986	6690523.633	17.47
71	1982384.089	6690527.930	17.46
72	1982406.293	6690548.059	17.58
73	1982348.953	6690611.363	19.30
74	1982332.824	6690626.003	19.80
75	1982310.078	6690632.334	19.28
76	1982307.246	6690612.699	18.22
77	1982296.207	6690618.001	15.83
78	1982307.116	6690618.257	15.50
79	1982307.458	6690625.166	15.50
80	1982296.132	6690625.220	16.18
81	1982268.921	6690655.255	21.00
82	1982281.310	6690677.493	20.30
83	1982307.595	6690665.164	19.30
84	1982325.967	6690656.114	20.55
85	1982366.705	6690658.048	20.55
86	1982387.923	6690658.444	20.55
87	1982419.251	6690634.713	18.75
88	1982419.397	6690625.806	13.67
89	1982408.488	6690624.673	13.60
90	1982408.146	6690617.764	13.60
91	1982419.472	6690617.711	13.62
92	1982408.565	6690612.196	17.61
93	1982405.562	6690635.266	18.97
94	1982381.516	6690593.260	18.98
95	1982408.490	6690563.549	18.58
96	1982432.408	6690585.229	17.18
97	1982436.303	6690580.932	17.28
98	1982412.385	6690559.251	18.53

0 10 20

X:\19415000\161390.01\TECH\CAD\Riverside Canal\CIVIL GRADING PLAN.dwg

FINAL ISSUE FOR BID

US Army Corps of Engineers®

MARK	DESCRIPTION	DATE

DESIGNED BY: C. STEPPER
DRAWN BY: E. DIOCSON
CHECKED BY: S. SULLIVAN
SUBMITTED BY: J. KASHIWADA
SIZE: ANSI D
ISSUE DATE: 05/06/2019
SOLICITATION NO.:
CONTRACT NO.:
FILE NO: 1-04-0642
FILE NAME: CIVIL GRADING PLAN.dwg
SPEC NO: 2122

U.S. ARMY CORPS OF ENGINEERS
SACRAMENTO DISTRICT

MEAD & HUNT, INC.
180 PROMENADE CIRCLE, SUITE 240
SACRAMENTO, CA 95834

AMERICAN RIVER COMMON FEATURES
NATOMAS BASIN REACH B
RIVERSIDE CANAL PHASE 2 RELOCATION PROJECT

BRYTE BEND ROAD GRADING PLAN

SHEET ID
CG-108

POINT TABLE			
POINT #	NORTHING	EASTING	ELEVATION
99	1982017.166	6690967.675	21.00
100	1981994.120	6691000.021	21.62
101	1981969.530	6690989.206	18.50
102	1981966.140	6690989.919	18.50
103	1981963.732	6690995.396	18.50
104	1981989.625	6691006.774	21.71
105	1981948.435	6691098.607	20.61
106	1981944.986	6691109.186	19.75
107	1981956.823	6691111.591	20.00
108	1981967.500	6691107.247	18.26
109	1981969.386	6691107.911	17.75
110	1981988.849	6691072.975	19.80

POINT TABLE			
POINT #	NORTHING	EASTING	ELEVATION
111	1981983.137	6691070.522	17.53
112	1981980.383	6691069.333	17.65
113	1981973.911	6691066.548	20.21
114	1981983.837	6691060.914	17.46
115	1981986.581	6691062.129	17.38
116	1981997.134	6691053.719	21.87
117	1981994.572	6691047.174	21.92
118	1981989.072	6691044.730	21.88
119	1981982.471	6691047.269	21.37
120	1982033.697	6690968.199	21.10
121	1982036.952	6690968.988	21.02
157	1982011.695	6690995.042	21.64

TREE ROAD CULVERT 2 ALIGNMENT LINE DATA		
LINE #	LENGTH	BEARING
L2	14.71	S58° 01' 46.82"E
L3	15.30	S55° 05' 01.72"E
L4	45.00	S59° 09' 25.54"E

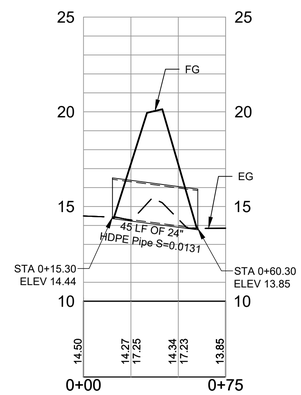

2 **TREE ROAD CULVERT 2 PROFILE**
1" = 40'

0 20 40 80

0 10 20

3:1
VARIES
SLOPE TO FIELD ELEVATION, FILL IRRIGATION CANAL AND REMOVE BERMS
CONSTRUCTION LIMIT
TREE ROAD
30' WIDE DRAINAGE CANAL R/W IN FAVOR OF RD 1000
40' WIDE STRIP OF LAND FOR DITCH OR CANAL PER 571 DEEDS 48 (PCL 9) 30' R/W CENTERED ON CANAL IN FAVOR OF NATOMAS RIVERSIDE MUTUAL WATER COMPANY
8 C-102
302+00
303+00
R20'
R386'
R385'
R5'
2%
STA: 0+00.00
OFF: 0.00'
N: 1981999.0472
E: 6690966.0239
STA: 0+75.00
OFF: 0.00'
N: 1981959.4335
E: 6691029.6797
TREE ROAD LATERAL TURNOUT CANAL INV. EL 17.3
PROPERTY LINE
TREE ROAD CULVERT 2 (SEE DETAIL 2)
FIELD IRRIGATION TURNOUT (SEE M-102)
L2
L3
L4
L5
0+00
0+75

US Army Corps of Engineers®

MARK	DESCRIPTION	DATE

ISSUE DATE: 05/06/2019
SOLICITATION NO.:
CONTRACT NO.:
FILE NO: 1-04-0642
FILE NAME: CIVIL GRADING PLAN.dwg
SPEC NO: 2122
SIZE: ANSI D

DESIGNED BY: C. STEPPER
DRAWN BY: E. DIOCSON
CHECKED BY: S. SULLIVAN
SUBMITTED BY: J. KASHIWADA

U.S. ARMY CORPS OF ENGINEERS
SACRAMENTO DISTRICT

MEAD & HUNT, INC.
180 PROMENADE CIRCLE, SUITE 240
SACRAMENTO, CA 95834

AMERICAN RIVER COMMON FEATURES
NATOMAS BASIN REACH B
RIVERSIDE CANAL PHASE 2 RELOCATION PROJECT

TREE ROAD GRADING PLAN

SHEET ID
CG-109

X:\19941500\161390.01\TECH\CAD\Riverside Canal\CIVIL GRADING PLAN.dwg

FINAL ISSUE FOR BID

GENERAL STRUCTURAL NOTES:

G-1 SEE SHEET G-004 FOR ADDITIONAL GENERAL NOTES.

G-2 ALL PIPE TERMINATING AT A CONCRETE WALL SHALL BE FITTED WITH A FLEXIBLE RESILIENT COUPLING AT THE TERMINUS (UNO).

G-3 SEE CIVIL OR ANY RELEVANT DRAWINGS FOR SIZE AND LOCATION OF ALL OPENINGS REQUIRED FOR DUCTS, PIPES AND ALL PIPES SLEEVES, ELECTRICAL CONDUITS AND OTHER ITEMS TO BE EMBEDDED IN CONCRETE OR OTHERWISE INCORPORATED IN STRUCTURAL WORK.

G-4 NO PIPES OR DUCTS SHALL BE EMBEDDED INTO STRUCTURAL CONCRETE UNLESS SO SHOWN ON THE PLANS OR APPROVAL BY THE CONTRACTING OFFICER.

SHORING AND EXCAVATION NOTES:

SE-1 CONTRACTOR SHALL CONSULT THE GEOTECHNICAL REPORT AND THE GEOTECHNICAL ENGINEER IF ADDITIONAL GUIDANCE IS REQUIRED PER THE CONTRACT DOCUMENTS FOR RECOMMENDATIONS ON ALL CONSTRUCTION SITE CONDITIONS REQUIRING EXCAVATIONS, SHORING, DEWATERING AND BRACING.

SE-2 ALL ERECTION AND EXCAVATION PROCEDURES SHALL CONFORM TO CAL-OSHA STANDARDS. ANY DEVIATIONS MUST BE APPROVED BY CAL-OSHA PRIOR TO ERECTION. SHORING AND BRACING SHALL BE THE SOLE RESPONSIBILITY OF THE CONTRACTOR TO ENSURE THAT SAFETY AND STRUCTURAL INTEGRITY IS NOT COMPROMISED DURING THE ENTIRE PROCESS. SAFETY ISSUES SHALL BE IN ACCORDANCE WITH ALL NATIONAL, STATE AND LOCAL SAFETY ORDINANCES. REQUIREMENTS OF THE ARMY CORPS OF ENGINEERS SAFETY AND HEALTH MANUAL, EM 385-1-1 SHALL BE ADHERED TO.

SE-3 THE CONTRACTOR SHALL BE SOLELY RESPONSIBLE FOR ALL EXCAVATION PROCEDURES INCLUDING LAGGING, SHORING AND PROTECTION OF ADJACENT PROPERTY, STRUCTURES, STREETS AND UTILITIES IN ACCORDANCE WITH ALL NATIONAL, STATE AND LOCAL SAFETY ORDINANCES.

STRUCTURAL DESIGN CRITERIA:

1. DESIGN REFERENCES (USED FOR GUIDANCE):

   2016 CALIFORNIA BUILDING CODE (CBC) - DESIGN DATA
   USACE ENGINEERING MANUAL EM 1110-2-2100 - LOAD CONDITIONS
   USACE ENGINEERING MANUAL EM 1110-2-3104 - PUMPING STATIONS
   USACE ENGINEERING MANUAL EM 1110-2-2502 - RETAINING WALLS
   USACE ENGINEERING MANUAL EM 1110-2-2400 - TRASH RACK
   ACI 350-06 - CONCRETE DESIGN

2. WIND DESIGN DATA (CBC 1603.1.4)

BASIC WIND SPEED (3-SECOND GUST):	V3S=110 MPH
RISK CATEGORY:	II
WIND IMPORTANCE FACTOR:	IW=1.0
WIND EXPOSURE:	C

3. EARTHQUAKE DESIGN DATA (CBC 1603.1.5)

RISK CATEGORY:	I
IMPORTANCE FACTOR:	Ie = 1.00
SITE CLASS:	E
MCE EARTHQUAKE SPECTRAL ACCELERATIONS	
AT SHORT PERIODS:	SMS = 0.909 G
AT A PERIOD OF 1 SECOND:	SM1 = 0.844 G
DESIGN EARTHQUAKE SPECTRAL ACCELERATIONS	
AT SHORT PERIODS:	SDS = 0.606 G
AT A PERIOD OF 1 SECOND:	SD1 = 0.563 G
SEISMIC DESIGN CATEGORY:	SDC = D

   RESPONSE MODIFICATION COEFFICIENT: N/A FOR EARTH RETAINED STRUCT.

   ANALYSIS METHOD: EQUIVALENT LATERAL FORCE

4. LOADS:

   a. PEDESTRIAN: 60 PSF MIN ON ALL ELEVATED SLABS & GRATES

   b. VEHICLE: HS-20 (CAL-TRANS BRIDGE DESIGN SPECIFICATIONS) APPLIES OVER LIFT STATION SLAB

4. EARTH LOADS & CAPACITY:
   (PER KLEINFELDER GEOTECHNICAL REPORT, RIVERSIDE CANAL, DATED 9/24/10)

COMPACTED SOIL GRAVITY LOAD		SOIL BEARING CAPACITY SHALLOW FND:	
SATURATED	= 120 PCF	GENERAL	= 1000 PSF
		PIPE CROSSING	= 1800 PSF
LEVEL SOIL LATERAL LOADS:			
ACTIVE DRAINED	= 45 PCF	PASSIVE PRESSURE:	
ACTIVE SUBMERGED	= 85 PCF	DRAINED	= 320 PCF
AT REST DRAINED	= 65 PCF	SUBMERGED	= 150 PCF
AT REST SUBMERGED	= 95 PCF		

   FRICTION RESISTANCE:
   f=0.30 CANAL EMBANKMENT OR CHANNEL LINING FILL
   f=0.40 ENGINEERED FILL

STEEL BAR GRATING NOTES:

GT-1 STEEL BAR GRATING SHALL BE 1-1/2" X 1/8" BAR GRATING WITH BEARING BARS AT 1-3/16" OC UNLESS NOTED OTHERWISE ON THE PLANS. SEE SECTION 05 50 13 OF THE PROJECT SPECIFICATIONS.

GT-2. UNLESS NOTED OTHERWISE, ATTACH GRATING TO EACH SUPPORT WITH SADDLE CLIP AND 1/4" DIA FASTENER. MINIMUM 4 CONNECTIONS PER PANEL, ONE AT EACH SUPPORT.

GT-3. GRATING AND ASSOCIATED HARDWARE SHALL BE OF SAME MATERIAL.

GT-4. REMOVABLE OR HINGED SECTIONS OF GRATING SHALL BE LOCKABLE. COORDINATE WITH CONTRACTING OFFICER.

GT-5. GRATING SHALL BE BANDED AT ALL OPENINGS AND EDGES.

EARTHWORK NOTES:

EW-1. SEE THE DESIGN DOCUMENTATION REPORT FOR THE GEOTECHNICAL REPORT. COMPLY WITH SECTION 31 00 00 OF PROJECT SPECIFICATIONS.

EW-2. UNLESS DIRECTED OTHERWISE BY THE CONTRACTING OFFICER, THE CONTRACTOR SHALL RETAIN AN INDEPENDENT, QUALIFIED GEOTECHNICAL ENGINEERING FIRM/TESTING FIRM TO IDENTIFY AREAS OF POOR SOILS, TO MONITOR PROPER SUBGRADE PREPARATIONS AND TO OVERSEE AND TEST THE PLACEMENT OF COMPACTED FILL MATERIAL.

EW-3. ALL SUBTERRANEAN STRUCTURES, UTILITIES, PIPING, ETC. IN THE AREA OF EXCAVATIONS TO BE LOCATED AND MARKED BY CONTRACTOR PRIOR TO EARTH REMOVAL WORK. CONTRACTOR TO MAINTAIN MARKERS UNTIL EXCAVATION ACTIVITIES HAVE CEASED. IF UNDERGROUND UTILITY CONFLICTS ARE DISCOVERED BEFORE OR ENCOUNTERED DURING EXCAVATION, NOTIFY THE CONTRACTING OFFICER IMMEDIATELY.

EW-4 BEFORE PLACING FOOTINGS, FOUNDATIONS OR SLAB-ON-GRADE, THE SUB-GRADE SHALL BE PREPARED AND INSPECTED AS REQUIRED BY THE SPECIFICATIONS.

EW-5. FOOTING SUBGRADES SHALL BE CLEAN AND FREE OF DEBRIS, STANDING WATER, AND LOOSE SOIL. NO FILL SHALL BE PLACED OVER FROZEN, MUDDY, OR OTHER DELETERIOUS MATERIAL. NO FILL SHALL BE PLACED OVER A PREVIOUS LIFT THAT HAS NOT BEEN ADEQUATELY COMPACTED PER SPECIFICATIONS.

EW-6. BACKFILL AGAINST FOUNDATION WALLS SHALL BE PLACED EVENLY ON ALL SIDES IN ORDER TO ACHIEVE GENERALLY BALANCED LOADINGS.

EW-7. RETAINING WALLS AND BELOW GRADE WALLS SHALL BE SHORED DURING EXTERIOR SOIL COMPACTION.

EW-8. UNLESS OTHERWISE DIRECTED BY THE GEOTECHNICAL ENGINEER OVER EXCAVATE TO A DEPTH 1'-6" BELOW THE BOTTOM OF FOOTINGS, SLABS-ON-GRADE AND OTHER STRUCTURES. OVER EXCAVATION SHALL EXTEND 3'-0" HORIZONTALLY FROM EDGE OF FOOTING, SLABS-ON-GRADE AND OTHER STRUCTURES, EACH WAY. BEFORE PLACING FOOTINGS, FOUNDATIONS, SLABS-ON-GRADE OR OTHER STRUCTURES, THE SUB-GRADE SHALL BE PREPARED AND INSPECTED AS REQUIRED BY THE PROJECT SPECIFICATIONS. SEE DETAIL 1/S-501.

EW-9. STRUCTURE BACKFILL SHALL MEET THE REQUIREMENTS OF THE PROJECT SPECIFICATIONS.

STRUCTURAL STEEL NOTES:

MATERIAL PROPERTIES (UN0)

W-SHAPES	Fy = 50 KSI (A992 OR A572 Gr 50)
C-SHAPES & ANGLES	Fy = 36 KSI (A36)
PLATES & BARS	Fy = 36 KSI (A36)
SQUARE TUBES	Fy = 46 KSI (A500 Gr B)
ROUND TUBES	Fy = 35 KSI (A53 TYPE S, Gr B)
ANCHOR RODS `	Fy = 36 KSI (F1554)

S-1. UNO, ALL BOLTED CONNECTIONS SHALL UTILIZE 3/4 INCH DIAMETER A325-X BOLTS TIGHTENED TO THE SNUG-TIGHT CONDITION. THE SNUG-TIGHT CONDITION IS DEFINED BY THE RCSC'S "SPECIFICATION FOR STRUCTURAL JOINTS USING ASTM A325 OR A490 BOLTS".

S-2. NON-SHRINK GROUT SHALL BE PER SPECIFICATION 03 30 00.

S-3. ALL WELDING OF NEW STEEL IS TO BE WITH E70XX ELECTRODES, UNO WELDING SHALL BE IN ACCORDANCE WITH THE LATEST AWS D1.1 SPECIFICATIONS BY CERTIFIED WELDERS.

S-4. ALL STEEL SHALL BE HOT-DIPPED GALVANIZED AFTER FABRICATION. FASTENERS SHALL BE HOT-DIPPED GALVANIZED. FIELD BORING, CUTTING OR WELDING ARE NOT ALLOWED UNLESS SPECIFICALLY DETAILED AND APPROVED TOUCH UP IS PROVIDED.

S-5 REFER TO S-002 FOR STRUCTURAL STEEL TESTING AND INSPECTION REQUIREMENTS.

SHOP DRAWINGS:

SD-1. SHOP DRAWINGS REQUIRED BY THE GENERAL NOTES AND/OR SPECIFICATIONS SHALL BE SUBMITTED TO THE CONTRACTING OFFICER FOR REVIEW PRIOR TO FABRICATION. CONSTRUCTION DOCUMENTS SHALL NOT BE REPRODUCED FOR USE AS SHOP DRAWINGS.

SD-2. THE GENERAL CONTRACTOR SHALL REVIEW ALL SHOP DRAWINGS AND PRODUCT DATA FOR CONFORMANCE WITH THE CONSTRUCTION DOCUMENTS PRIOR TO SUBMITTAL. GENERAL CONTRACTOR SHALL CLOUD OR FLAG ALL ITEMS NOT IN ACCORDANCE WITH THE CONTRACT DOCUMENTS AND SHALL VERIFY ALL DIMENSIONS.

SD-3. ANY CHANGES OR DEVIATIONS FROM THE ORIGINAL CONTRACT DRAWINGS SHALL BE CLOUDED BY THE MANUFACTURER OR FABRICATOR. ANY CHANGES OR DEVIATIONS WHICH ARE CLOUDED OR FLAGGED BY SUBMITTING PARTIES SHALL NOT BE CONSIDERED APPROVED AFTER THE CONTRACTING OFFICER'S REVIEW, UNLESS SPECIFICALLY NOTED ACCORDINGLY BY THE CONTRACTING OFFICER.

SD-4. SHOP DRAWING REVIEW IS INTENDED ONLY FOR GENERAL CONFORMANCE TO THE DESIGN INTENT AND CONSTRUCTION DOCUMENTS.

CONCRETE & REINFORCING STEEL NOTES:

MATERIAL PROPERTIES (UNO)

COMPRESSIVE STRENGTH - F'c = 4000 PSI

CONCRETE REINFORCEMENT - Fy = 60 KSI (ASTM A615 GR 60)

CR-1. COMPLY WITH SECTION 03 30 00 OF PROJECT SPECIFICATIONS.

CR-2. LAP LENGTH SHALL BE SPECIFICALLY NOTED ON SHOP DRAWINGS WHERE MORE THAN ONE BAR MAKES UP A CONTINUOUS STRING.

CR-3. HORIZONTAL BARS SHALL BE DETAILED TO SHOW THE DISTANCE FROM AT LEAST ONE END OF THE BAR TO THE NEAREST FACE OF WALL.

CR-4. REINFORCING SHALL BE DETAILED IN ACCORDANCE WITH THE LATEST VERSION OF ACI 315.

CR-5. ALL REINFORCEMENT BARS SHALL BE FABRICATED IN ACCORDANCE WITH THE LATEST CRSI MANUAL OF STANDARD PRACTICE AND SHALL BE CLEAN AND FREE OF GREASE AND SCALING RUST.

CR-6. PROVIDE WATER STOPS IN ALL HORIZONTAL AND VERTICAL CONSTRUCTION JOINTS UNLESS OMISSION IS SPECIFICALLY APPROVED BY THE CONTRACTING OFFICER AT EACH LOCATION.

CR-7. HOOK HORIZONTAL WALL AND BEAM REINFORCING BARS AT DISCONTINUOUS ENDS, TYPICAL UNO EXTEND REINFORCEMENT TO FAR FACE OF PIERS/PEDESTALS AND/OR COLUMNS UNO

CR-8. PROVIDE HOT/COLD WEATHER PROCEDURES AND PROTECTION IN ACCORDANCE WITH ACI RECOMMENDATIONS AND PROJECT SPECIFICATIONS.

CR-9. CONCRETE REINFORCEMENT PROTECTION/CLEAR COVER, UNO (IN ACCORDANCE WITH ACI-350):

BOTTOM & SIDES CAST AGAINST EARTH	3"
FORMED SIDES AND TOP	2"

CR-10. PROVIDE ADDITIONAL #5 TRIM BARS AT 4'-0" LONG 3" AWAY FROM CORNER AT 45° TO ALL REENTRANT CORNERS AND OPENINGS IN CONCRETE SLABS AND WALLS FOR EACH LAYER OF REINF. UNO.

CR-11. ALL CONCRETE DESIGN AND CONSTRUCTION SHALL CONFORM WITH THE 2016 CALIFORNIA BUILDING CODE REQUIREMENTS AND THOSE OF THE FOLLOWING STANDARDS (LATEST EDITION):

"ACI 318, BUILDING CODE REQUIREMENTS FOR REINFORCED CONC."
"ACI 315, DETAILS AND DETAILING OF CONCRETE REINFORCEMENT"
"ACI 350, CODE REQUIREMENTS FOR ENVIRONMENTAL ENGINEERING CONCRETE STRUCTURES."
"ACI 307, RECOMMENDED PRACTICE FOR CONCRETE FORM WORK"

CR-12. ALUMINUM CONDUIT IS NOT PERMITTED TO BE EMBEDDED IN CONCRETE.

CR-13. UNO, PROVIDE FOOTING DOWELS TO MATCH VERTICAL WALL REINFORCING.

CR-14. UNO, CONTRACTOR SHALL SUBMIT PLANS OF JOINT LOCATIONS TO THE CONTRACTING OFFICER FOR APPROVAL PRIOR TO CASTING FOR STRUCTURES LONGER THAN 40 FT.

CR-15. PROVIDE A 3/4" CHAMFER ON ALL EXPOSED EDGES.

CR-16. ALL ADHESIVE ANCHORS AND ADHESIVE DOWELS INTO CONCRETE TO BE ANCHORED WITH HILTI RE-500-V3 ADHESIVE OR SIMPSON SET 3G ADHESIVE UNLESS INDICATED OTHERWISE.

STRUCTURAL OBSERVATION NOTES:

SO-1 STRUCTURAL OBSERVATION IS REQUIRED FOR ALL STRUCTURES SHOWN IN DRAWINGS. PROVIDE ACCESS AND SCHEDULE ALLOWANCES FOR STRUCTURAL OBSERVATION, COORDINATE ACCESS AND SCHEDULE WITH THE CONTRACTING OFFICER.

SO-2 COORDINATE WITH CONTRACTING OFFICER THE NECESSARY HOLD POINTS FOR STRUCTURAL OBSERVATION AT A PRECONSTRUCTION MEETING. MINIMUM HOLD POINTS ARE LISTED BELOW FOR EACH STRUCTURE:
- FOUNDATION PRIOR TO CONCRETE PLACEMENT
- CONCRETE WALLS AND SLAB PRIOR TO CONCRETE PLACEMENT
- STEEL ERECTION IN PROGRESS
- FINAL STRUCTURE

STRUCTURAL TESTING AND INSPECTION:

TI-1. AN INDEPENDENT TESTING AND INSPECTION FIRM SHALL BE RETAINED TO PROVIDE SPECIFIED FIELD AND LAB TESTING OF CONSTRUCTION MATERIALS AND TO PROVIDE SPECIFIED CONSTRUCTION INSPECTIONS. THE CONSTRUCTION INSPECTION SHALL BE DONE BY INSPECTORS WHOSE QUALIFICATIONS ARE SATISFACTORY TO THE CONTRACTING OFFICER.

TI-2. THE CONTRACTOR SHALL PROVIDE THE CONTRACTING OFFICER AND THE INDEPENDENT TESTING AND INSPECTION FIRM ACCESS TO ALL PLACES WHERE THE WORK IS BEING PERFORMED. A MINIMUM OF 24 HOURS NOTIFICATION SHALL BE GIVEN TO THE TESTING AND INSPECTION FIRM PRIOR TO THE COMMENCEMENT OF WORK REQUIRING TESTING OR INSPECTION.

TI-3. THE INDEPENDENT TESTING AND INSPECTION FIRM SHALL INSPECT FOR CONFORMANCE TO SPECIFIED REQUIREMENTS FOR PROTECTING NEW CONCRETE FROM THE ADVERSE EFFECTS OF WEATHER, HEATING EQUIPMENT AND OTHER POTENTIALLY HARMFUL CONDITIONS.

TI-4. THE INDEPENDENT TESTING AND INSPECTION FIRM IS NOT AUTHORIZED TO DIRECT OR APPROVE ANY CHANGES FROM THE CONTRACT DOCUMENTS. IF THE CONTRACTOR WISHES TO QUESTION THE TESTING AND INSPECTION FIRM'S INTERPRETATION OF THE CONTRACT DOCUMENTS, HE MAY DO SO DIRECTLY WITH THE CONTRACTING OFFICER.

TI-5. THE INDEPENDENT TESTING AND INSPECTION FIRM IS NOT AUTHORIZED TO STOP OR DELAY THE WORK. IF THE CONTRACTOR ELECTS TO CONTINUE WITH A CERTAIN PORTION OF WORK AFTER BEING NOTIFIED BY THE TESTING FIRM THAT SUCH WORK IS NOT IN ACCORDANCE WITH THE CONSTRUCTION DOCUMENTS, THE CONTRACTOR DOES SO AT THEIR OWN RISK AND MAY BE REQUIRED TO CORRECT THE WORK AT A LATER DATE.

TI-6. THE INDEPENDENT TESTING AND INSPECTION FIRM FIRM IS NOT INSPECTING FOR CAL-OSHA COMPLIANCE OR REQUIRED TO INSPECT TEMPORARY CONSTRUCTION, SUCH AS TEMPORARY BRACING. TEMPORARY CONSTRUCTION IS THE CONTRACTOR'S SOLE RESPONSIBILITY.

TI-7. THE THESE NOTES AND THE PROJECT SPECIFICATIONS TYPICALLY INDICATE THE FREQUENCY OF CONSTRUCTION TESTING AND INSPECTIONS. WHERE THE FREQUENCY IS NOT INDICATED, THE INDEPENDENT TESTING AND INSPECTION FIRM SHALL SUBMIT A PROPOSAL OF INSPECTION INTERVALS TO THE CONTRACTING OFFICER.

TI-8. THE INDEPENDENT TESTING AND INSPECTION FIRM SHALL ISSUE ON GOING REPORTS OF INSPECTIONS AND TESTS TO THE CONTRACTOR AND CONTRACTING OFFICER. ALL DISCREPANCIES SHALL BE BROUGHT TO THE IMMEDIATE ATTENTION OF THE CONTRACTOR FOR CORRECTION, THEN IF UNCORRECTED, TO THE CONTRACTING OFFICER.THE INDEPENDENT TESTING AND INSPECTION FIRM SHALL PREPARE AND SUBMIT A FINAL REPORT TO THE CONTRACTING OFFICER DOCUMENTING REQUIRED SPECIAL INSPECTIONS AND CORRECTION OF ANY DISCREPANCIES NOTED IN THE INSPECTIONS.

TI-9. SPECIAL INSPECTION AND TESTING DOES NOT REPLACE CODE-REQUIRED INSPECTIONS OR STRUCTURAL OBSERVATIONS.

TI-10. IT IS THE CONTRACTOR'S RESPONSIBILITY TO INSPECT ALL STRUCTURAL WORK FOR CONFORMANCE WITH THE CONTRACT DOCUMENTS. ANY INSPECTION PROVIDED BY OTHERS DOES NOT RELIEVE THE CONTRACTOR OF THIS RESPONSIBILITY. ANY DEVIATIONS FROM THE CONTRACT DOCUMENTS THAT ARE FOUND AT A LATER DATE AND ARE DECLARED TO BE SIGNIFICANT BY THE CONTRACTING OFFICER SHALL BE CORRECTED BY THE CONTRACTOR WITHOUT COST OR ANY DELAY TO THE PROJECT SCHEDULE.

TI-11. STRUCTURAL STEEL: THE CONTRACTOR AND SUBCONTRACTOR(S) RESPONSIBLE FOR ERECTION AND FABRICATION SHALL BE RESPONSIBLE FOR QUALITY CONTROL INSPECTORS (QCI) IN ACCORDANCE WITH AISC 360. REFER TO STRUCTURAL STEEL TESTING AND INSPECTION NOTES.

TI-12. STRUCTURAL SPECIAL INSPECTION AND TESTING BY THE INDEPENDENT TESTING AND INSPECTION FIRM SHALL BE IN ACCORDANCE WITH THE SPECIFICATIONS AND INCLUDE THE SCOPE LISTED IN TABLE 1 ON S-002.

TI-13. REFER TO STRUCTURAL STEEL SPECIAL INSPECTION NOTES ON S-002 FOR STRUCTURAL STEEL AND STEEL ELEMENTS SIMILAR TO STRUCTURAL STEEL.

ABBREVIATIONS

AISC	AMERICAN INSTITUTE OF STEEL CONSTRUCTION
CAL-OSHA	CALIFORNIA OCCUPATIONAL SAFETY AND HEALTH ADMINISTRATION
CL	CENTER LINE
CLR	CLEAR
CONC	CONCRETE
DEG	DEGREE
DIA	DIAMETER
EA	EACH
EF	EACH FACE
EL	ELEVATION
EQ	EQUAL
EW	EACH WAY
FL	FLOOR
GA	GAUGE
GALV	GALVANIZED
HDG	HOT-DIPPED GALVANIZED
HORIZ	HORIZONTAL
L	LENGTH
LLH	LONG LEG HORIZONTAL
LLV	LONG LEG VERTICAL
MAX	MAXIMUM
MIN	MINIMUM
OC	ON CENTER
OH	OPPOSITE HAND
PL	PLATE
REINF	REINFORCEMENT
STD	STANDARD
TYP	TYPICAL
UNO	UNLESS NOTED OTHERWISE
VERT	VERTICAL
W/	WITH
WF	WIDE FLANGE
WP	WORKING POINT
WWF	WELDED WIRE FABRIC

US Army Corps of Engineers®

MARK	DESCRIPTION	DATE

ISSUE DATE: 05/09/2019
SOLICITATION NO.:
CONTRACT NO.:
FILE NO: 1-04-0642
FILE NAME: S-001.dwg
DESIGNED BY: F. BRADY
DRAWN BY: E. DIOCSON
CHECKED BY: S. SULLIVAN
SUBMITTED BY: J. KASHIWADA
SIZE: ANSI D
SPEC NO: 2122

U.S. ARMY CORPS OF ENGINEERS
SACRAMENTO DISTRICT

MEAD & HUNT, INC.
180 PROMENADE CIRCLE, SUITE 240
SACRAMENTO, CA 95834

AMERICAN RIVER COMMON FEATURES
NATOMAS BASIN REACH B
RIVERSIDE CANAL PHASE 2 RELOCATION PROJECT

STRUCTURAL NOTES AND ABBREVIATIONS

SHEET ID
S-001

X:\1941500\161390.01\TECH\CAD\Riverside Canal\S-001.dwg

FINAL ISSUE FOR BID

TABLE 1: SPECIAL INSPECTION AND TESTING

SOILS	SPECIAL CONTIN-UOUS	SPECIAL PERI-ODIC	TESTING (SEE SPECS)	COMMENTS	CODE / STANDARD REF. (CBC 2016 UNO)
VERIFICATION THAT OVER-EXCAVATION EXTENDS TO PROPER DEPTH, HAS REACHED PROPER MATERIAL, AND HAS EXTENDED TO PROPER HORIZONTAL EXTENTS		X	X	BY PROJECT GEOTECHNICAL ENGINEER	TABLE 1705.6 (2)
PRIOR TO PLACEMENT OF COMPACTED FILL, OBSERVATION OF SUBGRADE AT BOTTOM OF OVER-EXCAVATION, AND VERIFY THAT SITE HAS BEEN PREPARED PROPERLY		X	X	BY PROJECT GEOTECHNICAL ENGINEER	TABLE 1705.6 (5)
CLASSIFICATION AND TESTING OF COMPACTED FILL MATERIALS		X	X	BY PROJECT GEOTECHNICAL ENGINEER	TABLE 1705.6 (3)
DURING PLACEMENT AND COMPACTION OF COMPACTED FILL, VERIFICATION OF USE OF PROPER MATERIALS, DENSITIES AND LIFT THICKNESSES	X		X	BY PROJECT GEOTECHNICAL ENGINEER	TABLE 1705.6 (4)
VERIFICATION OF MATERIALS BELOW FOOTINGS ARE ADEQUATE TO ACHIEVE THE DESIGN BEARING CAPACITY		X	X	BY PROJECT GEOTECHNICAL ENGINEER	TABLE 1705.6 (1)
CONCRETE REINFORCEMENT	SPECIAL CONTIN-UOUS	SPECIAL PERI-ODIC	TESTING (SEE SPECS)	COMMENTS	CODE / STANDARD REF. (CBC 2016 UNO)
INSPECTION OF REINFORCING STEEL AND PLACEMENT		X			TABLE 1705.3 (1) / ACI 318: 20, 25.2, 25.3, 26.6.1-26.6.3
CONCRETE	SPECIAL CONTIN-UOUS	SPECIAL PERI-ODIC	TESTING (SEE SPECS)	COMMENTS	CODE / STANDARD REF. (CBC 2016 UNO)
PRE-PLACEMENT INSPECTION OF CAST-IN-PLACE ANCHORS AND EMBEDS		X		COORDINATE WITH STEEL INSPECTION REQUIREMENTS	TABLE 1705.3 (3) / ACI 318: 17.8.2
PRE-PLACEMENT INSPECTION OF FORMWORK FOR SHAPE, LOCATION, DIMENSIONS		X			TABLE 1705.3 (12) / ACI 318: 26.11.1.2(b)
PLACEMENT – VERIFICATION OF REQUIRED DESIGN MIX		X		VERIFY PRIOR TO DEPOSITING. NOTE ADDITIVES (ADMIXTURES, WATER, ETC) ADDED PRIOR TO PLACEMENT	TABLE 1705.3 (5) / ACI 318: CH. 19, 26.4.3, 26.4.4
PLACEMENT -TESTING FOR SLUMP, AIR CONTENT, TEMPERATURE AT TIME WHEN STRENGTH SAMPLES ARE MADE	X		X		TABLE 1705.3 (6) / ASTM C 172, ASTM C 31 / ACI 318: 26.4, 26.12
INSPECTION OF CONCRETE PLACEMENT FOR PROPER APPLICATION / CONSOLIDATION	X				TABLE 1705.3 (7) / ACI 318: 26.5
COMPRESSIVE STRENGTH TESTING			X		ACI 318: 26.12
INSPECTION OF FOR MAINTENANCE OF SPECIFIED CURING TEMPERATURE AND TECHNIQUES		X			TABLE 1705.3 (8) / ACI 318: 26.5.3-26.5.5
VERIFICATION OF PROTECTION FROM THE ADVERSE EFFECTS OF WEATHER, HEATING EQUIPMENT, WELDING AND OTHER POTENTIALLY HARMFUL CONDITIONS.		X			ACI 318, ACI 305, ACI 306
VERIFICATION OF IN-SITU CONCRETE STRENGTH PRIOR TO REMOVAL OF SHORES OR FORMS FROM BEAMS AND STRUCTURAL SLABS.		X		NOT REQUIRED AT FOOTINGS, SLABS ON GRADE OR OTHER GROUND SUPPORTED CONCRETE	TABLE 1705.3 (11) / ACI 318 26.11.2
INSPECT ERECTION OF PRECAST CONCRETE MEMBERS.		X			TABLE 1705.3 (10) / ACI 318 26.8
CONCRETE POST-INSTALLED ANCHORS	SPECIAL CONTIN-UOUS	SPECIAL PERI-ODIC	TESTING (SEE SPECS)	COMMENTS	CODE / STANDARD REF. (CBC 2016 UNO)
INSPECTION OF POST-INSTALLED MECHANICAL ANCHORS; VERIFICATION OF APPROVED RESEARCH REPORT ACI 355.2 PREQUALIFIED		X		INSPECT IN ACCORDANCE WITH APPROVED RESEARCH REPORT	TABLE 1705.3 (4) / ACI 318 17.8.2
INSPECTION OF POST-INSTALLED ADHESIVE ANCHORS (INCLUDING ANCHORS W/ SUSTAINED TENSION AND UPWARDLY INCLINED ANCHORS); VERIFICATION OF INSTALLER CERTIFICATION; VERIFICATION OF APPROVED RESEARCH REPORT ACI 355.4 PREQUALIFIED	X			INSPECT IN ACCORDANCE WITH APPROVED RESEARCH REPORT (CONTINUOUS - DO NOT LOWER INSPECTION FREQUENCY)	TABLE 1705.3 (4) / ACI 318 17.8.2

TABLE NOTES:

A. REFER TO SPECIFICATIONS FOR TESTING REQUIREMENTS AND ADDITIONAL QUALITY ASSURANCE REQUIREMENTS.

TABLE 2: STRUCTURAL STEEL SPECIAL INSPECTION AND TESTING

STRUCTURAL STEEL / STEEL ELEMENT ITEM	INSPECTION QCI	INSPECTION QAI (SIA)	TESTING	COMMENTS	CODE / STANDARD REF. (AISC 360-10 UNO)
FABRICATED STEEL TO VERIFY COMPLIANCE WITH SHOP DRAWINGS	P	O			N5.7
PLACEMENT OF ANCHOR RODS AND OTHER EMBEDMENTS SUPPORTING STRUCTURAL STEEL, FOR COMPLIANCE WITH THE CONSTRUCTION DOCUMENTS (DIAMETER, GRADE, TYPE, LENGTH, EMBEDMENT DEPTH)	O	P			N5.7
INSPECTION OF WELDING PROCEDURE SPECIFICATIONS (WPSs)	P	P			TABLE N5.4-1
MANUFACTURER CERTIFICATIONS FOR WELDING CONSUMABLES	P	P			TABLE N5.4-1
MATERIAL IDENTIFICATION (TYPE/GRADE)	O	O			TABLE N5.4-1
WELDER IDENTIFICATION SYSTEM	O	O		SEE AISC 360 TABLE N5.4-1 FOR MORE INFORMATION	TABLE N5.4-1
GROOVE WELD FIT-UP: JOINT GEOMETRY, JOINT PREPARATION, DIMENSIONS (ALIGNMENT, ROOT OPENING, ROOT FACE, BEVEL), CLEANLINESS (CONDITION OF STEEL SURFACES), TACKING (TACK WELD QUALITY AND LOCATION), BACKING TYPE AND FIT	O	O			TABLE N5.4-1
CONFIGURATION AND FINISH OF ACCESS HOLES	O	O			TABLE N5.4-1
FILLET WELD FIT-UP: DIMENSIONS (ALIGNMENT, GAPS AT ROOT), CLEANLINESS (CONDITION OF STEEL SURFACES), TACKING (TACK WELD QUALITY AND LOCATION)	O	O			TABLE N5.4-1
CHECK WELDING EQUIPMENT	O	-			TABLE N5.4-1
USE OF QUALIFIED WELDERS	O	O			TABLE N5.4-2
CONTROL AND HANDLING OF WELDING AND CONSUMABLES (PACKAGING, EXPOSURE CONTROL)	O	O			TABLE N5.4-2
NO WELDING OVER CRACKED TACK WELDS	O	O			TABLE N5.4-2
ENVIRONMENTAL CONDITIONS (WIND SPEED WITHIN LIMITS, PRECIPITATION AND TEMPERATURE)	O	O			TABLE N5.4-2
WPS FOLLOWED: WELDING EQUIPMENT SETTINGS, TRAVEL SPEED, SELECTED WELDING MATERIALS, SHIELDING GAS (TYPE, FLOW RATE), PREHEAT APPLIED, INTERPASS TEMPERATURE MAINTAINED (MIN./MAX.), PROPER POSITION (F, V, H, OH)	O	O			TABLE N5.4-2
WELDING TECHNIQUES: INTERPASS AND FINAL CLEANING, EACH PASS WITHIN PROFILE LIMITATIONS, EACH PASS MEETS QUALITY REQUIREMENTS	O	O			TABLE N5.4-2
WELDS CLEANED	O	O			TABLE N5.4-3
SIZE, LENGTH AND LOCATION OF WELDS	P	P			TABLE N5.4-3
WELDS MEET VISUAL ACCEPTANCE CRITERIA: CRACK PROHIBITION, WELD/BASE METAL FUSION, CRATER CROSS SECTION, WELD PROFILES, WELD SIZE, UNDERCUT, POROSITY	P	P			TABLE N5.4-3
ARC STRIKES	P	P			TABLE N5.4-3
REPAIR ACTIVITIES	P	P			TABLE N5.4-3
DOCUMENT ACCEPTANCE OR REJECTION OF WELDED JOINT OR MEMBER	P	P			TABLE N5.4-3
MANUFACTURER'S CERTIFICATIONS FOR FASTENER MATERIALS	O	P			TABLE N5.6-1
FASTENERS MARKED IN ACCORDANCE WITH ASTM REQUIREMENTS	O	O			TABLE N5.6-1
PROPER FASTENERS SELECTED FOR THE JOINT DETAIL (GRADE, TYPE, BOLT LENGTH IF THREADS ARE TO BE EXCLUDED FROM THE SHEAR PLANE)	O	O			TABLE N5.6-1
PROPER BOLTING PROCEDURE SELECTED FOR THE JOINT DETAIL	O	O			TABLE N5.6-1
CONNECTING ELEMENTS, INCLUDING THE APPROPRIATE FAYING SURFACE CONDITION AND HOLE PREPARATION, MEET REQUIREMENTS	O	O			TABLE N5.6-1
PROPER STORAGE PROVIDED FOR BOLTS, NUTS, WASHERS AND OTHER FASTENER COMPONENTS	O	O			TABLE N5.6-1
FASTENER ASSEMBLIES, OF SUITABLE CONDITION, PLACED IN ALL HOLES AND WASHERS (IF REQUIRED) ARE POSITIONED AS REQUIRED	O	O			TABLE N5.6-2
JOINT BROUGHT TO THE SNUG-TIGHT CONDITION PRIOR TO THE PRETENSIONING OPERATION	O	O			TABLE N5.6-2
FASTENER COMPONENT NOT TURNED BY THE WRENCH PREVENTED FROM ROTATING	O	O			TABLE N5.6-2
FASTENERS ARE PRETENSIONED IN ACCORDANCE WITH RCSC SPECIFICATION PROGRESSING SYSTEMATICALLY FROM THE MOST RIGID POINT TOWARD THE FREE EDGES	O	O			TABLE N5.6-2
DOCUMENT ACCEPTANCE OR REJECTION OF BOLTED CONNECTIONS	O	O			TABLE N5.6-3

STRUCTURAL STEEL SPECIAL INSPECTION AND TESTING:

SSTI-1. REFER TO "STRUCTURAL TESTING AND INSPECTION" FOR GENERAL SPECIAL INSPECTION AND TESTING REQUIREMENTS.

SSTI-2. STEEL ELEMENTS SIMILAR TO STRUCTURAL STEEL SHALL BE TREATED AS STRUCTURAL STEEL FOR PURPOSES OF SPECIAL INSPECTION AND TESTING. SUCH ITEMS INCLUDE BUT ARE NOT LIMITED TO: BASE PLATES, EMBEDDED STEEL PARTS, MISCELLANEOUS METAL FABRICATIONS, BEARING PLATES, AND WALKWAYS.

SSTI-3. FOR STRUCTURAL STEEL, SPECIAL INSPECTION AND TESTING SHALL INCLUDE SCOPE LISTED IN TABLE 2. GENERALLY, DOCUMENT SCOPE AND CONCLUSIONS OF INSPECTIONS PERFORMED EVEN IF THE TABLE DOES NOT SPECIFICALLY STATE TO DOCUMENT THE ITEM.

TABLE 2 NOTES:

A. DEFINITIONS FOR USE WITH THIS TABLE:

DOCUMENT (D): INSPECTOR TO PREPARE REPORTS INDICATING THAT THE WORK HAS BEEN PERFORMED IN ACCORDANCE WITH THE CONTRACT DOCUMENTS. FOR SHOP FABRICATION, THE REPORT SHALL INDICATE THE PIECE MARK OF THE PIECE INSPECTED. FOR FIELD WORK, THE REPORT SHALL DESCRIBE THE ITEM INSPECTED. NON-COMPLIANT WORK SHALL BE NOTED IN THE INSPECTION REPORT.

OBSERVE (O): OBSERVE THESE ITEMS ON A RANDOM BASIS. OPERATIONS NEED NOT BE DELAYED PENDING THESE INSPECTIONS.

PERFORM (P): PERFORM INSPECTION FOR EACH JOINT OR MEMBER.

QUALITY ASSURANCE INSPECTOR (QAI): THE CONTRACTOR'S INDEPENDENT TESTING AND INSPECTION FIRM (SIA).

QUALITY CONTROL INSPECTOR (QCI): THE FABRICATOR'S QUALITY CONTROL INSPECTOR FOR SHOP FABRICATION OR ERECTOR'S FIELD QUALITY CONTROL INSPECTOR FOR FIELD WORK. QCI SHALL BE PROVIDED BY THE CONTRACTOR SHOULD QCI NOT BE PROVIDED BY FABRICATOR AND ERECTOR

B. REFER TO SPECIFICATIONS FOR TESTING REQUIREMENTS AND ADDITIONAL QUALITY ASSURANCE REQUIREMENTS

C. GUARDRAILS AND HANDRAILS ARE EXEMPT FROM THE REQUIREMENTS OF THIS TABLE

US Army Corps of Engineers®

MARK	DESCRIPTION	DATE

ISSUE DATE: 05/09/2019
SOLICITATION NO.:
CONTRACT NO.:
FILE NO: 1-04-0642
FILE NAME: S-002.dwg
DESIGNED BY: F. BRADY
DRAWN BY: E. DIOCSON
CHECKED BY: S. SULLIVAN
SUBMITTED BY: J. KASHIWADA
SIZE: ANSI D
SPEC NO: 2122

U.S. ARMY CORPS OF ENGINEERS
SACRAMENTO DISTRICT

MEAD & HUNT, INC.
180 PROMENADE CIRCLE, SUITE 240
SACRAMENTO, CA 95834

AMERICAN RIVER COMMON FEATURES
NATOMAS BASIN REACH B
RIVERSIDE CANAL PHASE 2 RELOCATION PROJECT

SPECIAL INSPECTION NOTES

SHEET ID
S-002

X:\1941500\161390.01\TECH\CAD\Riverside Canal\S-002.dwg

FINAL ISSUE FOR BID

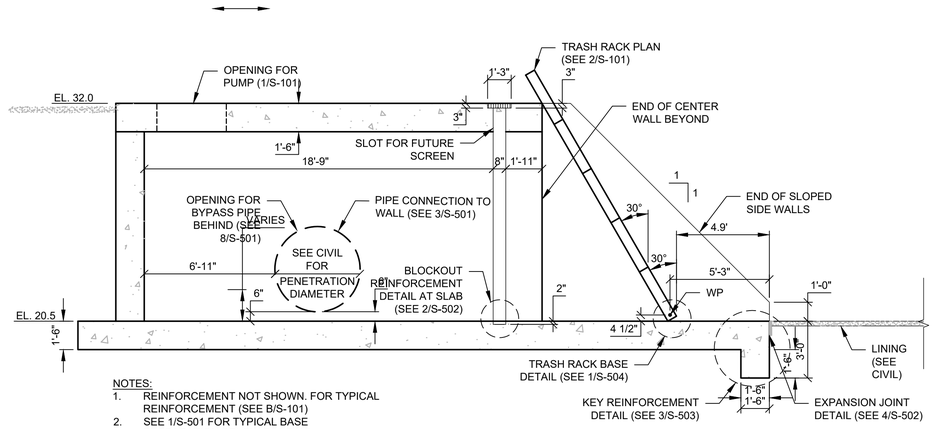

NOTES:
1. REINFORCEMENT NOT SHOWN. FOR TYPICAL REINFORCEMENT (SEE B/S-101)
2. SEE 1/S-501 FOR TYPICAL BASE PREPARATION BELOW FOOTING.

A LIFT STATION STRUCTURAL SECTION
1/4" = 1'-0"

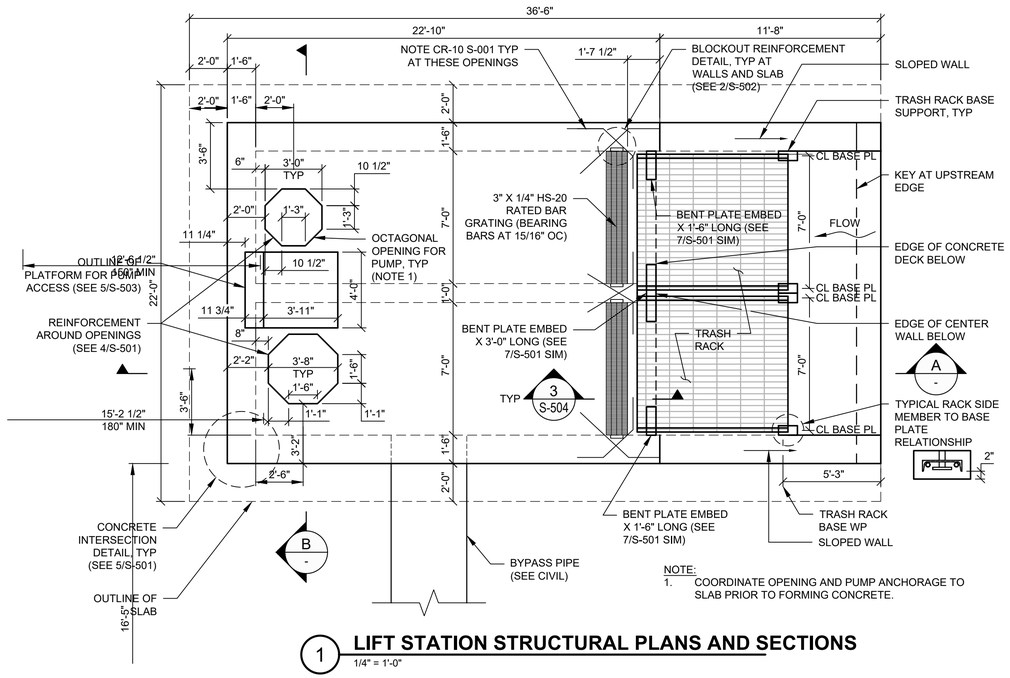

NOTE:
1. COORDINATE OPENING AND PUMP ANCHORAGE TO SLAB PRIOR TO FORMING CONCRETE.

1 LIFT STATION STRUCTURAL PLANS AND SECTIONS
1/4" = 1'-0"

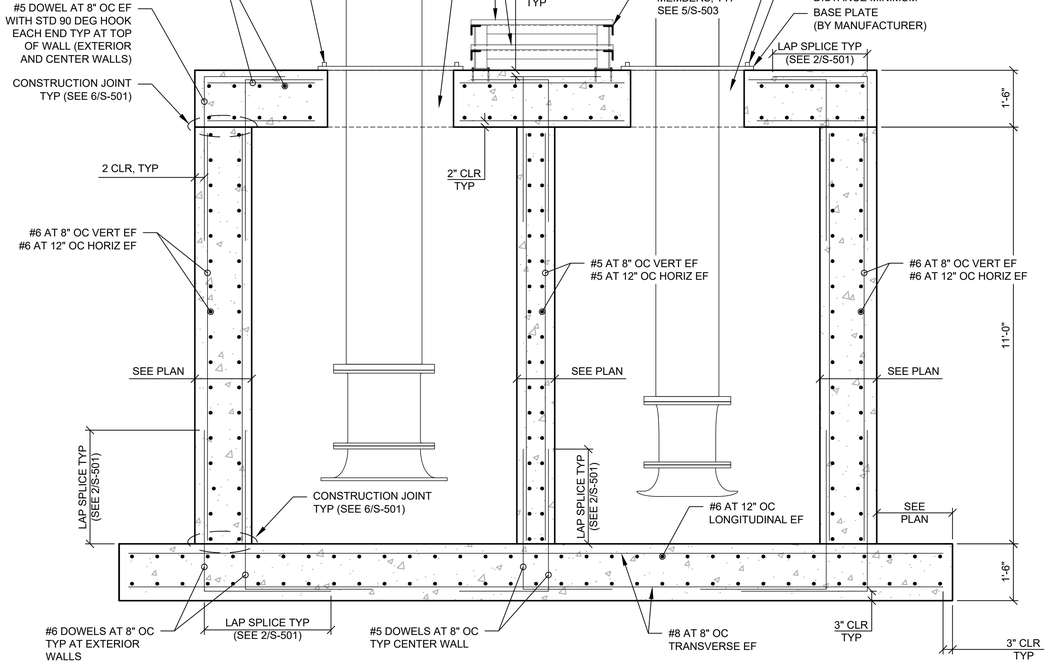

NOTE:
1. SEE 1/S-501 FOR TYPICAL BASE PREPARATION BELOW FOOTING.

B LIFT STATION STRUCTURAL SECTION
1/2" = 1'-0"

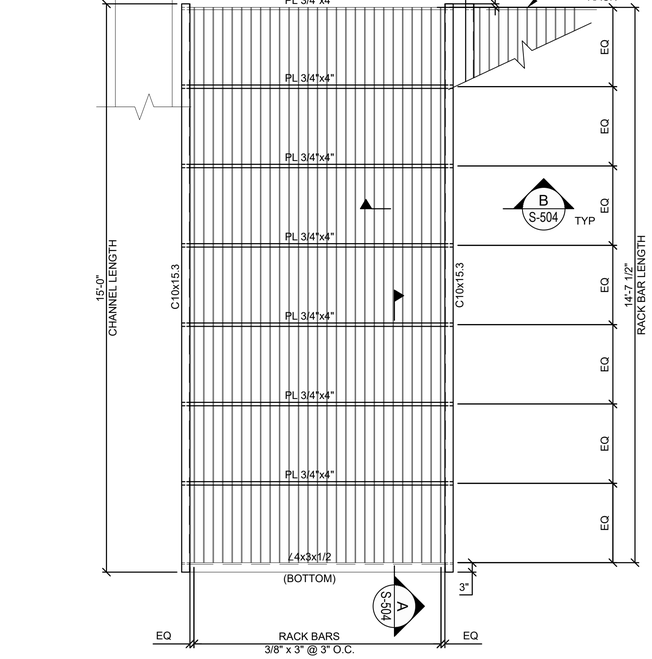

NOTES:
1. ONE PANEL SHOWN, BOTH PANELS ARE IDENTICAL
2. HOT-DIP GALVANIZE ALL STEEL AFTER FABRICATION.

2 TRASH RACK PLAN
1/2" = 1'-0"

US Army Corps of Engineers®

MARK	DESCRIPTION	DATE

ISSUE DATE: 05/06/2019
SOLICITATION NO.:
CONTRACT NO.:
FILE NO: 1-04-0642
FILE NAME: S-101.dwg

DESIGNED BY: C. STEPPER
DRAWN BY: E. DIOCSON
CHECKED BY: S. SULLIVAN
SUBMITTED BY: J. KASHIWADA
SIZE: ANSI D
SPEC NO. 2122

U.S. ARMY CORPS OF ENGINEERS
SACRAMENTO DISTRICT

MEAD & HUNT, INC.
180 PROMENADE CIRCLE, SUITE 240
SACRAMENTO, CA 95834

AMERICAN RIVER COMMON FEATURES
NATOMAS BASIN REACH B
RIVERSIDE CANAL PHASE 2 RELOCATION PROJECT

LIFT STATION STRUCTURAL PLANS AND SECTIONS

SHEET ID
S-101

X:\19415001\161390.01\TECH\CAD\Riverside Canal\S-101.dwg

FINAL ISSUE FOR BID

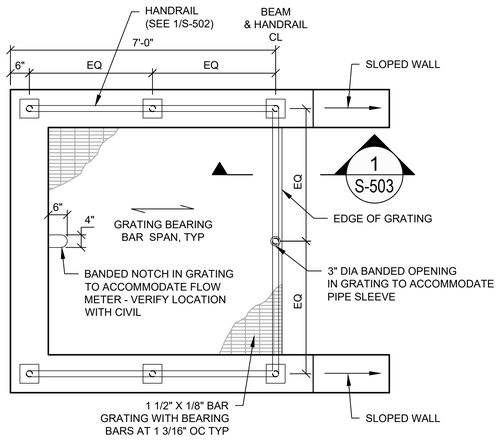

NOTES:
1. STRUCTURAL FRAMING SUPPORT MEMBERS NOT SHOWN (SEE 1/S-102).
2. LOCATE BASE PLATE FOR HANDRAIL AT CENTER OF WALL THICKNESS.
3. BAR GRATING PLANK WITH NOTCH FOR FLOW METER SHALL BE REMOVABLE TO ACCOMMODATE FLOW METER REMOVAL.

3 OUTFALL TOP OF STRUCTURE PLAN
1" = 2'-0"

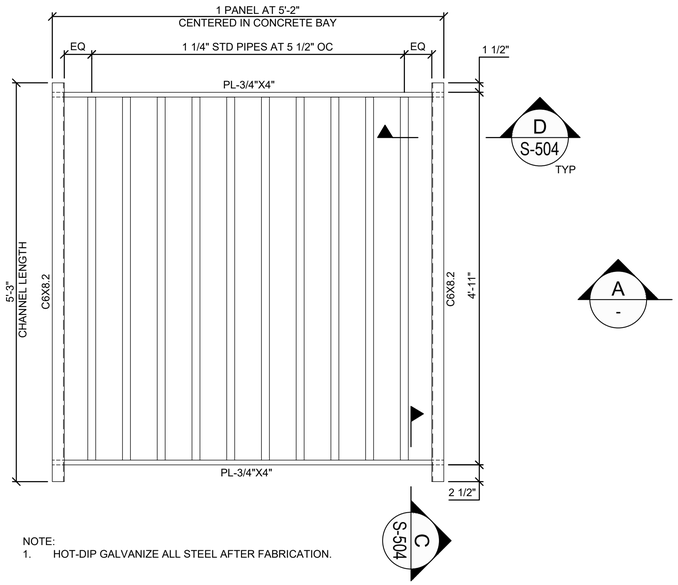

NOTE:
1. HOT-DIP GALVANIZE ALL STEEL AFTER FABRICATION.

2 GRIZZLY PANEL PLAN
1" = 1'-0"

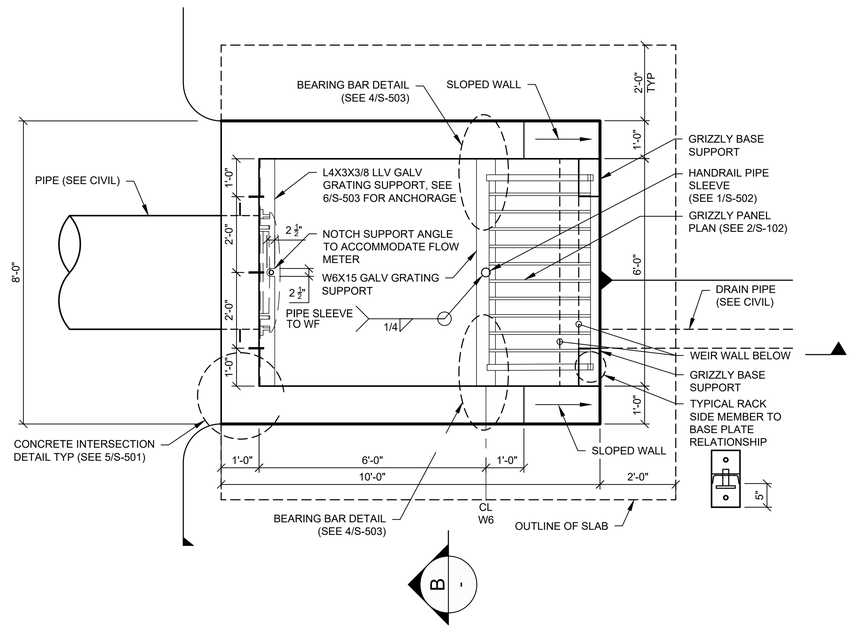

1 OUTFALL PIPE DISCHARGE STRUCTURE PLAN
1" = 2'-0"

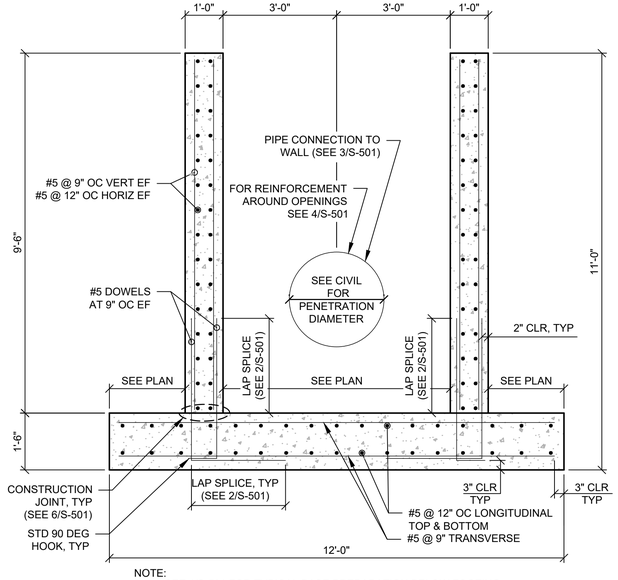

NOTE:
1. SEE 1/S-501 FOR TYPICAL BASE PREPARATION BELOW FOOTING.
2. GRATING AND SUPPORT NOT SHOWN FOR CLARITY.

B OUTFALL PIPE DISCHARGE STRUCTURE SECTION
1" = 2'-0"

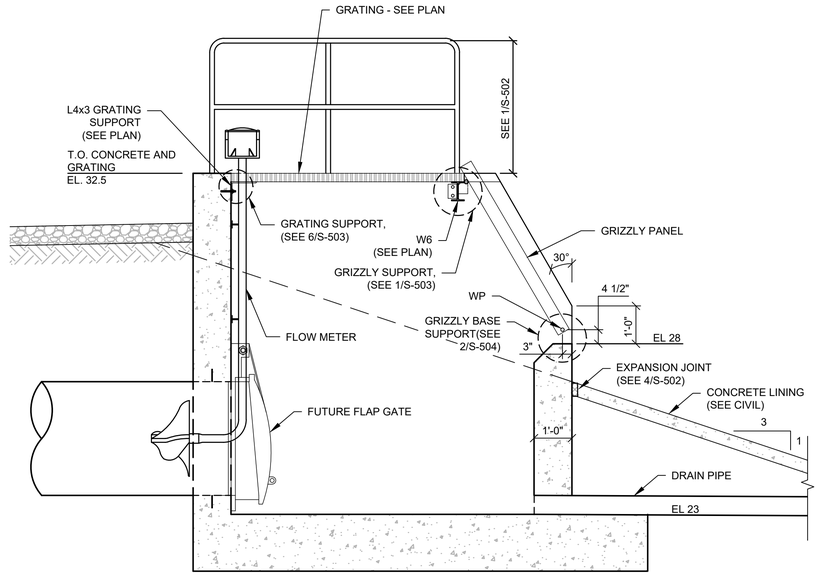

NOTES:
1. REINFORCEMENT NOT SHOWN, FOR TYPICAL REINFORCEMENT SEE B/S-102.
2. SEE 1/S-501 FOR TYPICAL BASE PREPARATION BELOW FOOTING.

A OUTFALL PIPE DISCHARGE STRUCTURE SECTION
1" = 2'-0"

US Army Corps of Engineers®

MARK	DESCRIPTION	DATE

DESIGNED BY:	C. STEPHEN
DRAWN BY:	E. DIOCSON
CHECKED BY:	S. SULLIVAN
SUBMITTED BY:	J. KASHIWADA
SIZE:	ANSI D
ISSUE DATE:	06/06/2019
SOLICITATION NO.:	
CONTRACT NO.:	
FILE NO:	1-04-0642
FILE NAME:	S-102.dwg
SPEC NO:	21ZZ

U.S. ARMY CORPS OF ENGINEERS
SACRAMENTO DISTRICT

MEAD & HUNT, INC.
180 PROMENADE CIRCLE, SUITE 240
SACRAMENTO, CA 95834

AMERICAN RIVER COMMON FEATURES
NATOMAS BASIN REACH B
RIVERSIDE CANAL PHASE 2 RELOCATION PROJECT

PUMPING PLANT OUTFALL
STRUCTURAL PLANS AND SECTIONS

SHEET ID
S-102

X:\19415001\161390.01\TECH\CAD\Riverside Canal\S-102.dwg

FINAL ISSUE FOR BID

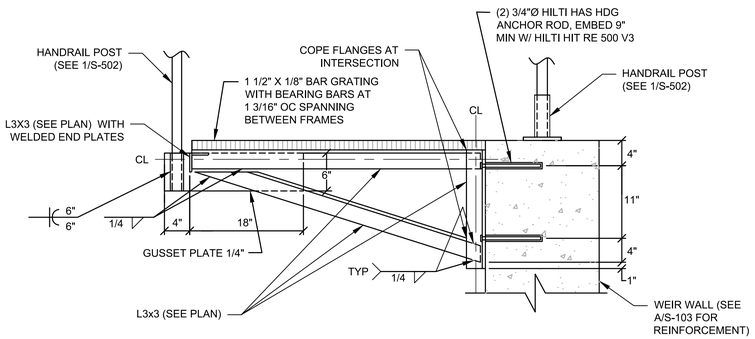

NOTE:
1. HOT-DIP GALVANIZE ALL STEEL AFTER FABRICATION.

B GATE WALKWAY SUPPORT SECTION
1" = 1'-0"

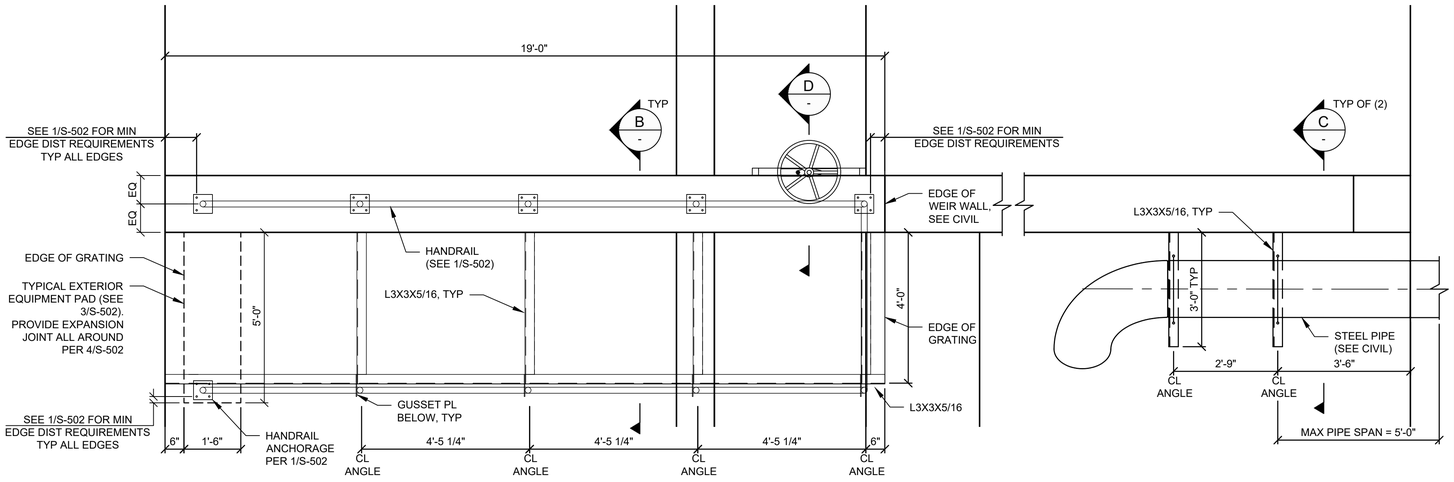

NOTES:
1. GRATING NOT SHOWN (SEE B/S-103 FOR GRATING SIZE AND SPAN DIRECTION).
2. HOT-DIP GALVANIZE ALL STEEL AFTER FABRICATION.
3. SEE C-503 FOR GENERAL ARRANGEMENT AT WEIR.

1 GATE PLATFORM PLAN
1" = 2'-0"

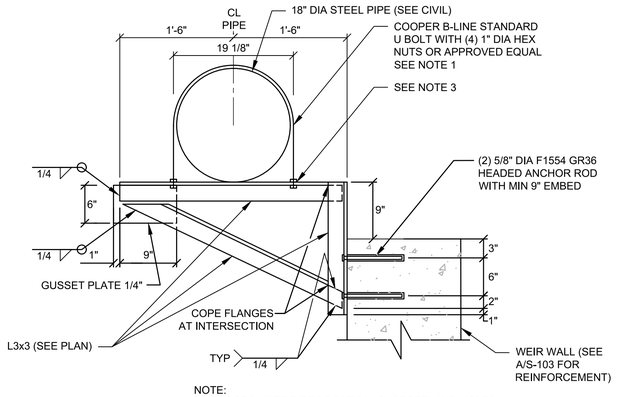

NOTE:
1. COORDINATE PIPE LOCATION, SUPPORT, AND HOLES PRIOR TO SUBMITTING STEEL SHOP DRAWINGS.
2. HOT-DIP GALVANIZE ALL STEEL AFTER FABRICATION.
3. ISOLATE DISSIMILAR METALS.

C PIPE SUPPORT SECTION
1" = 1'-0"

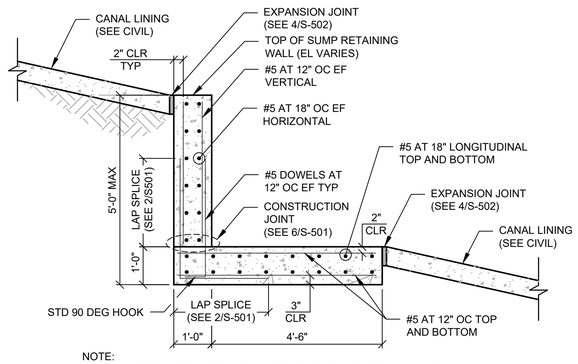

NOTE:
1. SEE 1/S-501 FOR TYPICAL BASE PREPARATION BELOW FOOTING.

E SUMP RETAINING WALL SECTION
1" = 2'-0"

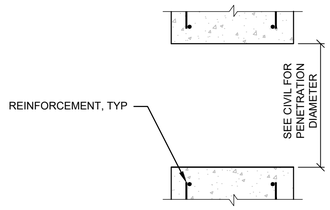

NOTE:
1. COORDINATE WITH GATE MANUFACTURER FOR SEAL REQUIREMENTS.

D PIPE PENETRATION AT WEIR WALL
NTS

NOTE:
1. SEE 1/S-501 FOR TYPICAL BASE PREPARATION BELOW FOOTING.

A CONCRETE RECTANGULAR WEIR SECTION
1" = 2'-0"

US Army Corps of Engineers®

MARK	DESCRIPTION	DATE

ISSUE DATE: 05/06/2019
SOLICITATION NO.:
CONTRACT NO.:
FILE NO: 1-04-0642
FILE NAME: S-103.dwg

DESIGNED BY: C. STEPPER
DRAWN BY: E. DIOCSON
CHECKED BY: S. SULLIVAN
SUBMITTED BY: J. KASHIWADA
SIZE: ANSI D
SPEC NO: FILE 2-22

U.S. ARMY CORPS OF ENGINEERS
SACRAMENTO DISTRICT

MEAD & HUNT, INC.
180 PROMENADE CIRCLE, SUITE 240
SACRAMENTO, CA 95834

AMERICAN RIVER COMMON FEATURES
NATOMAS BASIN REACH B
RIVERSIDE CANAL PHASE 2 RELOCATION PROJECT

WEIR WALL DETAILS

SHEET ID
S-103

X:\1941500\161390.01\TECH\CAD\Riverside Canal\S-103.dwg

FINAL ISSUE FOR BID

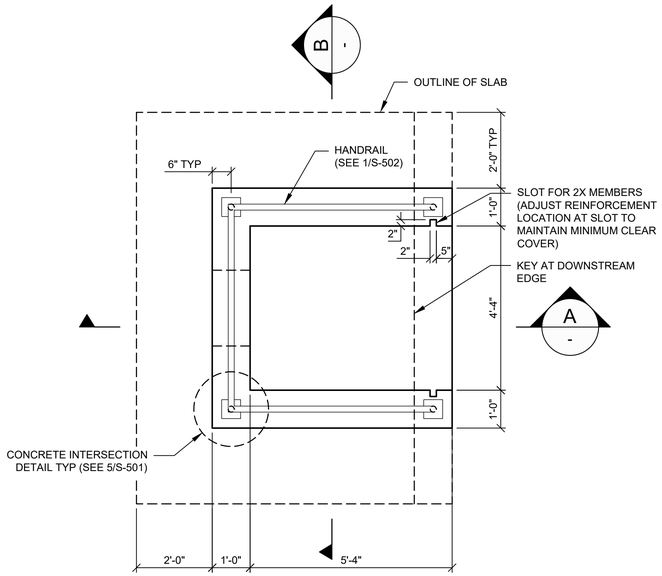

1 DISCHARGE BOX STRUCTURAL PLAN

1" = 2'-0"

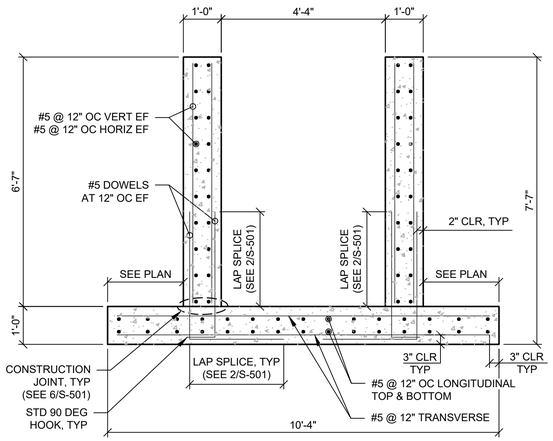

NOTE:
1. SEE 1/S-501 FOR TYPICAL BASE PREPARATION BELOW FOOTING.
2. FOR TYPICAL REINFORCEMENT AT CORNERS SEE DETAIL 5/S-501.

B DISCHARGE BOX SECTION

1" = 2'-0"

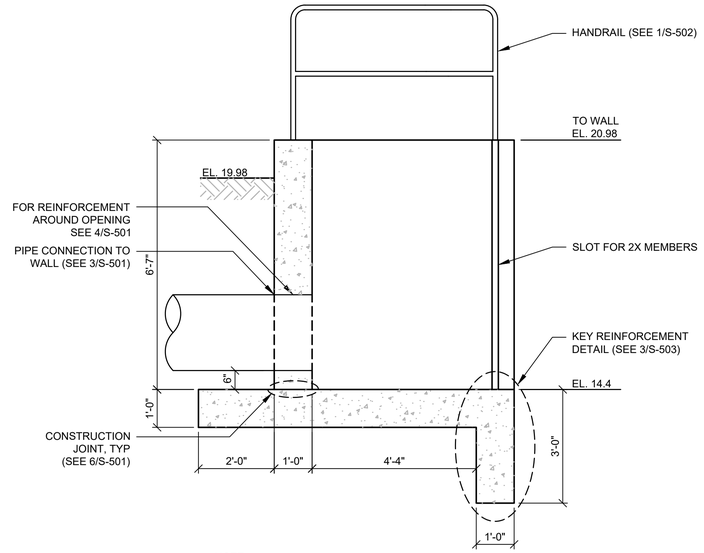

NOTE:
1. SEE 1/S-501 FOR TYPICAL BASE PREPARATION BELOW FOOTING.

A DISCHARGE BOX SECTION

1" = 2'-0"

US Army Corps of Engineers®

MARK	DESCRIPTION	DATE

DESIGNED BY: F. BRADY
DRAWN BY: E. DIOCSON
CHECKED BY: S. SULLIVAN
SUBMITTED BY: J. KASHIWADA
SIZE: ANSI D
SPEC NO: 2122
ISSUE DATE: 05/09/2019
SOLICITATION NO.:
CONTRACT NO.:
FILE NO: 1-04-0642
FILE NAME: S-104.dwg

U.S. ARMY CORPS OF ENGINEERS
SACRAMENTO DISTRICT

MEAD & HUNT, INC.
180 PROMENADE CIRCLE, SUITE 240
SACRAMENTO, CA 95834

AMERICAN RIVER COMMON FEATURES
NATOMAS BASIN REACH B
RIVERSIDE CANAL PHASE 2 RELOCATION PROJECT

DISCHARGE BOX STRUCTURAL PLANS AND SECTIONS

SHEET ID
S-104

X:\1941500\161390.01\TECH\CAD\Riverside Canal\S-104.dwg

FINAL ISSUE FOR BID

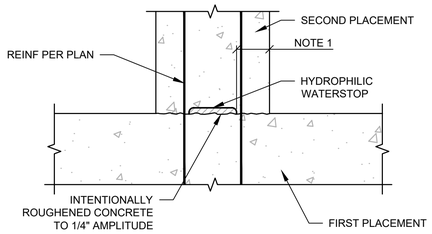

NOTE:
1. PROVIDE CLEARANCE IN ACCORDANCE W/ MANUFACTURER'S INSTRUCTIONS, 3" MIN UNO.

6 TYPICAL CONSTRUCTION JOINT
1 1/2" = 1'-0"

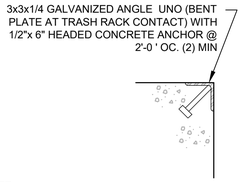

NOTE:
1. HOT-DIP GALVANIZE ALL STEEL AFTER FABRICATION.

7 ANGLE EMBED DETAIL
1 1/2" = 1'-0"

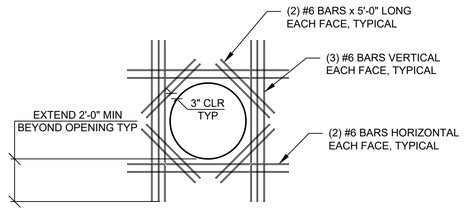

NOTES:
1. VERIFY SIZE AND LOCATION OF OPENINGS WITH TRADE OR SUB-CONTRACTOR REQUIRING OPENINGS.
2. 5'-0" MAXIMUM OPENING UNLESS NOTED OTHERWISE.

8 CONCRETE PENETRATION
NTS

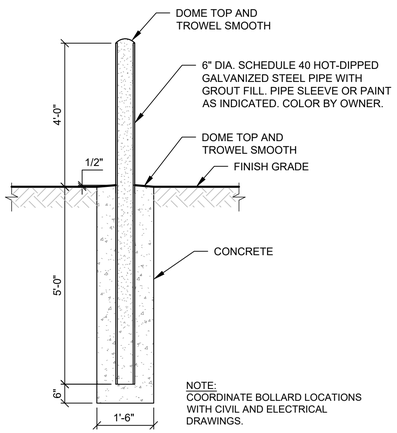

NOTE:
COORDINATE BOLLARD LOCATIONS WITH CIVIL AND ELECTRICAL DRAWINGS.

9 TYPICAL 6" DIAMETER BOLLARD
NTS

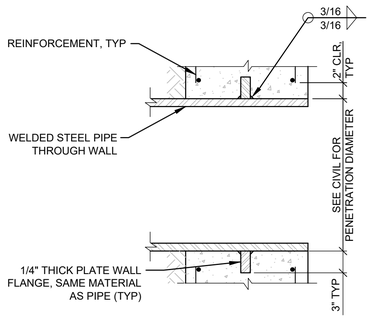

NOTE:
1. HOT-DIP GALVANIZE ALL STEEL AFTER FABRICATION.
2. SEE M-104 FOR PIPE CONNECTION DETAIL AT CONCRETE WALL.

3 TYPICAL STEEL PIPE PENETRATION
NTS

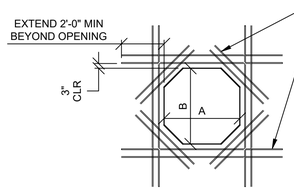

NOTES:
1. APPLIES TO ALL OPENINGS WHERE 'A' OR 'B' IS GREATER THAN OR EQUAL TO CAST IN PLACE CONCRETE THICKNESS.
2. VERIFY SIZE AND LOCATION OF OPENINGS WITH TRADE OR SUB-CONTRACTOR REQUIRING OPENINGS.
3. 4'-0" MAXIMUM OPENING UNLESS NOTED OTHERWISE.

TYPICAL OCTAGONAL OPENING IN CAST IN PLACE CONCRETE

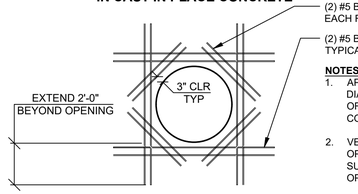

NOTES:
1. APPLIES TO ALL HOLES WHERE DIAMETER IS GREATER THAN OR EQUAL TO CAST IN PLACE CONCRETE THICKNESS.
2. VERIFY SIZE AND LOCATION OF OPENINGS WITH TRADE OR SUB-CONTRACTOR REQUIRING OPENINGS.
3. 2'-0" MAXIMUM OPENING UNLESS NOTED OTHERWISE.

TYPICAL CIRCULAR OPENING IN CAST IN PLACE CONCRETE

4 CONCRETE PENETRATION
NTS

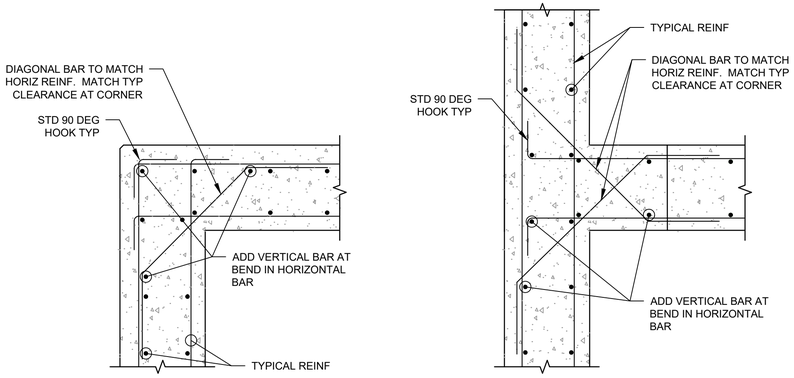

5 TYPICAL CONCRETE INTERSECTION
NTS

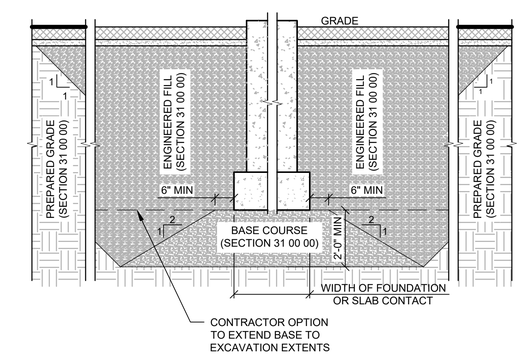

1 TYPICAL OVER-EXCAVATION REQUIREMENTS
NTS

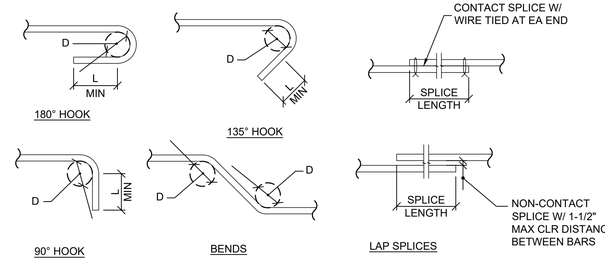

REINFORCING BAR BEND, LAP SPLICE LENGTH AND STANDARD HOOK SCHEDULE

SIZE	MIN PIN DIA	REINF SPLICE LENGTH	MIN 90 HOOK "L"	MIN 180 HOOK "L"
#3	2 1/4"	18"	4 1/2"	2 1/2"
#4	3"	21"	6"	2 1/2"
#5	3 3/4"	25"	7 1/2"	2 1/2"
#6	4 1/2"	27"	9"	3"
#7	5 1/4"	42"	10 1/2"	3 1/2"
#8	6"	53"	12"	4"
#9	9 1/2"	65"	13 1/2"	4 1/2"
#10	10 3/4"	81"	15 1/4"	5 1/4"
#11	12"	93"	17"	5 3/4"

TIE, STIRRUP, HOOP AND CROSSTIE SCHEDULE

SIZE	MIN PIN DIA	MIN 90° HOOK "L"	MIN 135° HOOK "L"	LAP SPLICE LENGTH
#3	1 1/2"	3"	3"	USE TYP REINF SCHEDULE
#4	2"	3"	3"	
#5	2 1/2"	3 3/4"	3 3/4"	

NOTES:
1. THIS DETAIL SHALL BE USED WHERE REBAR SPLICE LENGTHS AND DEVELOPMENTS ARE NOT SPECIFICALLY DETAILED/DIMENSIONED IN THE DRAWINGS.
2. SCHEDULE IS BASED ON ACI 318. LAP SPLICE LENGTHS GIVEN ARE APPLICABLE FOR NORMAL WEIGHT CONCRETE WITH A MINIMUM STRENGTH (f'c) OF 4000 PSI. FOR LIGHTWEIGHT AGGREGATE CONCRETE, MULTIPLY TABLE VALUES BY 1.3.
3. WHERE BARS OF DIFFERENT SIZE ARE LAP SPLICED, SPLICE LENGTH SHALL BE THE SPLICE LENGTH OF LARGER BAR.

2 TYPICAL BAR BENDS, HOOKS AND SPLICES
NTS

US Army Corps of Engineers®

MARK	DESCRIPTION	DATE

ISSUE DATE: 05/06/2010
SOLICITATION NO.:
CONTRACT NO.:

DESIGNED BY: D. STEPHER
DRAWN BY: E. DIOCSON
CHECKED BY: S. SULLIVAN
SUBMITTED BY: J. KASHIWADA
SIZE: ANSI D
SPEC NO: 2722
FILE NO: 1-04-0642
FILE NAME: S-501.dwg

U.S. ARMY CORPS OF ENGINEERS
SACRAMENTO DISTRICT

MEAD & HUNT, INC.
180 PROMENADE CIRCLE, SUITE 240
SACRAMENTO, CA 95834

AMERICAN RIVER COMMON FEATURES
NATOMAS BASIN REACH B
RIVERSIDE CANAL PHASE 2 RELOCATION PROJECT

TYPICAL STRUCTURAL DETAILS

SHEET ID
S-501

X:\19941500\161390.01\TECH\CAD\Riverside Canal\S-501.dwg

FINAL ISSUE FOR BID

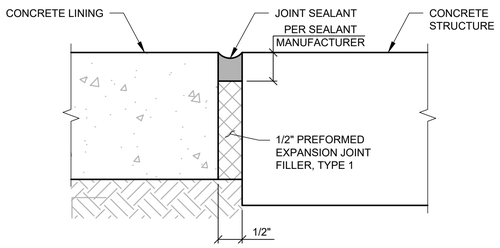

4 EXPANSION JOINT DETAIL
NOT TO SCALE

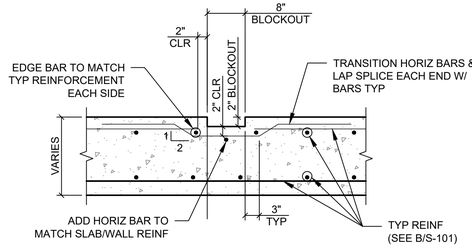

NOTE:
1. OCCURS AT SLAB AND WALLS. SEE 3/S-504 FOR DECK CONDITION.

2 BLOCKOUT REINFORCEMENT DETAIL
3/4" = 1'-0"

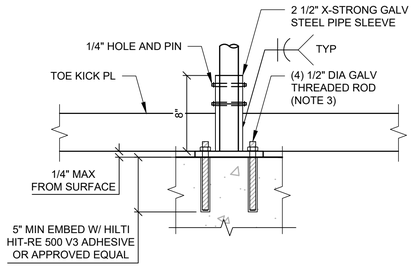

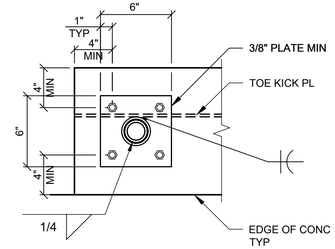

CONCRETE TOP MOUNT

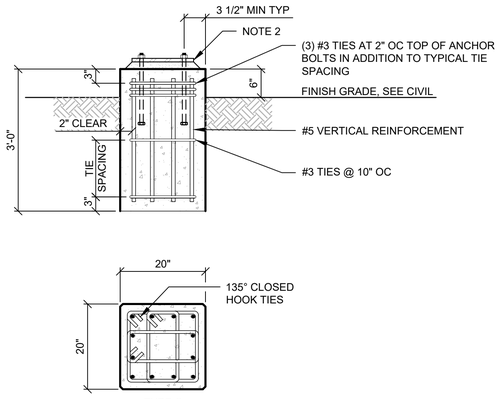

NOTES:
1. THIS DETAIL IS LIMITED FOR USE FOR A PIPE SUPPORT WITH MAXIMUM WEIGHT OF 5000# AND MAXIMUM BASE PLATE DIMENSIONS OF 16"X16".
2. REFER TO 7/M-104 FOR BASE PLATE AND ANCHORAGE REQUIREMENTS. ANCHORS SHALL BE CONFINED INSIDE TIES.
3. SEE 1/S-501 FOR TYPICAL BASE PREPARATION BELOW FOOTING.
4. SEE C-501 FOR PIER LOCATIONS.

5 TYPICAL PIER DETAIL
NTS

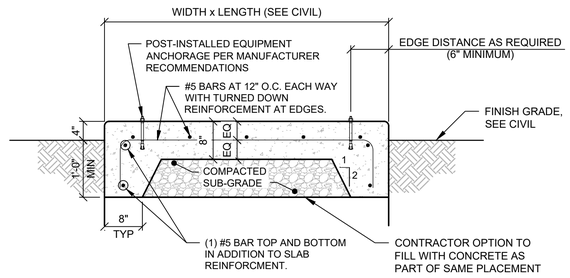

NOTE:
1. SEE 1/S-501 FOR TYPICAL BASE PREPARATION BELOW FOOTING.

3 TYPICAL EXTERIOR EQUIPMENT PAD
3/4" = 1'-0"

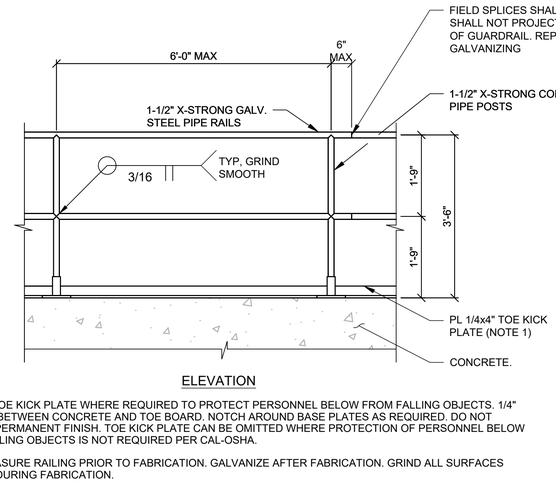

ELEVATION

NOTES:

1. INSTALL TOE KICK PLATE WHERE REQUIRED TO PROTECT PERSONNEL BELOW FROM FALLING OBJECTS. 1/4" MAX GAP BETWEEN CONCRETE AND TOE BOARD. NOTCH AROUND BASE PLATES AS REQUIRED. DO NOT DAMAGE PERMANENT FINISH. TOE KICK PLATE CAN BE OMITTED WHERE PROTECTION OF PERSONNEL BELOW FROM FALLING OBJECTS IS NOT REQUIRED PER CAL-OSHA.
2. FIELD MEASURE RAILING PRIOR TO FABRICATION. GALVANIZE AFTER FABRICATION. GRIND ALL SURFACES SMOOTH DURING FABRICATION.
3. (4) 1/2" DIA HILTI KWIK BOLT TZ-SS W/ 3 1/4" EMBED OR APPROVED EQUAL MAY BE USED AS AN ALTERNATIVE TO THREADED RODS ADHESIVE ANCHORS. ISOLATE DISSIMILAR METALS W/ BITUMINOUS COATING.
4. HOT-DIP GALVANIZE ALL STEEL AFTER FABRICATION.

1 TYPICAL HANDRAIL DETAIL
NTS

US Army Corps of Engineers®

MARK	DESCRIPTION	DATE

DESIGNED BY: C.STEPHEN
DRAWN BY: E. DIOCSON
CHECKED BY: S. SULLIVAN
SUBMITTED BY: J. KASHIWADA
ISSUE DATE: 05/06/2019
SOLICITATION NO.:
CONTRACT NO.:
FILE NO: 1-04-0642
SIZE: ANSI D
SPEC NO: 2122
FILE NAME: S-502.dwg

U.S. ARMY CORPS OF ENGINEERS
SACRAMENTO DISTRICT

MEAD & HUNT, INC.
180 PROMENADE CIRCLE, SUITE 240
SACRAMENTO, CA 95834

AMERICAN RIVER COMMON FEATURES
NATOMAS BASIN REACH B
RIVERSIDE CANAL PHASE 2 RELOCATION PROJECT

STRUCTURAL SUPPORT DETAILS

SHEET ID
S-502

X:\19415001\161390.01\TECH\CAD\Riverside Canal\S-502.dwg

FINAL ISSUE FOR BID

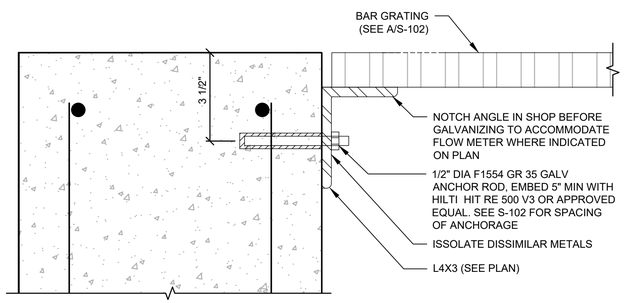

NOTE:
1. HOT-DIP GALVANIZE STEEL AFTER FABRICATION.

6 SECTION AT GRATING SUPPORT
1" = 3"

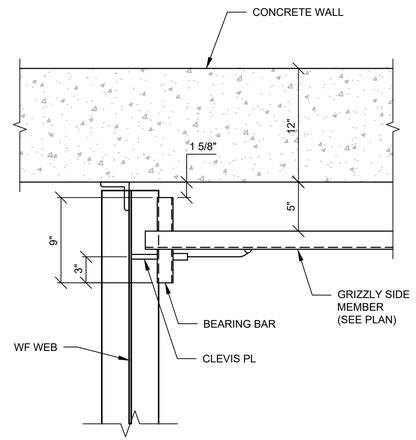

NOTE:
1. HOT-DIP GALVANIZE STEEL AFTER FABRICATION.

4 BEARING BAR DETAIL
1-1/2" = 1'-0"

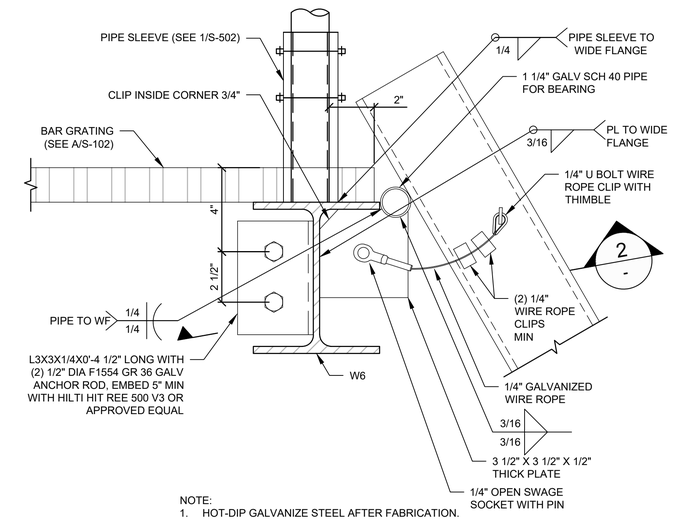

NOTE:
1. HOT-DIP GALVANIZE STEEL AFTER FABRICATION.

1 SECTION AT GRATING SUPPORT
1" = 3"

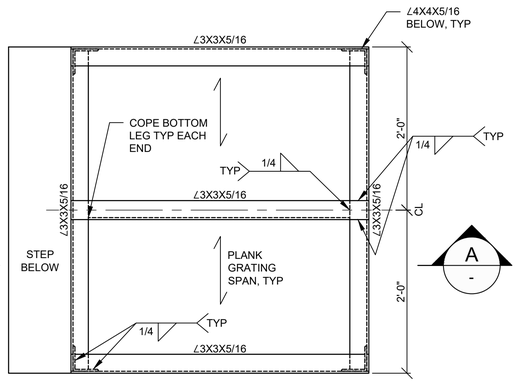

TOP OF STEEL PLAN AT EL 33.33 (PLATFORM)

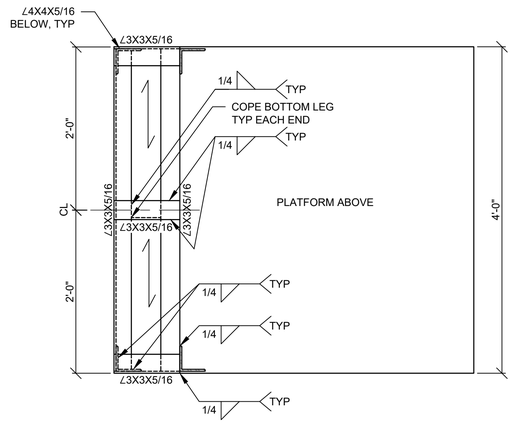

TOP OF STEEL PLAN AT EL 32.67 (STEP)

5 PLATFORM PLAN
1" = 1'-0"

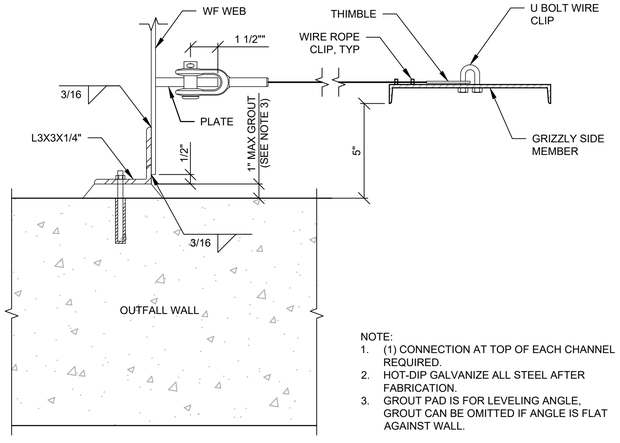

NOTE:
1. (1) CONNECTION AT TOP OF EACH CHANNEL REQUIRED.
2. HOT-DIP GALVANIZE ALL STEEL AFTER FABRICATION.
3. GROUT PAD IS FOR LEVELING ANGLE, GROUT CAN BE OMITTED IF ANGLE IS FLAT AGAINST WALL.

2 OUTFALL TOP CONNECTION DETAIL
3" = 1'-0"

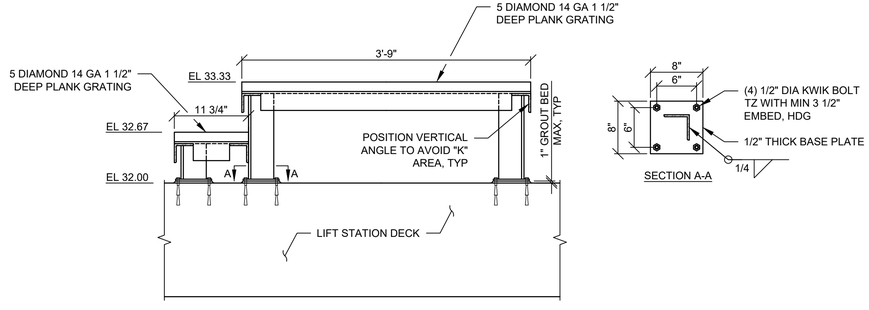

A PLATFORM SECTION
1" = 1'-0"

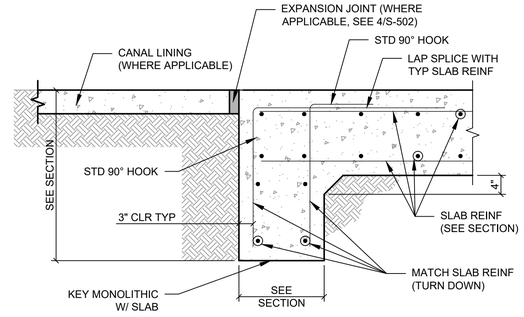

3 KEY REINFORCEMENT DETAIL
3/4" = 1'-0"

US Army Corps of Engineers®

MARK	DESCRIPTION	DATE

DESIGNED BY:	
C. STEPHEN	
DRAWN BY:	
E. DIOCSON	
CHECKED BY:	
S. SULLIVAN	
SUBMITTED BY:	
J. KASHIWADA	
SIZE:	SPEC NO:
ANSI D	2122

ISSUE DATE:	
05/06/2010	
SOLICITATION NO.:	
CONTRACT NO.:	
FILE NO:	
1-04-0642	
FILE NAME:	
S-503.dwg	

U.S. ARMY CORPS OF ENGINEERS
SACRAMENTO DISTRICT

MEAD & HUNT, INC.
180 PROMENADE CIRCLE, SUITE 240
SACRAMENTO, CA 95834

AMERICAN RIVER COMMON FEATURES
NATOMAS BASIN REACH B
RIVERSIDE CANAL PHASE 2 RELOCATION PROJECT

MISCELLANEOUS STRUCTURAL DETAILS

SHEET ID

S-503

X:\19941500\161390.01\TECH\CAD\Riverside Canal\S-503.dwg

FINAL ISSUE FOR BID

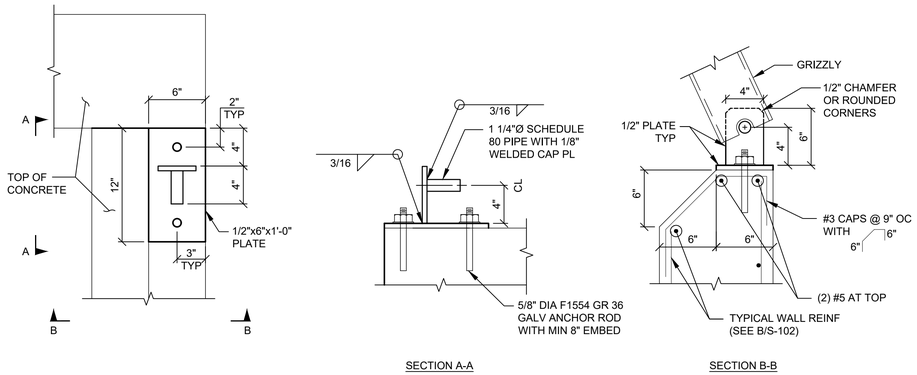

SECTION A-A

SECTION B-B

NOTE:
1. HOT-DIP GALVANIZE STEEL AFTER FABRICATION.

2 GRIZZLY BASE DETAIL

1 1/2" = 1'-0"

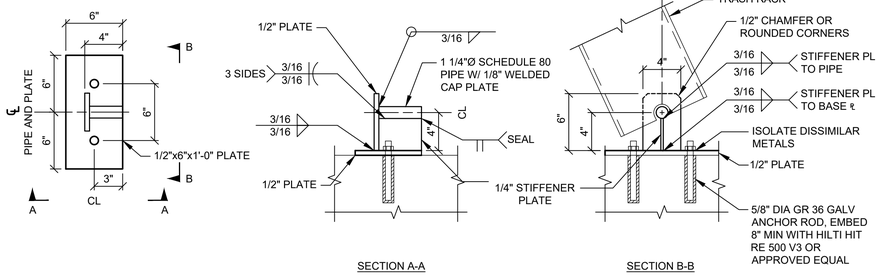

SECTION A-A

SECTION B-B

NOTE:
1. HOT-DIP GALVANIZE STEEL AFTER FABRICATION.

1 TRASH RACK BASE DETAIL

1 1/2" = 1'-0"

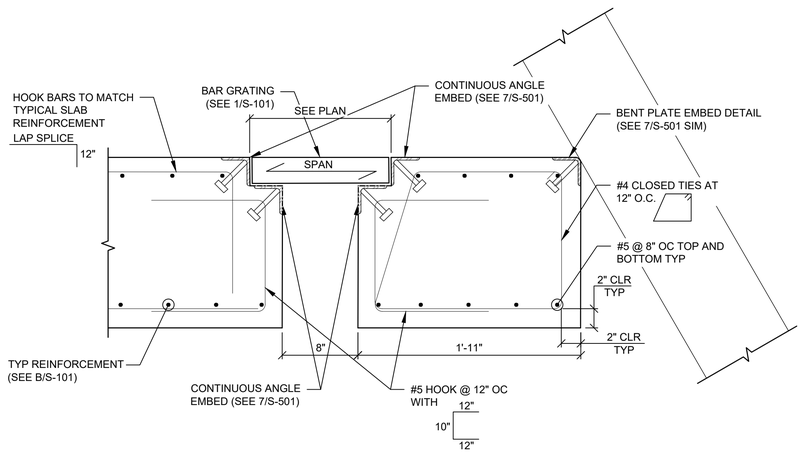

3 SECTION AT GRATING

1 1/2" = 1'-0"

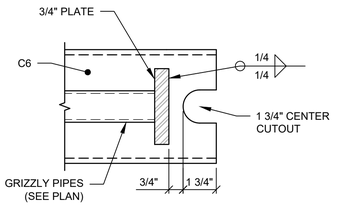

C GRIZZLY BASE MEMBER SECTION

3" = 1'-0"

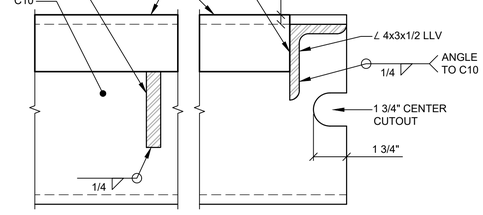

A TRASH RACK BASE MEMBER SECTION

3" = 1'-0"

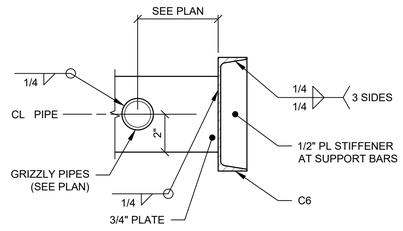

D GRIZZLY PANEL SECTION

3" = 1'-0"

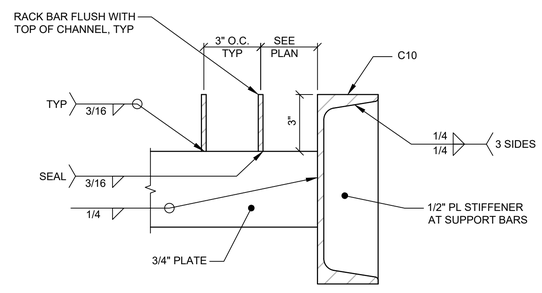

B TRASH RACK PANEL SECTION

3" = 1'-0"

US Army Corps of Engineers®

MARK	DESCRIPTION	DATE

ISSUE DATE: 05/06/2019
SOLICITATION NO.:
CONTRACT NO.:
FILE NO: 1-04-0642
FILE NAME: S-504.dwg

DESIGNED BY: D. STEPHER
DRAWN BY: E. DIOCSON
CHECKED BY: S. SULLIVAN
SUBMITTED BY: J. KASHIWADA
SIZE: ANSI D
SPEC NO.: 2722

U.S. ARMY CORPS OF ENGINEERS
SACRAMENTO DISTRICT

MEAD & HUNT, INC.
180 PROMENADE CIRCLE, SUITE 240
SACRAMENTO, CA 95834

AMERICAN RIVER COMMON FEATURES
NATOMAS BASIN REACH B
RIVERSIDE CANAL PHASE 2 RELOCATION PROJECT

MISCELLANEOUS STRUCTURAL DETAILS

SHEET ID
S-504

X:\19415001\161390.01\TECH\CAD\Riverside Canal\S-504.dwg

FINAL ISSUE FOR BID

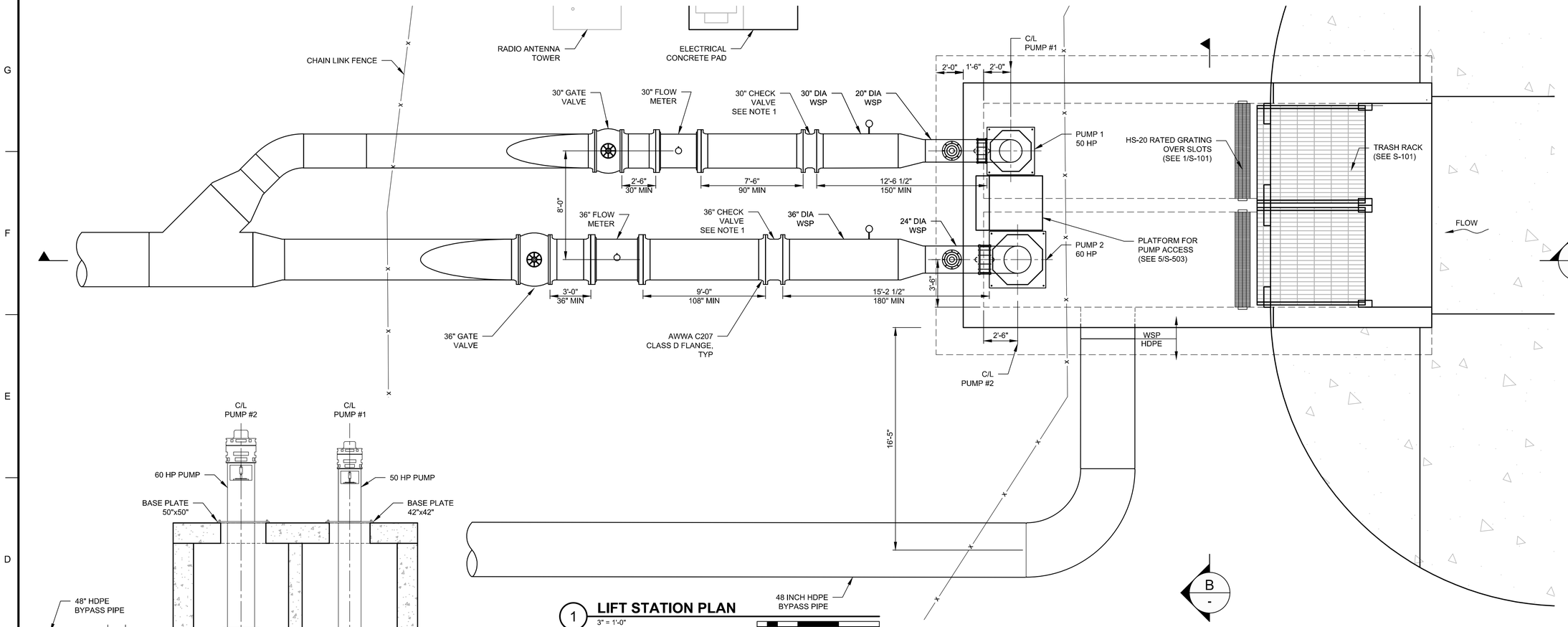

1 LIFT STATION PLAN

3" = 1'-0"

0 3' 6' 9'

NOTES:

1. SEE STRUCTURAL FOR REINFORCEMENT

B LIFT STATION SECTION

3" = 1'-0"

0 3' 6' 9'

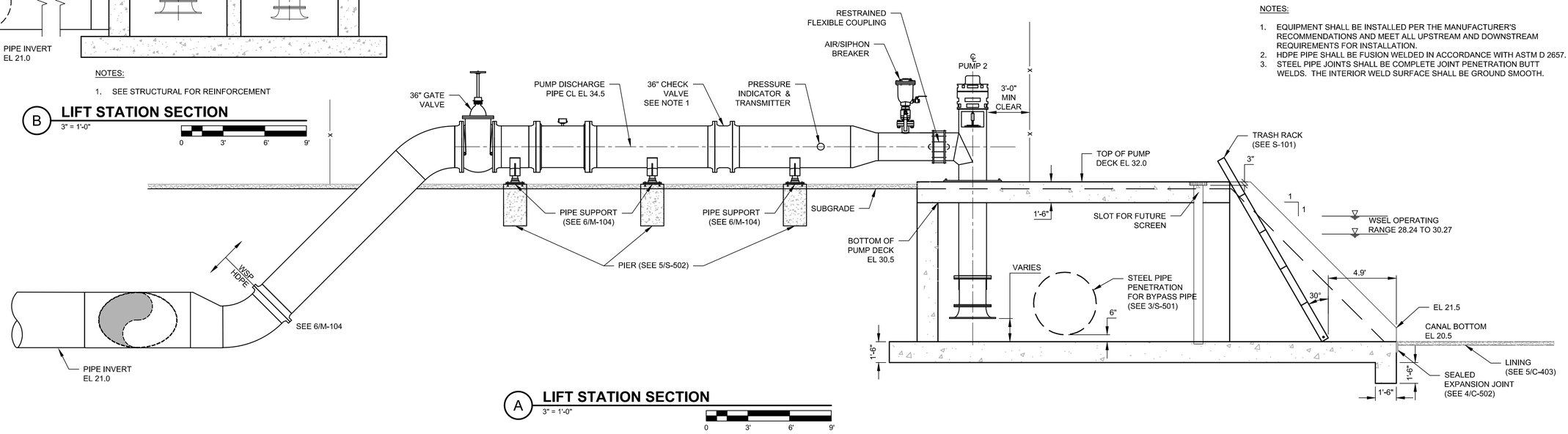

A LIFT STATION SECTION

3" = 1'-0"

0 3' 6' 9'

NOTES:

1. EQUIPMENT SHALL BE INSTALLED PER THE MANUFACTURER'S RECOMMENDATIONS AND MEET ALL UPSTREAM AND DOWNSTREAM REQUIREMENTS FOR INSTALLATION.
2. HDPE PIPE SHALL BE FUSION WELDED IN ACCORDANCE WITH ASTM D 2657.
3. STEEL PIPE JOINTS SHALL BE COMPLETE JOINT PENETRATION BUTT WELDS. THE INTERIOR WELD SURFACE SHALL BE GROUND SMOOTH.

US Army Corps of Engineers®

MARK	DESCRIPTION	DATE

ISSUE DATE: 05/09/2019
SOLICITATION NO.:
CONTRACT NO.:
FILE NO: 1-04-0642
FILE NAME: LIFT STATION PLAN.dgn

DESIGNED BY: C. STEPPER
DRAWN BY: E. DIOCSON
CHECKED BY: S. SULLIVAN
SUBMITTED BY: J. KASHIWADA
SIZE: ANSI D
SPEC NO: 2222

U.S. ARMY CORPS OF ENGINEERS
SACRAMENTO DISTRICT

MEAD & HUNT, INC.
180 PROMENADE CIRCLE, SUITE 240
SACRAMENTO, CA 95834

AMERICAN RIVER COMMON FEATURES
NATOMAS BASIN REACH B
RIVERSIDE CANAL PHASE 2 RELOCATION PROJECT

GENERAL ARRANGEMENT LIFT STATION PLAN

SHEET ID

M-101

X:\19415001\161390.01\TECH\CAD\Riverside Canal\LIFT STATION PLAN.dwg

FINAL ISSUE FOR BID

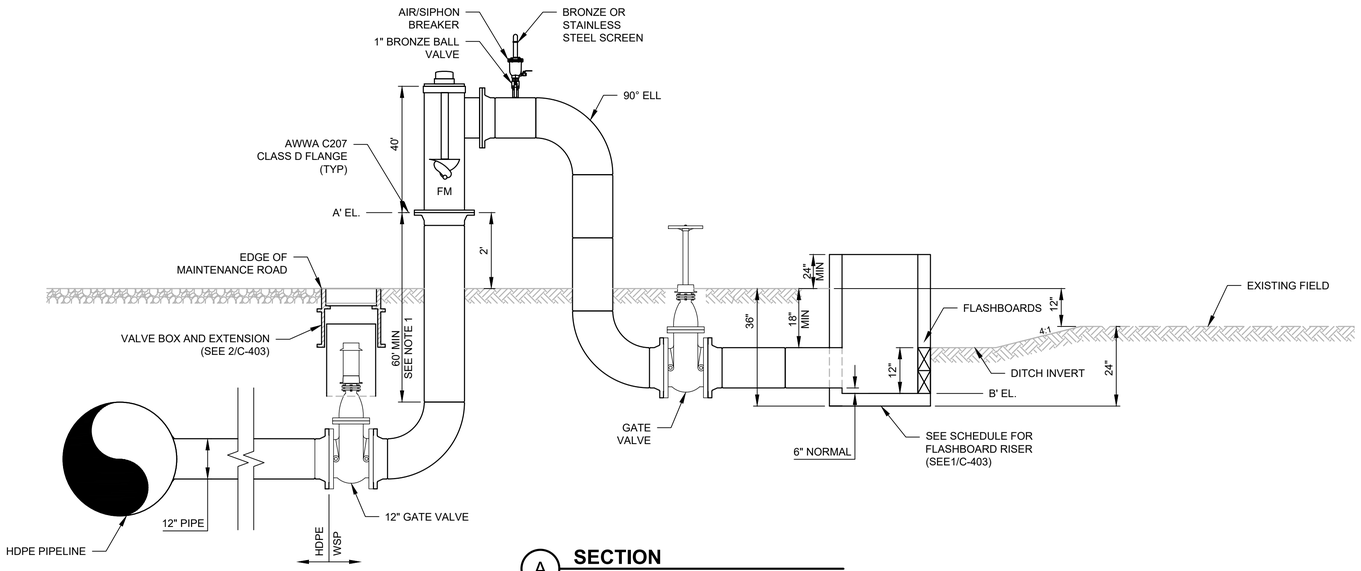

A **SECTION**
1/2" = 1'-0"

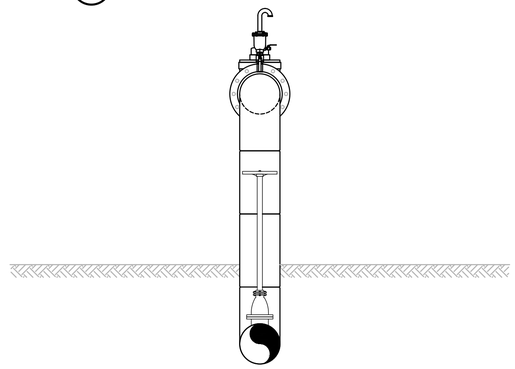

B **SECTION**
1/2" = 1'-0"

NOTES:

1. EQUIPMENT SHALL BE INSTALLED PER THE MANUFACTURER'S RECOMMENDATIONS AND MEET ALL UPSTREAM AND DOWNSTREAM REQUIREMENTS FOR INSTALLATION.
2. HDPE PIPE SHALL BE FUSION WELDED IN ACCORDANCE WITH ASTM D 2657.
3. STEEL PIPE JOINTS SHALL BE COMPLETE JOINT PENETRATION BUTT WELDS. THE INTERIOR WELD SURFACE SHALL BE GROUND SMOOTH.

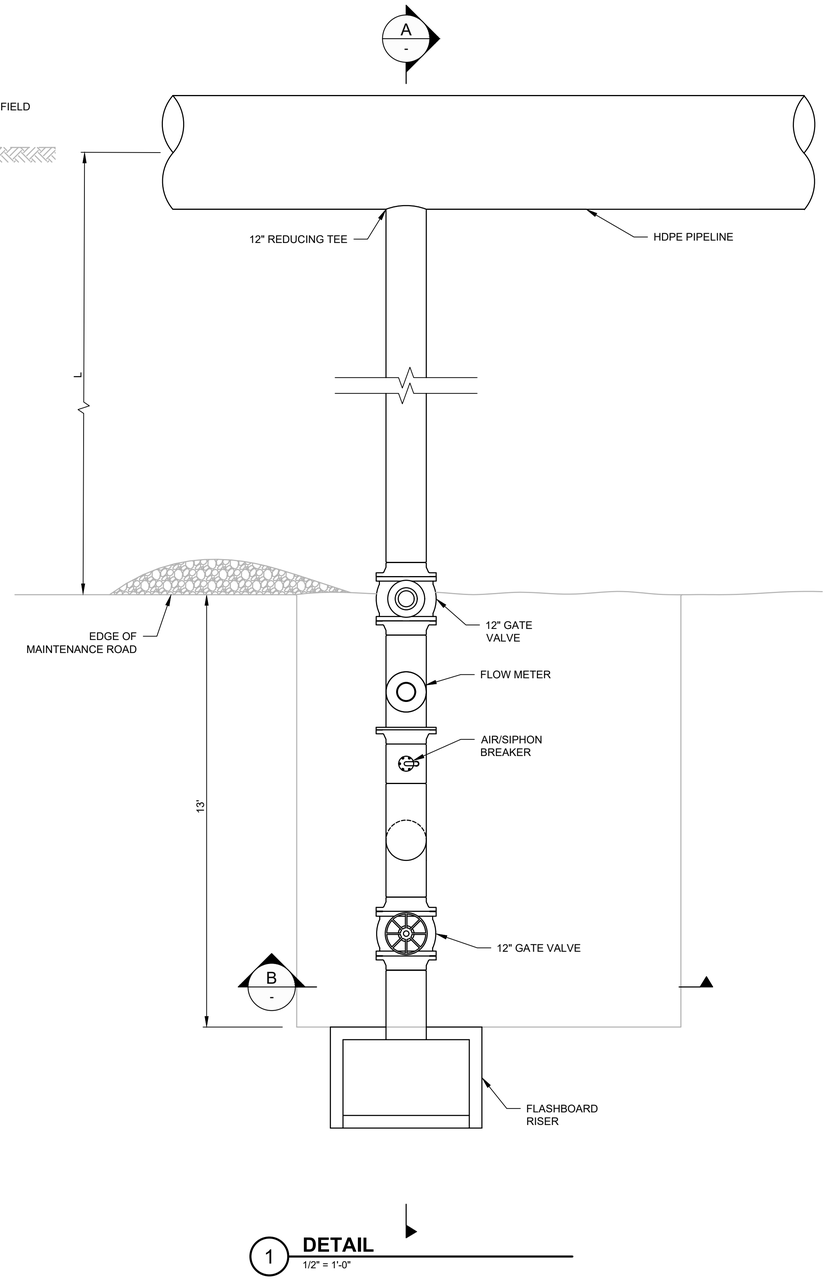

1 **DETAIL**
1/2" = 1'-0"

ALIGNMENT	STATION	DESCRIPTION	ELEVATION A	ELEVATION B	L
RIVERSIDE	177+47	S58	26.43	21.67	7.0
RIVERSIDE	187+80	S66	22.75	18.08	7.0
RIVERSIDE	206+79	S68A	24.00	19.33	7.0
RIVERSIDE	219+79	S68B	25.98	21.31	7.0
RIVERSIDE	225+57	S86	24.97	20.30	24.8
RIVERSIDE	225+69	S90A	25.00	20.33	24.8
RIVERSIDE	235+46	S87	18.59	13.92	12.7
RIVERSIDE	263+34	S91	20.04	15.37	12.1
RIVERSIDE	264+78	S96A	18.12	13.45	24.5
RIVERSIDE	276+09	S96B	20.04	15.37	12.5
RIVERSIDE	296+76	S105	21.73	17.06	24.6
RIVERSIDE	296+86	S99	20.64	15.97	27.1
RIVERSIDE	302+93	S107	22.47	17.80	35.2
LATERAL 12	9+51	S60	26.10	19.40	0.0
LATERAL 13	0+68	S69	20.69	16.02	20.0
PARKER RD	13+87	S90B	23.32	18.65	31.8
PARKER RD	13+97	S95	22.73	18.06	18.8
PARKER RD	14+22	S90C	23.51	18.84	32.2
BRYTE BEND RD	0+37	S100	22.05	17.38	29.1

US Army Corps of Engineers®

NO.	DESCRIPTION	DATE

DESIGNED BY: C. HIRSCHMANN
DRAWN BY: E. DIOCSON
CHECKED BY: S. SULLIVAN
SUBMITTED BY: J. KASHIWADA
SIZE: ANSI D
ISSUE DATE: 05/06/2019
SOLICITATION NO.:
CONTRACT NO.:
FILE NO. 1-04-0642
FILE NAME: FIELD IRRIGATION TURNOUTS.DWG
SPEC NO. 2122

U.S. ARMY CORPS OF ENGINEERS
SACRAMENTO DISTRICT

MEAD & HUNT, INC.
180 PROMENADE CIRCLE, SUITE 240
SACRAMENTO, CA 95834

AMERICAN RIVER COMMON FEATURES
NATOMAS BASIN REACH B
RIVERSIDE CANAL PHASE 2 RELOCATION PROJECT

FIELD IRRIGATION TURNOUTS

SHEET ID
M-102

X:\19941500\161390.01\TECH\CAD\Riverside Canal\FIELD IRRIGATION TURNOUTS.dwg

FINAL ISSUE FOR BID

STATION	DESCRIPTION	ELEVATION A	L
267+52	S121	19.35	19.5
271+46	S101	19.82	27.5
273+84	S122	20.37	24.6
276+44	S123	20.67	29.2
279+40	S102	20.62	28.3
282+29	S124	20.57	27.7
286+55	S125	20.07	25.0

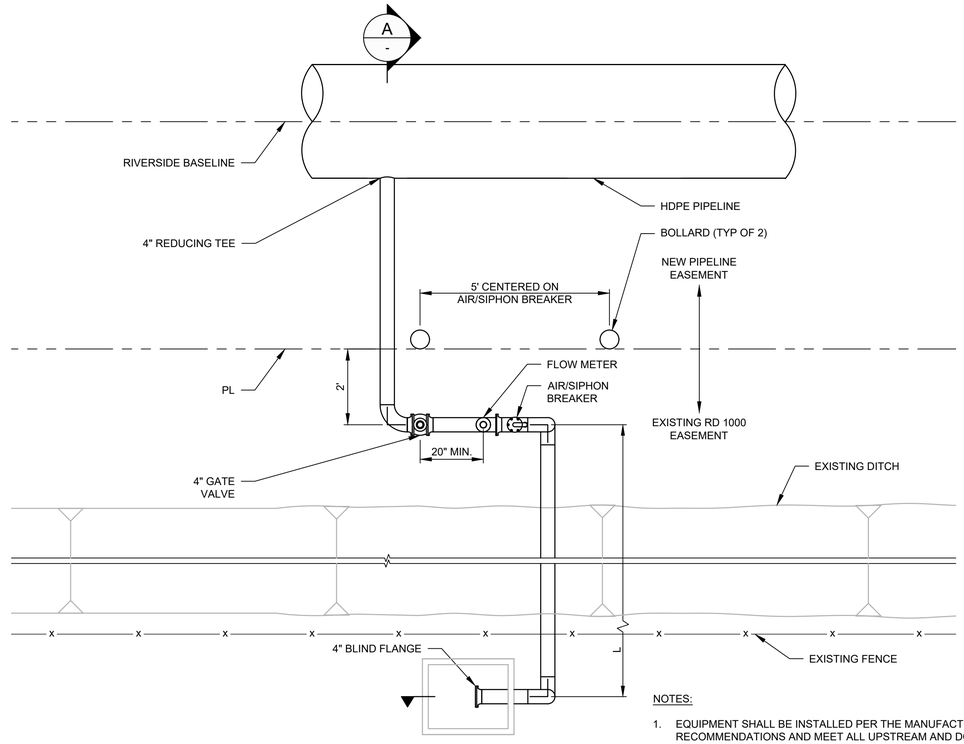

NOTES:

1. EQUIPMENT SHALL BE INSTALLED PER THE MANUFACTURER'S RECOMMENDATIONS AND MEET ALL UPSTREAM AND DOWNSTREAM REQUIREMENTS FOR INSTALLATION.
2. HDPE PIPE SHALL BE FUSION WELDED IN ACCORDANCE WITH ASTM D 2657.
3. STEEL PIPE JOINTS SHALL BE COMPLETE JOINT PENETRATION BUTT WELDS. THE INTERIOR WELD SURFACE SHALL BE GROUND SMOOTH.

1 DETAIL
1/2" = 1'-0"

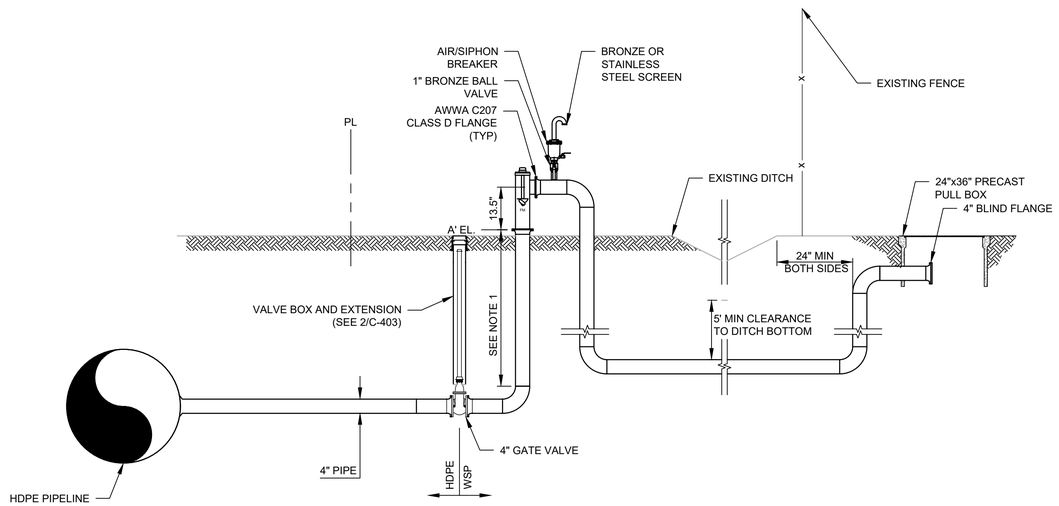

A PROFILE
1/2" = 1'-0"

US Army Corps of Engineers®

NO.	DESCRIPTION	DATE
	TURNOUTS	

DESIGNED BY: C. HIRSCHMANN
DRAWN BY: E. DIOCSON
CHECKED BY: S. SULLIVAN
SUBMITTED BY: J. KASHIWADA
SIZE: ANSI D
ISSUE DATE: 05/06/2019
SOLICITATION NO.:
CONTRACT NO.:
FILE NO. 1-04-0642
FILE NAME: RANCHETTE IRRIGATION
SPEC NO: 2122

U.S. ARMY CORPS OF ENGINEERS
SACRAMENTO DISTRICT

MEAD & HUNT, INC.
180 PROMENADE CIRCLE, SUITE 240
SACRAMENTO, CA 95834

AMERICAN RIVER COMMON FEATURES
NATOMAS BASIN REACH B
RIVERSIDE CANAL PHASE 2 RELOCATION PROJECT

RANCHETTE IRRIGATION TURNOUTS

SHEET ID
M-103

X:\19941500\161390.01\TECH\CAD\Riverside Canal\RANCHETTE IRRIGATION TURNOUTS.dwg

FINAL ISSUE FOR BID

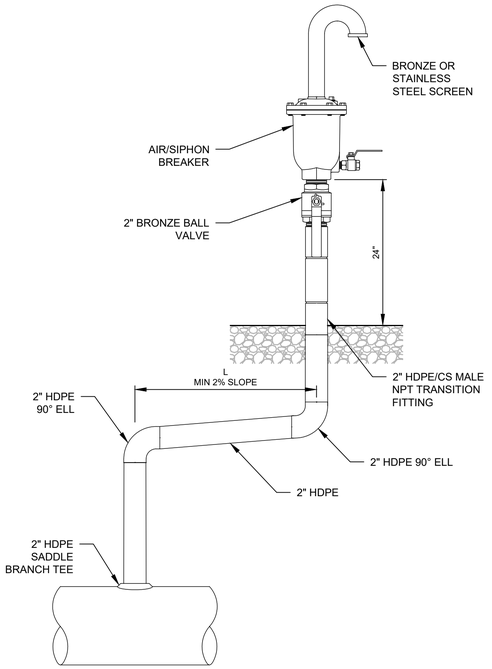

7 AIR VENT DETAIL

1" = 1'-0"

0 1/2' 1' 2'

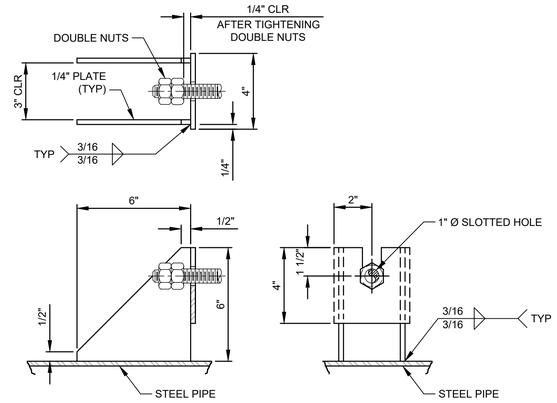

4 TYPICAL TENSION LUG DETAILS

3" = 1'-0"

0 3' 6' 9'

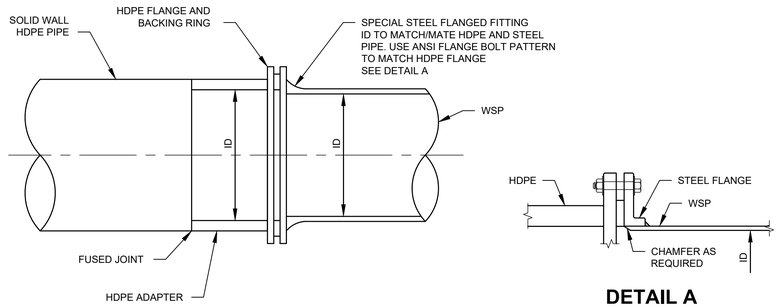

DETAIL A

5 HDPE CONNECTION

1/2" = 1'-0"

0 1' 2' 4'

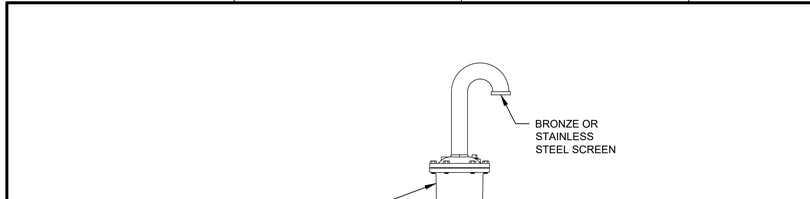

PLAN

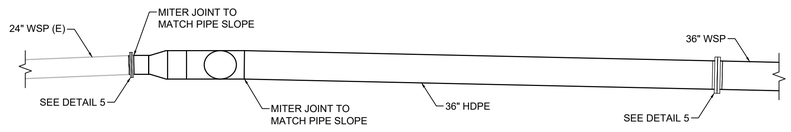

ELEVATION

8 CONNECTION TO EXISTING WSP

NOT TO SCALE

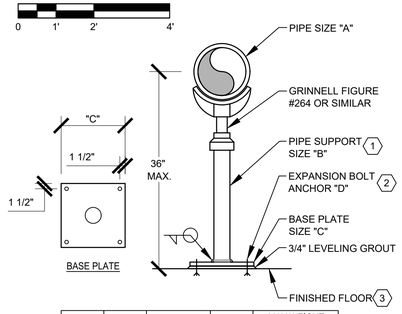

"A"	"B"	"C"	"D"	MAX WEIGHT (LBS)
3	2 1/2	1/2x9x9	3/8	170
4	3	1/2x9x9	1/2	330
6	4	3/4x10x10	1/2	780
8	4	3/4x10x10	1/2	1240
10	6	7/8x12x12	3/4	2200
12	6	7/8x12x12	3/4	2280
14	6	7/8x12x12	3/4	2640
16	6	7/8x12x12	3/4	3260
18	10	1x16x16	1	4940
20	10	1x16x16	1	5890
24	10	1x16x16	1	7300
30	10	1x16x16	1	7300
32	10	1x16x16	1	7300
36	10	1x16x16	1	7300

NOTES:

1. PIPE SUPPORT SHALL BE ASME A53, GRADE B, TYPE E OR S, STANDARD WEIGHT, BLACK STEEL.
2. EXPANSION BOLT ANCHORS SHALL HAVE ICBO OR EQUIVALENT LISTING.
3. CONCRETE FLOOR SLAB SHALL HAVE MIN. 4000 PSI.
4. ALL DIMENSIONS ARE SHOWN IN INCHES.

6 HORIZONTAL PIPE SUPPORT

1" = 1'-0"

0 1/2' 1' 2'

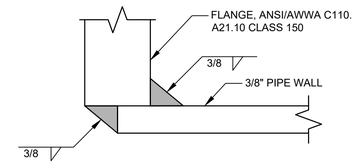

1 TYPICAL FLANGE WELD DETAIL

1/2" = 1'-0"

0 1' 2' 4'

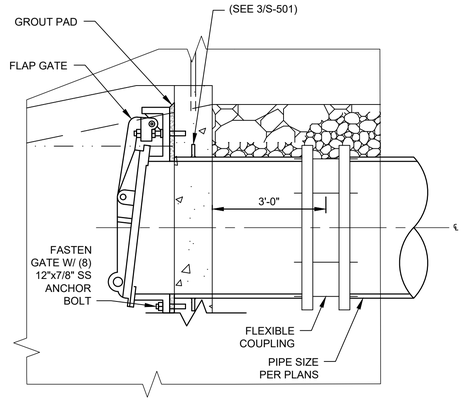

2 PIPE TERMINATION AT OUTFALL

1" = 2'

0 1 2 4

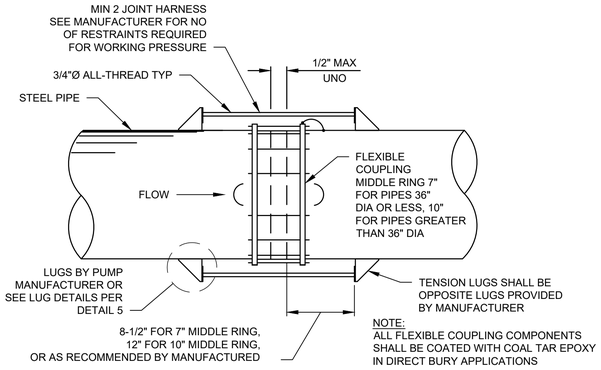

3 RESTRAINED FLEXIBLE COUPLING DETAIL

1" = 1'-0"

0 1/2' 1' 2'

US Army Corps of Engineers®

MARK	DESCRIPTION	DATE

DESIGNED BY: C. HIRSCHMANN
DRAWN BY: E. DIOCSON
CHECKED BY: S. SULLIVAN
SUBMITTED BY: J. KASHIWADA
SIZE: ANSI D
ISSUE DATE: 05/06/2010
SOLICITATION NO.:
CONTRACT NO.:
FILE NO: 1-04-0642
FILE NAME: TYPICAL DETAILS.dwg
SPEC NO: 2122

U.S. ARMY CORPS OF ENGINEERS
SACRAMENTO DISTRICT

MEAD & HUNT, INC.
180 PROMENADE CIRCLE, SUITE 240
SACRAMENTO, CA 95834

AMERICAN RIVER COMMON FEATURES
NATOMAS BASIN REACH B
RIVERSIDE CANAL PHASE 2 RELOCATION PROJECT

TYPICAL DETAILS

SHEET ID

M-104

X:\1941500\161390.01\TECH\CAD\Riverside Canal\TYPICAL DETAILS.dwg

FINAL ISSUE FOR BID

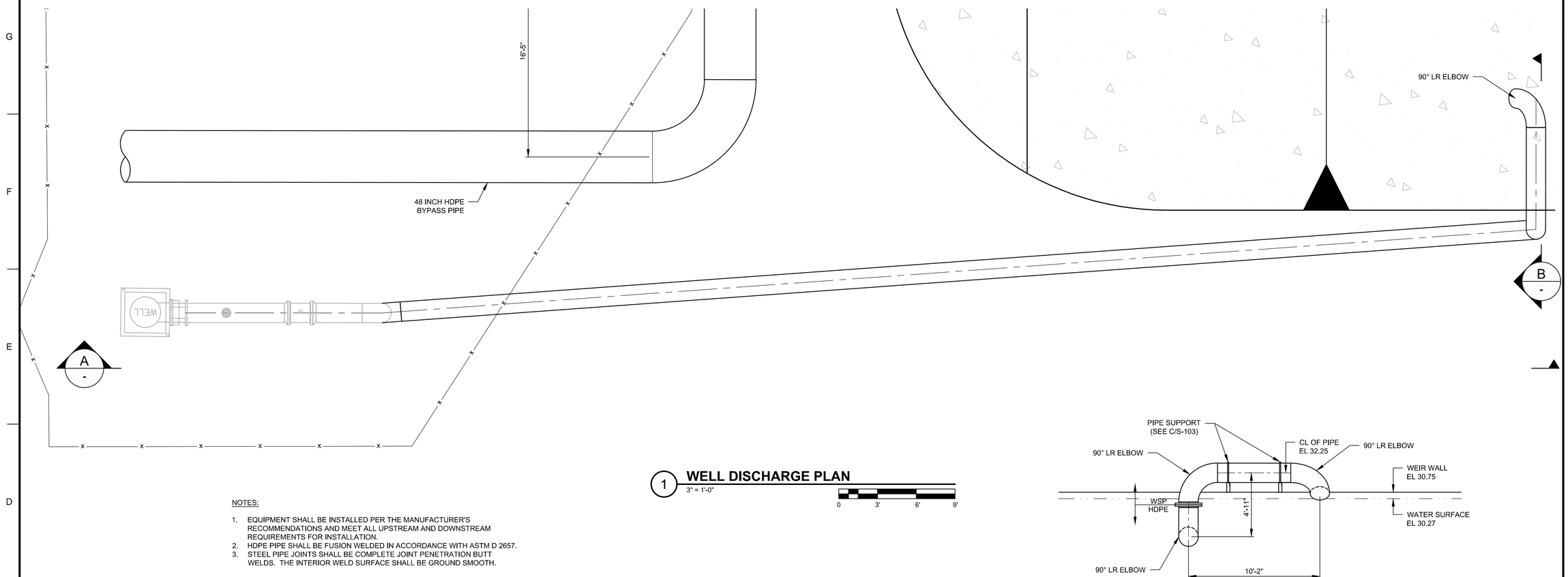

1 WELL DISCHARGE PLAN

3" = 1'-0"

0 3' 6' 9'

NOTES:

1. EQUIPMENT SHALL BE INSTALLED PER THE MANUFACTURER'S RECOMMENDATIONS AND MEET ALL UPSTREAM AND DOWNSTREAM REQUIREMENTS FOR INSTALLATION.
2. HDPE PIPE SHALL BE FUSION WELDED IN ACCORDANCE WITH ASTM D 2657.
3. STEEL PIPE JOINTS SHALL BE COMPLETE JOINT PENETRATION BUTT WELDS. THE INTERIOR WELD SURFACE SHALL BE GROUND SMOOTH.

B WELL DISCHARGE PIPE SECTION

3" = 1'-0"

0 3' 6' 9'

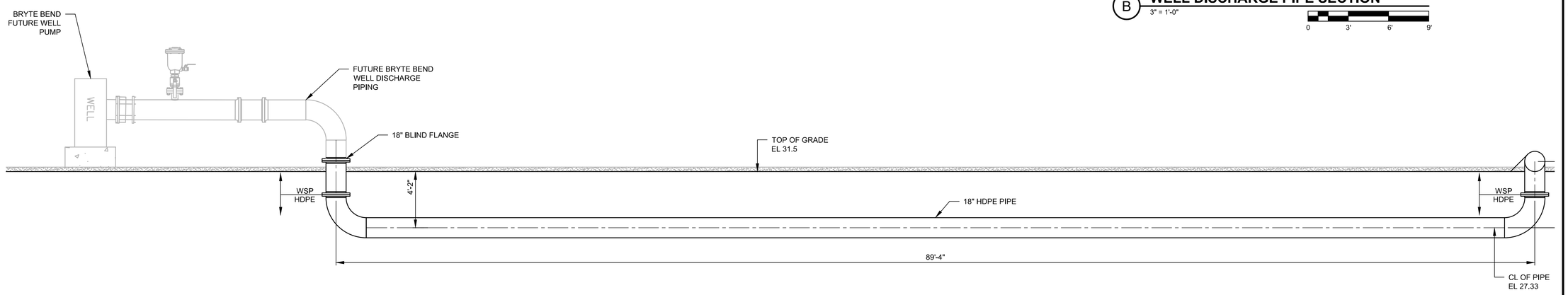

A WELL DISCHARGE PIPE SECTION

3" = 1'-0"

0 3' 6' 9'

US Army Corps of Engineers®

NO.	MARK	DESCRIPTION	DATE

DESIGNED BY: C. STEPPER
DRAWN BY: E. DIOCSON
CHECKED BY: S. SULLIVAN
SUBMITTED BY: J. KASHIWADA
SIZE: ANSI D
ISSUE DATE: 05/06/2019
SOLICITATION NO.:
CONTRACT NO.:
FILE NO: 1-04-0842
FILE NAME: WELL DISCHARGE PLAN.dwg
SPEC NO: 2122

U.S. ARMY CORPS OF ENGINEERS
SACRAMENTO DISTRICT

MEAD & HUNT, INC.
180 PROMENADE CIRCLE, SUITE 240
SACRAMENTO, CA 95834

AMERICAN RIVER COMMON FEATURES
NATOMAS BASIN REACH B
RIVERSIDE CANAL PHASE 2 RELOCATION PROJECT

GENERAL ARRANGEMENT
WELL DISCHARGE PLAN

SHEET ID

M-105

X:\19941500\161390.01\TECH\CAD\Riverside Canal\WELL DISCHARGE PLAN.dwg

FINAL ISSUE FOR BID

LIGHT FIXTURE SCHEDULE

TYPE	DESCRIPTION	MODEL NUMBER
A	LED AREA LUMINAIRE, POLE MOUNTED, AREA DISTRIBUTION, CONTROLLED VIA PHOTOCELL. MOUNTING FOR SQUARE POLE SINGLE SIDE. POLE TO BE SQUARE STRAIGHT ALUMINUM POLE, BLACK.	LITHONIA: DSX1LED-P2-40K-T5M-MVOLT-SPA-PIRH-BS-DBLXD OR EQUAL POLE: SSA-18-4G-MD19-UL-DBLXD OR EQUAL
B	LED AREA LUMINAIRE, POLE MOUNTED, AREA DISTRIBUTION, CONTROLLED VIA LIGHT SWITCH. MOUNTING FOR SQUARE POLE DOUBLE SIDE AT 180 APART. POLE TO BE SQUARE STRAIGHT ALUMINUM POLE, BLACK.	LITHONIA: DSX2LED-P4-40K-T5M-MVOLT-SPA-PIRH-BS-DBLXD OR EQUAL POLE: SSA-18-4G-MD28-UL-DBLXD OR EQUAL

LUMINAIRE SYMBOLS

- RECESSED LUMINAIRE
- RECESSED TROFFER
- RECESSED LINEAR
- SURFACE LUMINAIRE
- SURFACE LINEAR
- SURFACE COVE STRIP
- PENDANT LUMINAIRE
- PENDANT LINEAR
- PENDANT INDUSTRIAL
- (#) TRACK (# INDICATES NUMBER TRACK HEADS)
- WALL BRACKET
- WALL SURFACE LINEAR
- WALL RECESSED LINEAR
- CEILING MOUNTED EXIT SIGN
- WALL MOUNTED EXIT SIGN
- ARROW DENOTES EXIT SIGN CHEVRON
- EMERGENCY BATTERY UNIT
- RECESSED EMERGENCY BATTERY UNIT
- WALL WASH MODIFIER
- EMERGENCY SHADING MODIFIER (PARTIAL OR FULL SHADE)

LUMINAIRE CIRCUITRY & CONTROL KEY:

A1 — LUMINAIRE TYPE

1Ra
- LOWER CASE LETTER INDICATES SWITCHLEG CONTROL
- "R" INDICATES LIGHTING CONTROL PANEL REFER TO LIGHTING CONTROL PANEL SCHEDULE
- NUMBER INDICATES BRANCH PANEL CIRCUIT NUMBER

LUMINAIRE CONTROL SYMBOLS

- PE — PHOTO ELECTRIC CONTROL
- LC — LIGHTING CONTACTOR
- S — SINGLE POLE SWITCH

SWITCH NOTATIONS:
- 3 DENOTES 3-WAY SWITCH
- 4 DENOTES 4-WAY SWITCH
- WL DENOTES WET LOCATION SWITCH
- D DENOTES DIMMER SWITCH
- T DENOTES TIMMER SWITCH
- K DENOTES KEY SWITCH
- P DENOTES PILOT SWITCH
- O DENOTES OCCUPANCY SENSOR

RACEWAYS SYMBOLS

- ABOVEGROUND CONDUIT
- UNDERGROUND CONDUIT
- CONCEALED CONDUIT IN CEILING OR WALL
- WIREWAY, SIZE AND TYPE AS INDICATED ON DRAWINGS
- JUNCTION BOX

MOTORS & MOTOR CONTROL SYMBOLS

- 3 PHASE MOTOR CONNECTION
- 1 PHASE MOTOR CONNECTION
- EQUIPMENT CONNECTION
- COMBINATION MAGNETIC MOTOR CONTROLLER
- M — MANUAL MOTOR CONTROLLER (3 PHASE)
- SS — SOLID STATE MOTOR CONTROLLER
- VFD — VARIABLE FREQUENCY MOTOR CONTROLLER
- MAGNETIC MOTOR CONTROLLER
- NON-FUSED DISCONNECT SWITCH
- FUSED DISCONNECT SWITCH
- DOUBLE THROW SWITCH
- S_F — FUSED SINGLE POLE SWITCH
- S_M — MOTOR RATED STARTER / DISCONNECT SWITCH
- PUSH BUTTON STATION
- MOTOR CONTROL CENTER

RECEPTACLE SYMBOLS

- 60" — DUPLEX RECEPTACLE TEXT INDICATES MOUNTING HEIGHT
- WELDING RECEPTACLE
- DISCONNECT/WELDING RECEPTACLE
- 4X — DISCONNECT/WELDING RECEPTACLE, NEMA 4X
- SURFACE METAL RACEWAY - REFER TO DRAWINGS AND/OR SPECIFICATIONS, MOUNTED 6" ABOVE COUNTER OR AT HEIGHT AS INDICATED.

SERVICE & DISTRIBUTION SYMBOLS

- M — UTILITY METER SOCKET
- SWBD-x — SWITCHBOARD (x REPRESENTS SWITCHBOARD DESIGNATION)
- M — CUSTOMER METERING
- PFC — POWER FACTOR CORRECTION CAPACITOR
- AHF — ACTIVE HARMONIC FILTER
- GROUND ACCESS WELL
- GROUND ROD
- —G— GROUNDING CONDUCTOR
- T — GENERAL LIGHTING AND POWER TRANSFORMER-DRY TYPE
- NEW PANELBOARD

SITE SYMBOLS

- GROUND MOUNTED LIGHT (ABOVE OR BELOW GRADE)
- E — ELECTRIC HANDHOLE
- HH — HANDHOLE, GENERIC
- E — ELECTRIC MANHOLE
- M — ELECTRIC METER
- ELECTRIC SERVICE PANEL
- TRANS — ELECTRIC TRANSFORMER
- ELECTRIC PEDESTAL BOX
- FLOOD LIGHT POLE
- BOLLARD LIGHT
- DOUBLE LIGHT POLE
- LIGHT POLE
- POWER POLE
- DOUBLE POWER POLE
- POWER POLE WITH LIGHT

ABBREVIATIONS

ACCU	AIR COOLED CONDENSING UNIT
A/E	ARCHITECT/ENGINEER
AFF	ABOVE FINISHED FLOOR
AFG	ABOVE FINISHED GRADE
AHU	AIR HANDLING UNIT
ALT	ALTERNATE
C	CONDUIT
CF	CIRCULATION FAN
CHWP	CHILLED WATER PUMP
CP	CIRCULATION PUMP
CUH	CABINET UNIT HEATER
DH	DUCT HEATER
DO	DOOR OPERATOR
EF	EXHAUST FAN
EL	EMERGENCY LIGHT
EMT	ELECTRICAL METALLIC TUBING
ETR	EXISTING TO REMAIN
EWC	ELECTRICAL WATER COOLER
EWH	ELECTRICAL WATER HEATER
FA	FIRE ALARM
FAF	FORCED AIR FURNACE
GFI	GROUND FAULT INTERRUPTER
GRS	GALVANIZED RIGID STEEL
GWH	GAS WATER HEATER
HD	HAND DRYER
HP	HORSEPOWER
HVAC	HEATING, VENTILATION, AIR CONDITIONING
HWB	HOT WATER BOILER
HWP	HOT WATER PUMP
IEWH	INSTANTANEOUS ELECTRIC WATER HEATER
IH	INFRARED HEATER
IMC	INTERMEDIATE METALLIC CONDUIT
IWH	INSTANTANEOUS WATER HEATER
MAU	MAKE-UP AIR UNIT
MCC	MOTOR CONTROL CENTER
MCP	MOTOR CONTROL PROTECTOR
MM	MULTI-MODE FIBER OPTIC CABLE
MNS	MASS NOTIFICATION SYSTEM
NIC	NOT IN CONTRACT
NL	NIGHT LIGHT
NL/EL	NIGHT LIGHT AND EMERGENCY LIGHT
NTS	NOT TO SCALE
PLC	PROGRAMMABLE LOGIC CONTROLLER
PVC	POLYVINYL CHLORIDE
RCP	RADIATE CEILING PANEL
REQ'D	REQUIRED
RF	RETURN FAN
SF	SUPPLY FAN
SM	SINGLE-MODE FIBER OPTIC CABLE
SP	SUMP PUMP
SPD	SURGE PROTECTIVE DEVICE
SS	STAINLESS STEEL
TBR	TO BE REMOVED
TYP	TYPICAL
UC	UNIT COOLER
UG	UNDERGROUND
UH	UNIT HEATER
UNO	UNLESS NOTED OTHERWISE
VER	VEHICLE EXHAUST REEL
VFD	VARIABLE FREQUENCY DRIVE
WFE	WELDING FUME EXTRACTOR
WL	WET LOCATION LISTED
WP	WEATHERPROOF
3R	NEMA 3R RATING
4X	NEMA 4X RATING

GENERAL SYMBOLS

- #/E-### — DETAIL NUMBER / SHEET NUMBER

LINE TYPE KEY

- NEW WORK BY THIS CONTRACTOR (DARK SOLID LINE)
- EXISTING TO BE REMOVED BY THIS CONTRACTOR (DARK DASHED LINE)
- EXISTING TO REMAIN WORK (THIN SOLID LINE)
- NEW WORK UNDER FLOOR BY THIS CONTRACTOR
- CON — SITE UNDERGROUND CONDUIT
- //CON// — SITE REMOVED UNDERGROUND CONDUIT
- E — SITE UNDERGROUND ELECTRIC
- OHE — SITE OVERHEAD ELECTRIC
- //OHE// — SITE REMOVED OVERHEAD ELECTRIC
- //E// — SITE REMOVED UNDERGROUND ELECTRIC

US Army Corps of Engineers®

MARK	DESCRIPTION	DATE

ISSUE DATE: 05/06/2019
SOLICITATION NO.:
CONTRACT NO.:
FILE NO: 1-04-0642
FILE NAME: E-001 ELECTRICAL.dwg

DESIGNED BY: B. WINCHELL
DRAWN BY: E. DIOCSON
CHECKED BY: S. SULLIVAN
SUBMITTED BY: J. KASHIWADA
SIZE: ANSI D
SPEC NO.: 21222

U.S. ARMY CORPS OF ENGINEERS
SACRAMENTO DISTRICT

MEAD & HUNT, INC.
180 PROMENADE CIRCLE, SUITE 240
SACRAMENTO, CA 95834

AMERICAN RIVER COMMON FEATURES
NATOMAS BASIN REACH B
RIVERSIDE CANAL PHASE 2 RELOCATION PROJECT

ELECTRICAL SYMBOLS

SHEET ID
E-001

X:\1941500\161390.01\TECH\CAD\Riverside Canal\E-001.dwg

FINAL ISSUE FOR BID

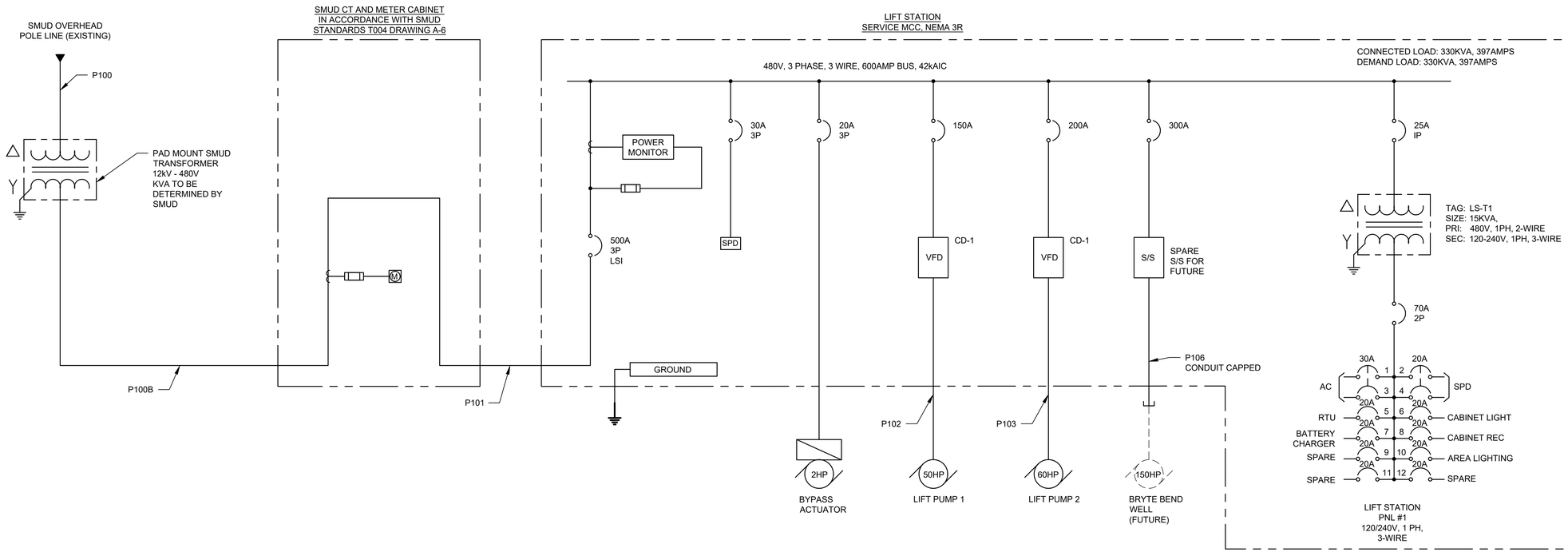

1 SINGLE LINE DIAGRAM - LIFT STATION

SCALE: NTS

X:\1941500\161390.01\TECH\CAD\Riverside Canal\E-010.dwg

FINAL ISSUE FOR BID

US Army Corps of Engineers®

MARK	DESCRIPTION	DATE

DESIGNED BY: B. WINCHELL
DRAWN BY: E. DIOCSON
CHECKED BY: S. SULLIVAN
SUBMITTED BY: J. KASHIWADA
SIZE: ANSI D
ISSUE DATE: 05/06/2013
SOLICITATION NO.:
CONTRACT NO.:
FILE NO: 1-04-0642
FILE NAME: E-010.dwg
SPEC NO: 2122

U.S. ARMY CORPS OF ENGINEERS
SACRAMENTO DISTRICT

MEAD & HUNT, INC.
180 PROMENADE CIRCLE, SUITE 240
SACRAMENTO, CA 95834

AMERICAN RIVER COMMON FEATURES
NATOMAS BASIN REACH B
RIVERSIDE CANAL PHASE 2 RELOCATION PROJECT

RIVERSIDE BASELINE
SINGLE LINE DIAGRAM

SHEET ID

E-010

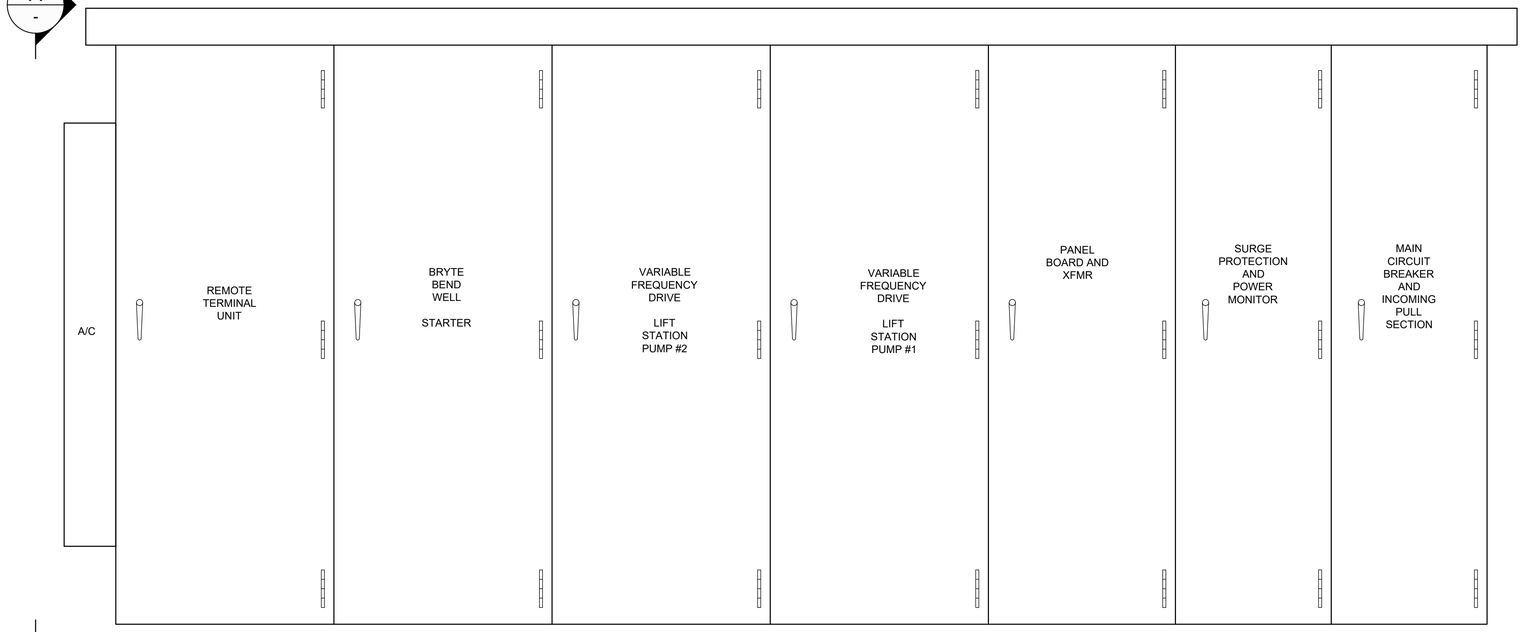

1 MOTOR CONTROL CENTER - NEMA 3R ENCLOSURE FRONT ELEVATION

SCALE: NTS

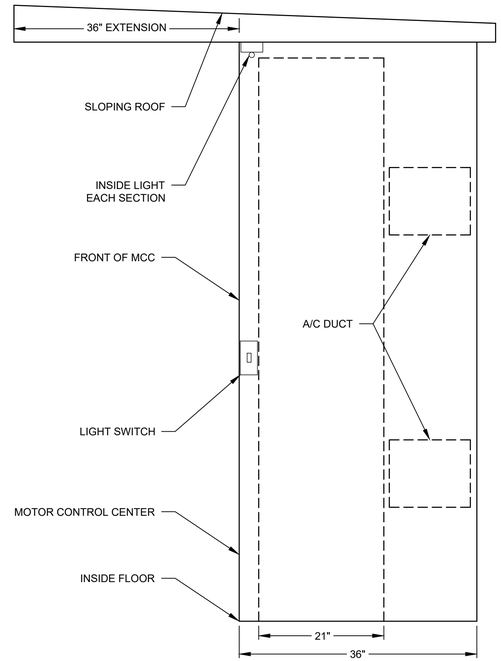

A MOTOR CONTROL CENTER NEMA 3R ENCLOSURE - SIDE ELEVATION

SCALE: NTS

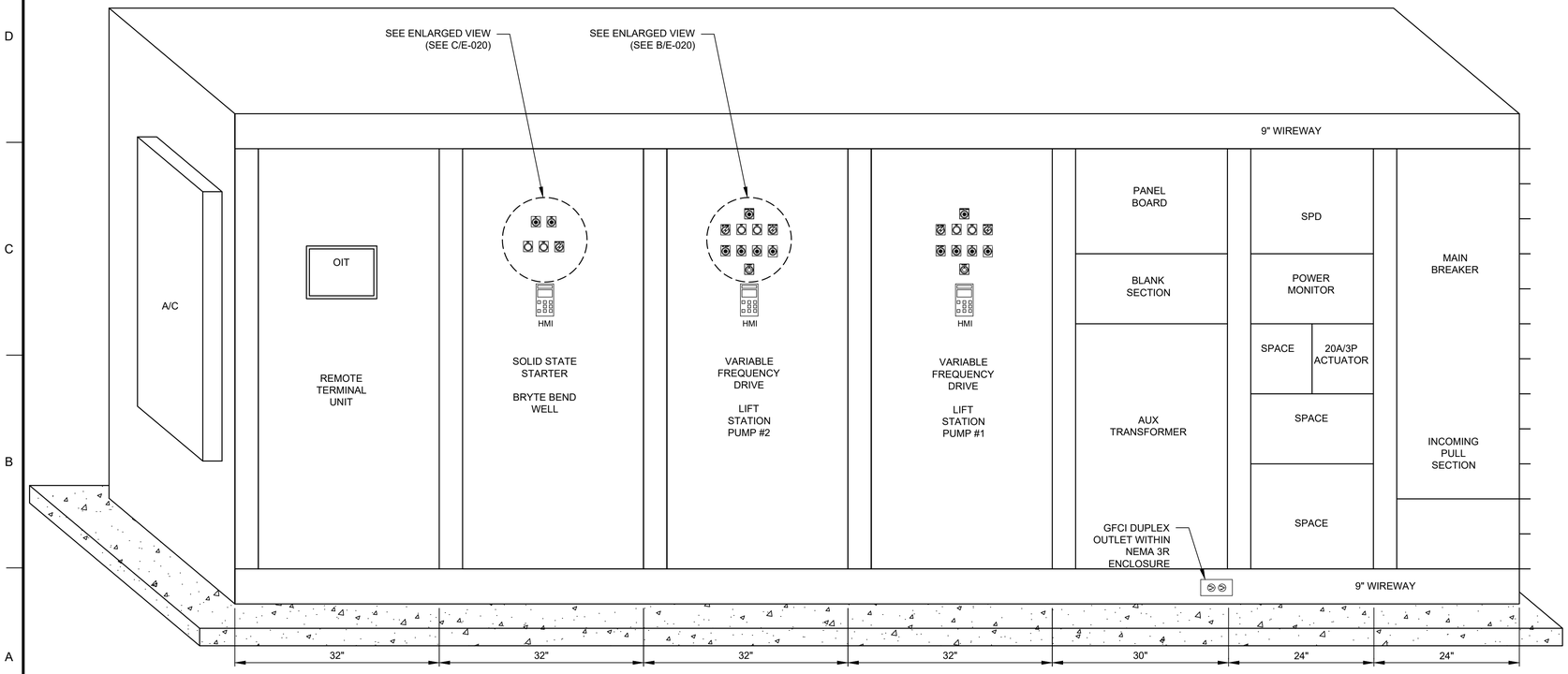

2 MOTOR CONTROL CENTER - NEMA 3R ENCLOSURE NOT SHOWN FRONT VIEW

SCALE: NTS

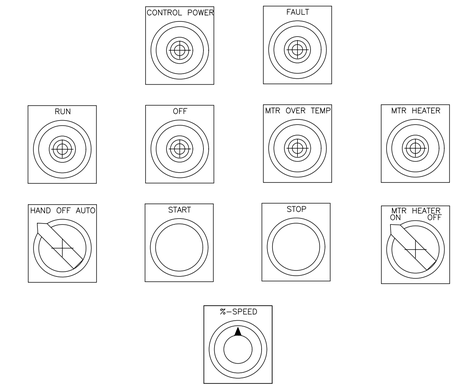

B VFD CONTROL AND INDICATION DEVICES ENLARGED VIEW

SCALE: NTS

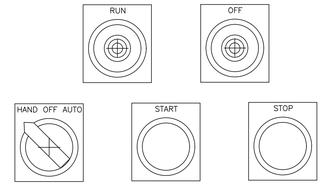

C SOLID STATE STARTER CONTROL AND INDICATION ENLARGED VIEW

SCALE: NTS

US Army Corps of Engineers®

MARK	DESCRIPTION	DATE

DESIGNED BY:	B. MICHELL
DRAWN BY:	E. DIOCSON
CHECKED BY:	S. SULLIVAN
SUBMITTED BY:	J. KASHIWADA
SIZE:	ANSI D
ISSUE DATE:	05/06/2019
SOLICITATION NO.:	
CONTRACT NO.:	
FILE NO:	1-04-0642
SPEC NO:	2122
FILE NAME:	E-020.dwg

U.S. ARMY CORPS OF ENGINEERS
SACRAMENTO DISTRICT

MEAD & HUNT, INC.
180 PROMENADE CIRCLE, SUITE 240
SACRAMENTO, CA 95834

AMERICAN RIVER COMMON FEATURES
NATOMAS BASIN REACH B
RIVERSIDE CANAL PHASE 2 RELOCATION PROJECT

LIFT STATION MCC ELEVATION

SHEET ID

E-020

X:\1941500\161390.01\TECH\CAD\Riverside Canal\E-020.dwg

FINAL ISSUE FOR BID

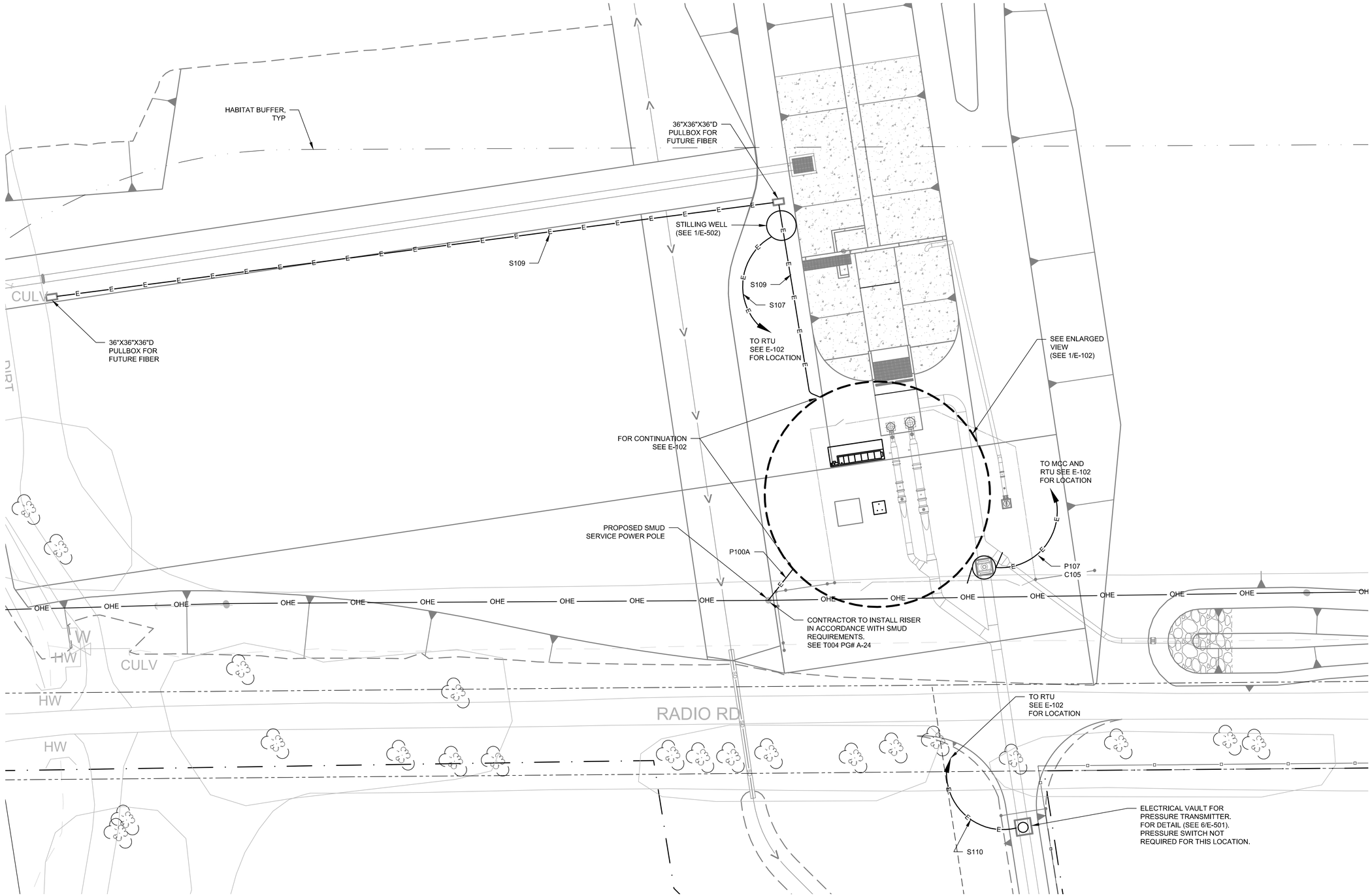

1 **PLAN VIEW**
1" = 20'
0 10 20 40

US Army Corps of Engineers®

MARK	DESCRIPTION	DATE

U.S. ARMY CORPS OF ENGINEERS
SACRAMENTO DISTRICT

MEAD & HUNT, INC.
180 PROMENADE CIRCLE, SUITE 240
SACRAMENTO, CA 95834

DESIGNED BY: B. WINCHELL
DRAWN BY: E. DIOCSON
CHECKED BY: S. SULLIVAN
SUBMITTED BY: J. KASHIWADA
SIZE: ANSI D
SPEC NO: 2122
ISSUE DATE: 05/09/2019
SOLICITATION NO.:
CONTRACT NO.:
FILE NO: 1-04-0642
FILE NAME: E-103.dwg

AMERICAN RIVER COMMON FEATURES
NATOMAS BASIN REACH B
RIVERSIDE CANAL PHASE 2 RELOCATION PROJECT

LIFT STATION

SHEET ID
E-101

X:\1941500\161390.01\TECH\CAD\Riverside Canal\E-103.dwg

FINAL ISSUE FOR BID

NO.	FROM	TO	CONDUIT SIZE	WIRE (EACH CONDUIT)		COMMENTS
				NO.	SIZE	
P100A	UTILITY OVERHEAD	UTILITY TRANSFORMER	2-4"	-	-	SMUD TO INSTALL CONDUCTORS CONTRACTOR TO INSTALL PULLROPE
				-	-	
P100B	UTILITY TRANSFORMER	UTILITY METER CABINET LIFT STATION	2-4"	-	-	CONTRACTOR TO INSTALL CONDUCTORS IN ACC. WITH SMUD REQUIREMENTS
				-	-	
P101	UTILITY METER CABINET LIFT STATION	LIFT STATION MCC	2-3"	3	250	MAIN POWER TO MCC LIFT STATION
				1	1/0	
P102	LIFT STATION MCC	LIFT PUMP 1	2"	3	4	VFD CABLE LIFT PUMP 1 POWER
				1	6	
P103	LIFT STATION MCC	LIFT PUMP 2	2"	3	3	VFD CABLE LIFT PUMP 2 POWER
				1	6	
P104	LIFTSTATION MCC PNL	EXTERIOR PHOTOCELL LIGHT	1"	2	12	EXTERIOR LIGHT FIXURE CONTROLED VIA PHOTOCELL
				1	12	
P105	LIFTSTATION MCC PNL	EXTERIOR SWITCHED LIGHT	1"	2	12	EXTERIOR LIGHT FIXURES CONTROLLED VIA LIGHT SWITCH AT MCC
				1	12	
P106	LIFTSTATION MCC PNL	BRYTE BEND WELL (FUTURE)	3"	-	-	PULLROPE SPARE FOR FUTURE
				-	-	
P107	LIFTSTATION MCC PNL	ACTUATOR	1"			POWER FOR ACTUATOR
C101	LIFT PUMP 1 VFD	LIFT PUMP 1 HIGH PRESSURE SWITCH	3/4"	2	14	PRESSURE SWITCH HIGH PUMP 1
				-	-	
C102	LIFT PUMP 2 VFD	LIFT PUMP 2 HIGH PRESSURE SWITCH	3/4"	2	14	PRESSURE SWITCH HIGH PUMP 2
				-	-	
C103	LIFT PUMP 1 VFD	LIFT PUMP 1	3/4"	6	14	LIFT PUMP 1 HTR & MOTOR TEMP DETECTION & SOLENOID VALVE
				-	-	
C104	LIFT PUMP 2 VFD	LIFT PUMP 2	3/4"	6	14	LIFT PUMP 2 HTR & MOTOR TEMP DETECTION & SOLENOID VALVE
				-	-	
C105	LIFT STATION RTU	ACTUATOR CONTROLS	3/4"	10	14	
				-	-	
C106	LIFTSTATION MCC PNL	BRYTE BEND WELL (FUTURE)	1"	-	-	PULLROPE SPARE FOR FUTURE
				-	-	
S101	LIFT STATION RTU	FLOW TRANSDUCER 100	1"	-	-	MANUFACTURED CABLE
				-	-	
S102	LIFT STATION RTU	FLOW TRANSDUCER 200	1"	-	-	MANUFACTURED CABLE
				-	-	
S103	LIFT STATION RTU	PRESSURE TRANSMITTER PT100	1"	1	TSP	PRESSURE IN PUMP 1 PIPE
				-	-	
S104	LIFT STATION RTU	PRESSURE TRANSMITTER PT200	1"	1	TSP	PRESSURE IN PUMP 2 PIPE
				-	-	
S105	LIFT STATION RTU	PRESSURE TRANSMITTER LT002	1"	1	TSP	LEVEL TRANSMITTER USED FOR DIFFERENTIAL ON RACK
				-	-	
S106	LIFT STATION RTU	PRESSURE TRANSMITTER LT003	1"	1	TSP	LEVEL TRANSMITTER USED FOR DIFFERENTIAL ON RACK
				-	-	
S107	LIFT STATION RTU	PRESSURE TRANSMITTER LT001	1"	1	TSP	LEVEL TRANSMITTER IN CANAL
				-	-	
S108	LIFT STATION RTU	ANTENNA	1"	-	-	CONTRACTOR TO PROVIDE MANUFACTURED CABLE
				-	-	
S109	LIFT STATION RTU	FUTURE CONNECTION TO RIVERSIDE PLC	2-1"	-	-	PULLROPE
				-	-	
S110	LIFT STATION RTU	PRESURE TRANSMITTER PT001	1"	1	TSP	PRESSURE TRANSMITTER IN MAIN PIPE
				-	-	

A CONDUIT AND CIRCUIT SCHEDULE

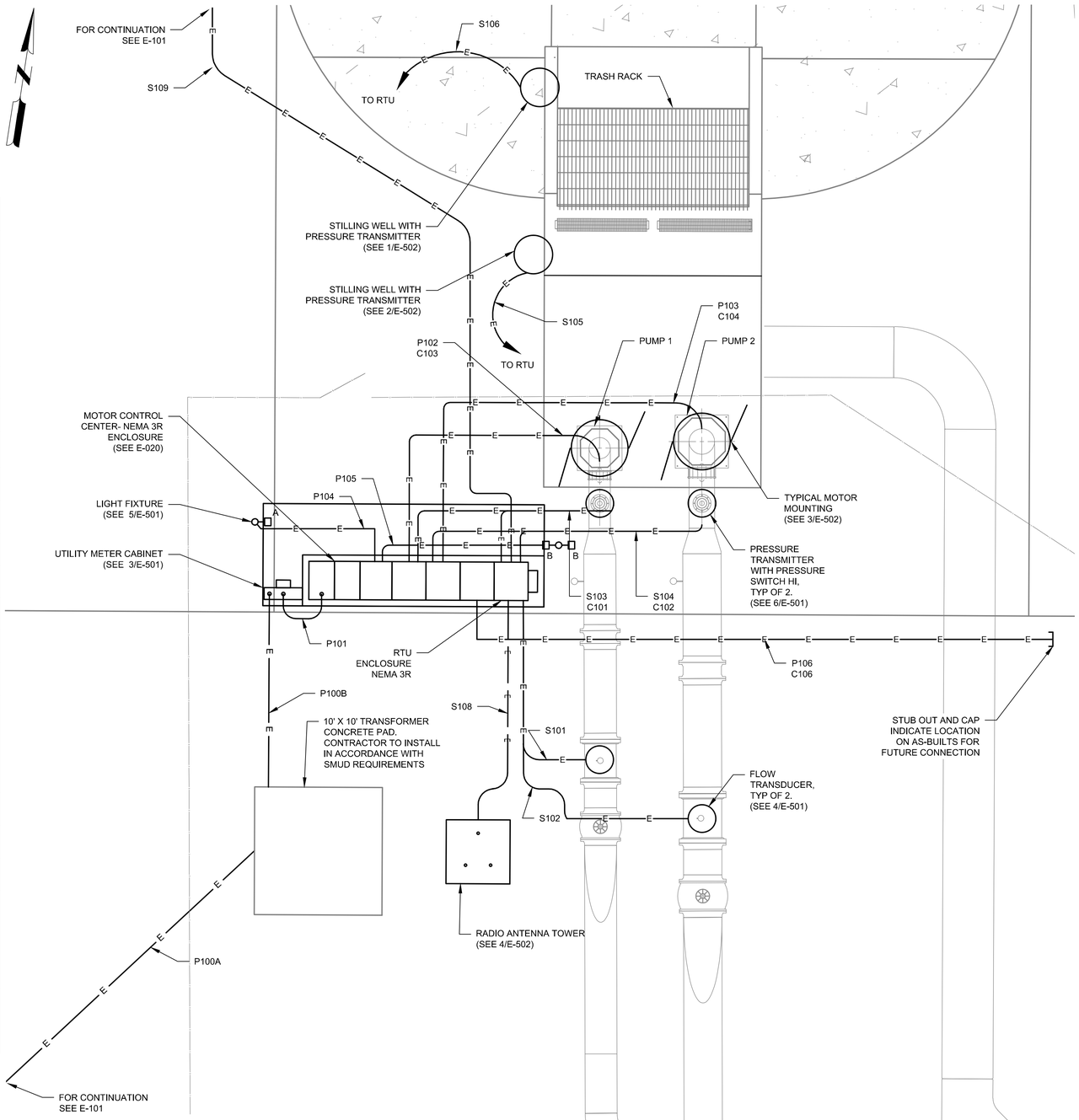

GENERAL NOTES:

1. SEE SHEET E-001 FOR ELECTRICAL SYMBOLS AND ABBREVIATIONS.
2. SEE E-010 FOR SINGLE LINE DIAGRAM.
3. LIGHT POLES ARE FED FROM MCC POWER PANEL. FIXTURE TYPE A IS TO BE CONTROLLED VIA PHOTOCELL ON THE FIXTURE. FIXTURE TYPE B ARE CONTROLLED VIA A LIGHT SWITCH LOCATED IN THE MCC NEMA 3R ENCLOSURE. CONTRACTOR TO LOCATE SWITCH NEXT THE MCC LIGHT SWITCH.

1 ENLARGED VIEW

1" = 5'

0 2.5 5 10

US Army Corps of Engineers®

MARK	DESCRIPTION	DATE

DESIGNED BY: B. WINCHELL
DRAWN BY: E. DIOCSON
CHECKED BY: S. SULLIVAN
SUBMITTED BY: J. KASHIWADA
SIZE: ANSI D
ISSUE DATE: 05/06/2013
SOLICITATION NO.:
CONTRACT NO.:
FILE NO: 1-04-0642
FILE NAME: E-103.dwg
SPEC NO: 21222

U.S. ARMY CORPS OF ENGINEERS
SACRAMENTO DISTRICT

MEAD & HUNT, INC.
180 PROMENADE CIRCLE, SUITE 240
SACRAMENTO, CA 95834

AMERICAN RIVER COMMON FEATURES
NATOMAS BASIN REACH B
RIVERSIDE CANAL PHASE 2 RELOCATION PROJECT

ENLARGED PLAN

SHEET ID
E-102

X:\19941500\161390.01\TECH\CAD\Riverside Canal\E-103.dwg

FINAL ISSUE FOR BID

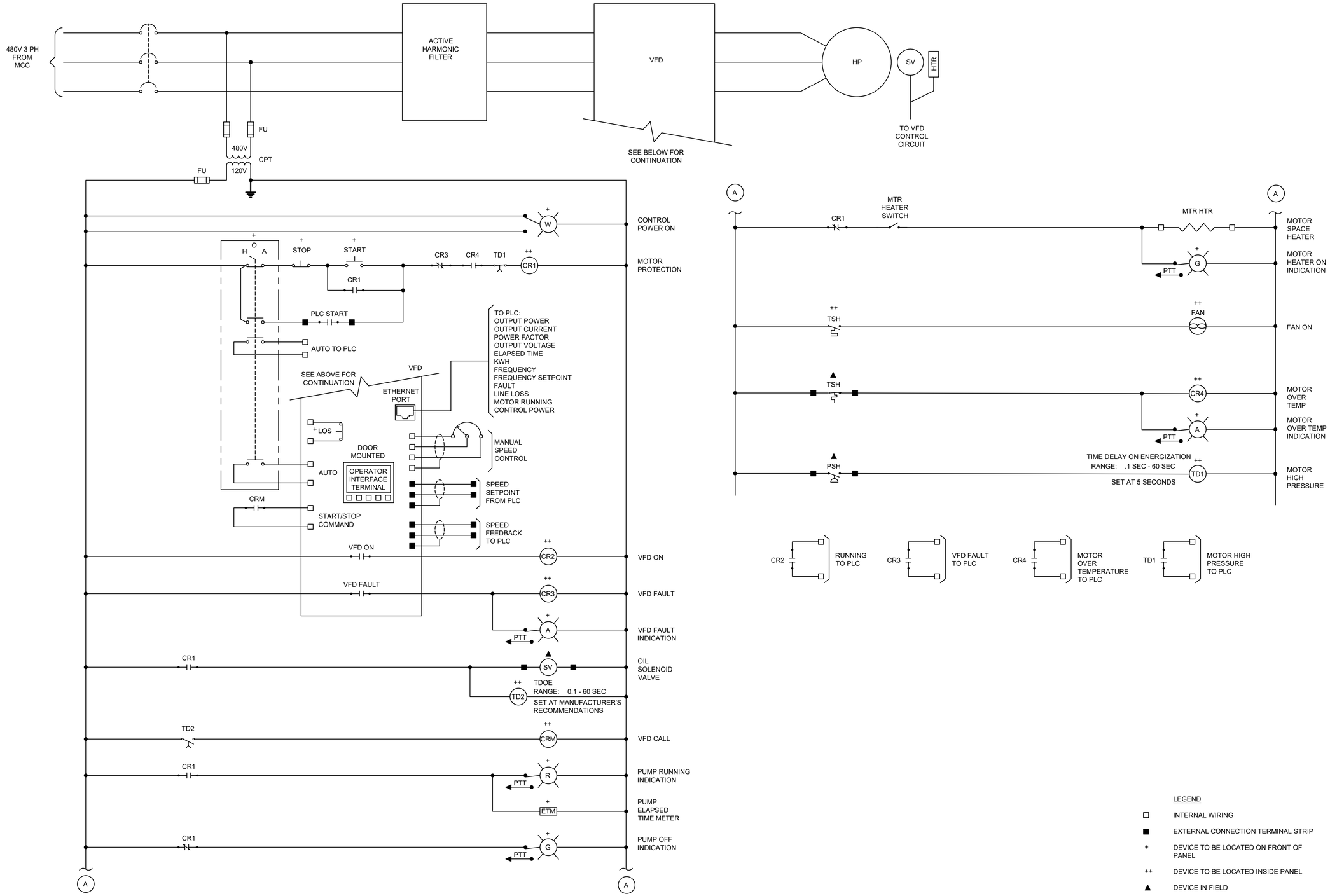

1 CD-1 PUMP CONTROL DIAGRAM

SCALE: NTS FOR LIFT STATION PUMPS

US Army Corps of Engineers®

MARK	DESCRIPTION	DATE

DESIGNED BY: B. WINCHELL
DRAWN BY: E. DIOCSON
CHECKED BY: S. SULLIVAN
SUBMITTED BY: J. KASHIWADA
ISSUE DATE: 05/06/13
SOLICITATION NO.:
CONTRACT NO.:
FILE NO: 1-04-0642
FILE NAME: E-300 CONTROL.dwg
SIZE: ANSI D
SPEC NO: 2122

U.S. ARMY CORPS OF ENGINEERS
SACRAMENTO DISTRICT

MEAD & HUNT, INC.
180 PROMENADE CIRCLE, SUITE 240
SACRAMENTO, CA 95834

AMERICAN RIVER COMMON FEATURES
NATOMAS BASIN REACH B
RIVERSIDE CANAL PHASE 2 RELOCATION PROJECT

CONTROL DIAGRAM LIFT STATION

SHEET ID
E-301

X:\19941500\161390.01\TECH\CAD\Riverside Canal\E-300.dwg

FINAL ISSUE FOR BID

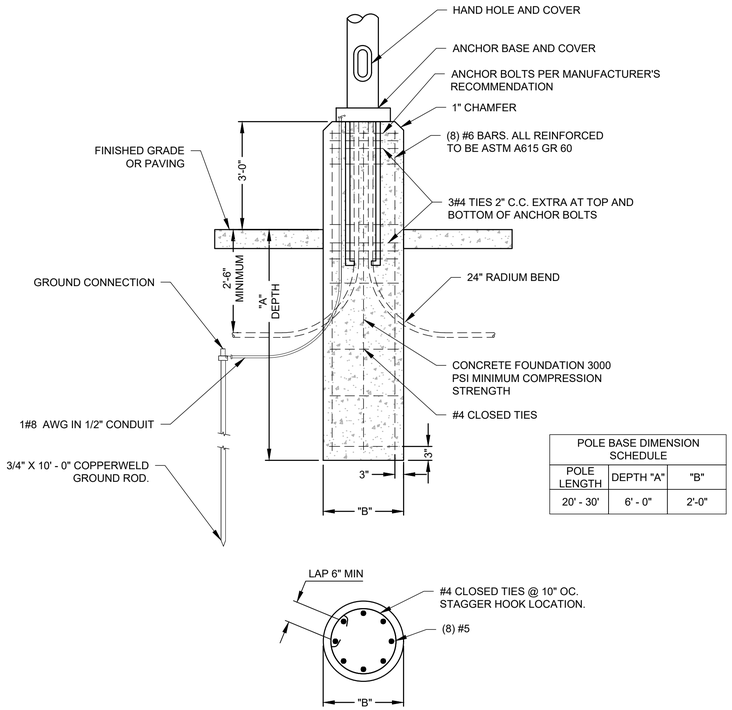

POLE BASE DIMENSION SCHEDULE		
POLE LENGTH	DEPTH "A"	"B"
20' - 30'	6' - 0"	2'-0"

NOTES:
1. SEE 1/S-501 FOR TYPICAL BASE PREPARATION BELOW FOOTING.

5 LIGHT POLE BASE DETAIL
NTS

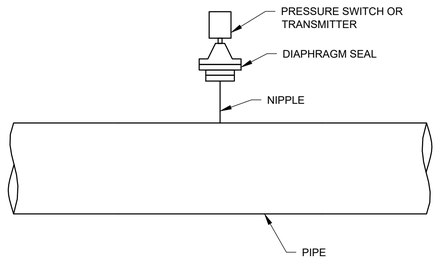

6 INLINE ISOLATION PRESSURE SWITCH/TRANSMITTER
NTS

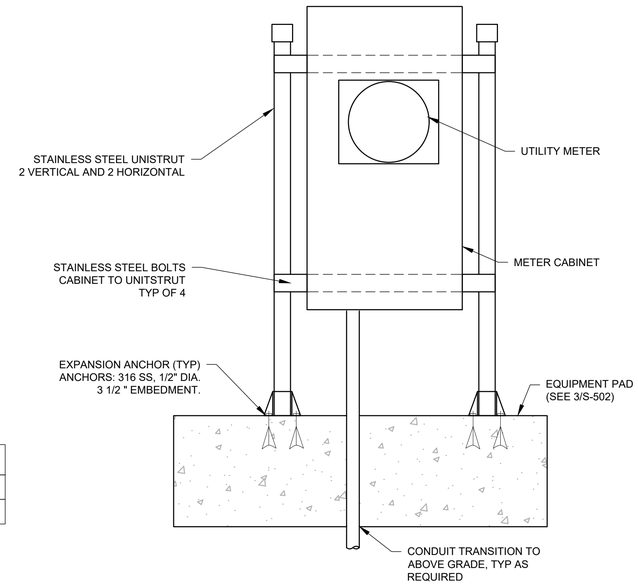

FRONT VIEW

NOTES:
1. SEE 1/S-501 FOR TYPICAL BASE PREPARATION BELOW FOOTING.

3 UTILITY METER MOUNTING
NTS

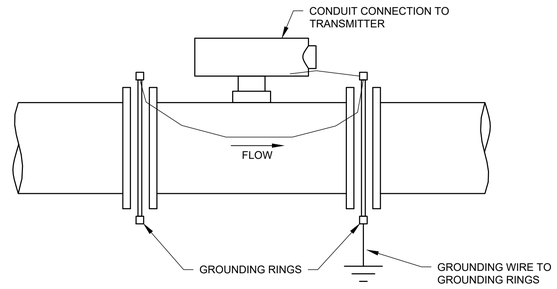

NOTES:
1. MINIMUM OF 10 PIPE DIAMETERS UPSTREAM.
2. MINIMUM OF 5 PIPE DIAMETERS DOWNSTREAM.

4 ELECTROMAGNETIC FLOWMETER INLINE MOUNTED
NTS

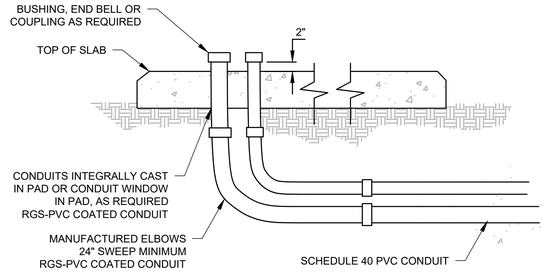

NOTES:
1. SEE DUCTBANK SECTION FOR ADDITIONAL REQUIREMENTS.
2. SEE OTHER CONTRACT DRAWING FOR PAD REQUIREMENTS.

1 CONDUIT TRANSITION TO ABOVE GRADE (EXTERIOR)
NTS

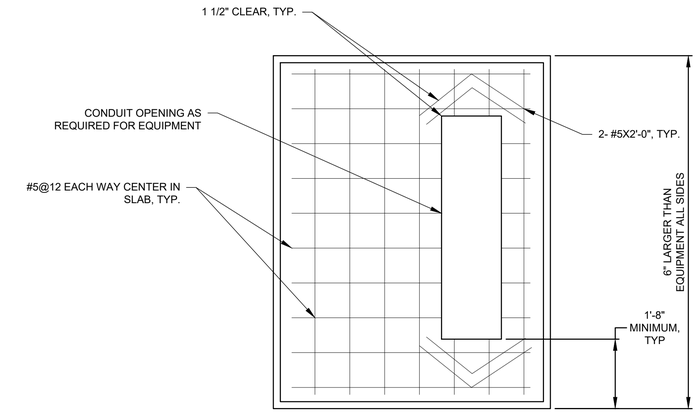

PLAN

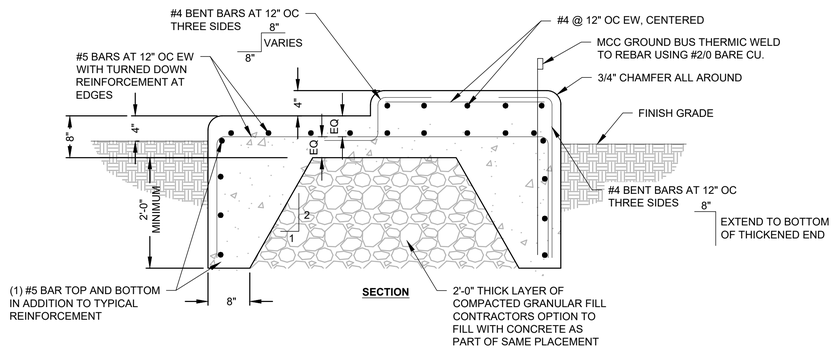

SECTION

NOTES:
1. SEE 1/S-501 FOR TYPICAL BASE PREPARATION BELOW FOOTING.

2 REINFORCED CONCRETE PAD FOR OUTDOOR ELECTRICAL EQUIPMENT
NTS

US Army Corps of Engineers®

MARK	DESCRIPTION	DATE

DESIGNED BY: B. WINCHELL
DRAWN BY: E. DIOCSON
CHECKED BY: S. SULLIVAN
SUBMITTED BY: J. KASHIWADA
SIZE: ANSI D
ISSUE DATE: 05/06/2019
SOLICITATION NO.:
CONTRACT NO.:
FILE NO: 1-04-0642
SPEC NO: 21222
FILE NAME: E-501 ELECTRICAL.dwg

U.S. ARMY CORPS OF ENGINEERS
SACRAMENTO DISTRICT

MEAD & HUNT, INC.
180 PROMENADE CIRCLE, SUITE 240
SACRAMENTO, CA 95834

AMERICAN RIVER COMMON FEATURES
NATOMAS BASIN REACH B
RIVERSIDE CANAL PHASE 2 RELOCATION PROJECT

TYPICAL DETAILS

SHEET ID
E-501

X:\1941500\161390.01\TECH\CAD\Riverside Canal\E-501.dwg

FINAL ISSUE FOR BID

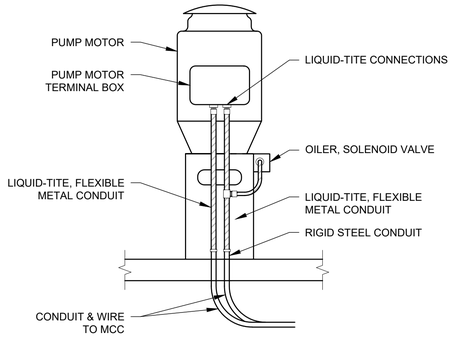

3 VERTICAL PUMP MOTOR TERMINATIONS - TYPICAL INSTALLATION

NTS

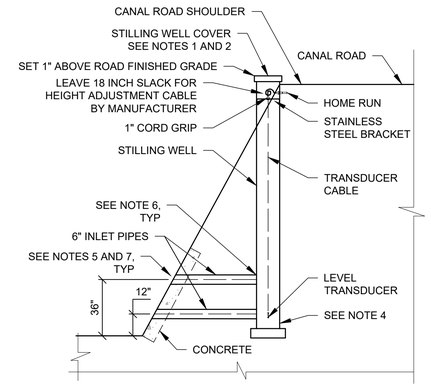

NOTES:
1. STILLING WELL COVER, FABRICATE FROM 1/4" PLATE, CLEAN, PRIME AND APPLY TWO COATS OF EPOXY GRAY PAINT. USE 1/4"X1" BAR, SLOT AND PIPE, INSERT THROUGH COVER AND PIPE TO LOCK COVER IN PLACE WITH PADLOCK.
2. ONE (1) INCH INSULATING BOARD APPLIED TO BOTTOM OF COVER.
3. FIELD MEASURE DISTANCE FROM TIP OF SENSOR TO BOTTOM OF STILLING WELL WITH ACCURACY OF 0.1 OF AN INCH AND FURNISH TO ENGINEER. RECORD ELEVATION OF BOTTOM OF CANAL AND BOTTOM OF STILLING WELL AND FURNISH TO ENGINEER.
4. 24" SCHEDULE 80 PVC PIPE W/ CONCRETE BASE. SET AT LEAST 3" INTO CONCRETE BASE.
5. FINISH 6" INLET PIPES FLUSH WITH SURFACE OF CANAL SLOPE.
6. USE 6"X24" SADDLE FOR CONNECTING 6" PIPE TO 24" PIPE.
7. 6" SCHEDULE 80 PVC PIPE. PLACE 6" DEEP CONCRETE AT LEAST FOUR FEET AROUND INLET PIPE FLUSH WITH EDGE OF PIPE.

1 LEVEL TRANSDUCER INSTALLATION IN CANAL EMBANKMENT

NTS

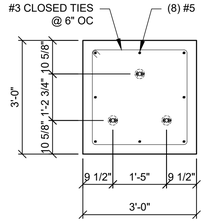

A PLAN

1/2"=1'-0"

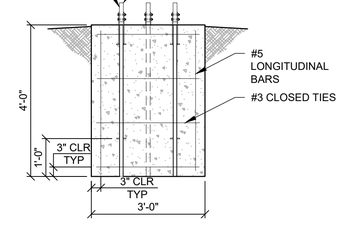

B ELEVATION

1/2"=1'-0"

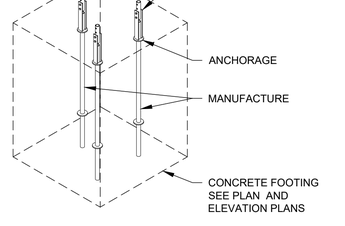

C ISOMETRIC

1/2"=1'-0"

NOTES:
1. SEE 1/S-501 FOR TYPICAL BASE PREPARATION BELOW FOOTING.

4 ANTENNA FOOTING DETAIL

NTS

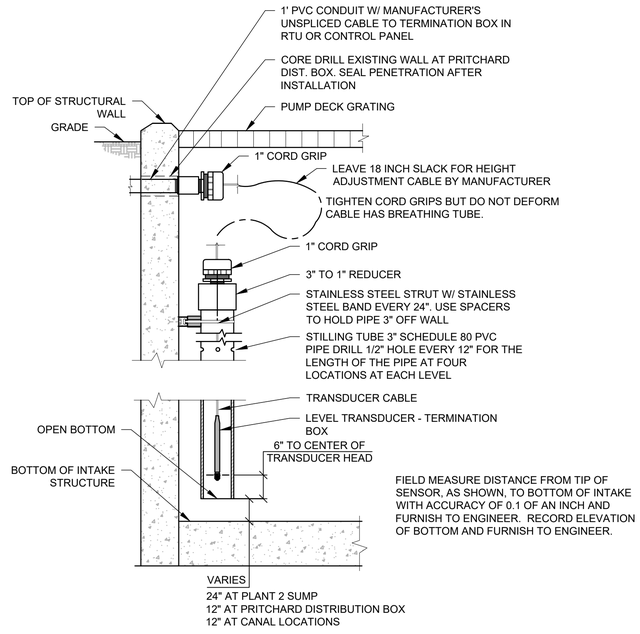

2 LEVEL TRANSDUCER INSTALLATION IN STRUCTURE

NTS

US Army Corps of Engineers®

MARK	DESCRIPTION	DATE

ISSUE DATE: 05/06/2019
SOLICITATION NO.:
CONTRACT NO.:
FILE NO: 1-04-0642
FILE NAME: E-501 ELECTRICAL.dwg

DESIGNED BY: B. WINCHELL
DRAWN BY: E. DIOCSON
CHECKED BY: S. SULLIVAN
SUBMITTED BY: J. KASHIWADA
SIZE: ANSI D
SPEC NO: 2122

U.S. ARMY CORPS OF ENGINEERS
SACRAMENTO DISTRICT

MEAD & HUNT, INC.
180 PROMENADE CIRCLE, SUITE 240
SACRAMENTO, CA 95834

AMERICAN RIVER COMMON FEATURES
NATOMAS BASIN REACH B
RIVERSIDE CANAL PHASE 2 RELOCATION PROJECT

TYPICAL DETAILS

SHEET ID
E-502

X:\19941500\161390.01\TECH\CAD\Riverside Canal\E-501.dwg

FINAL ISSUE FOR BID

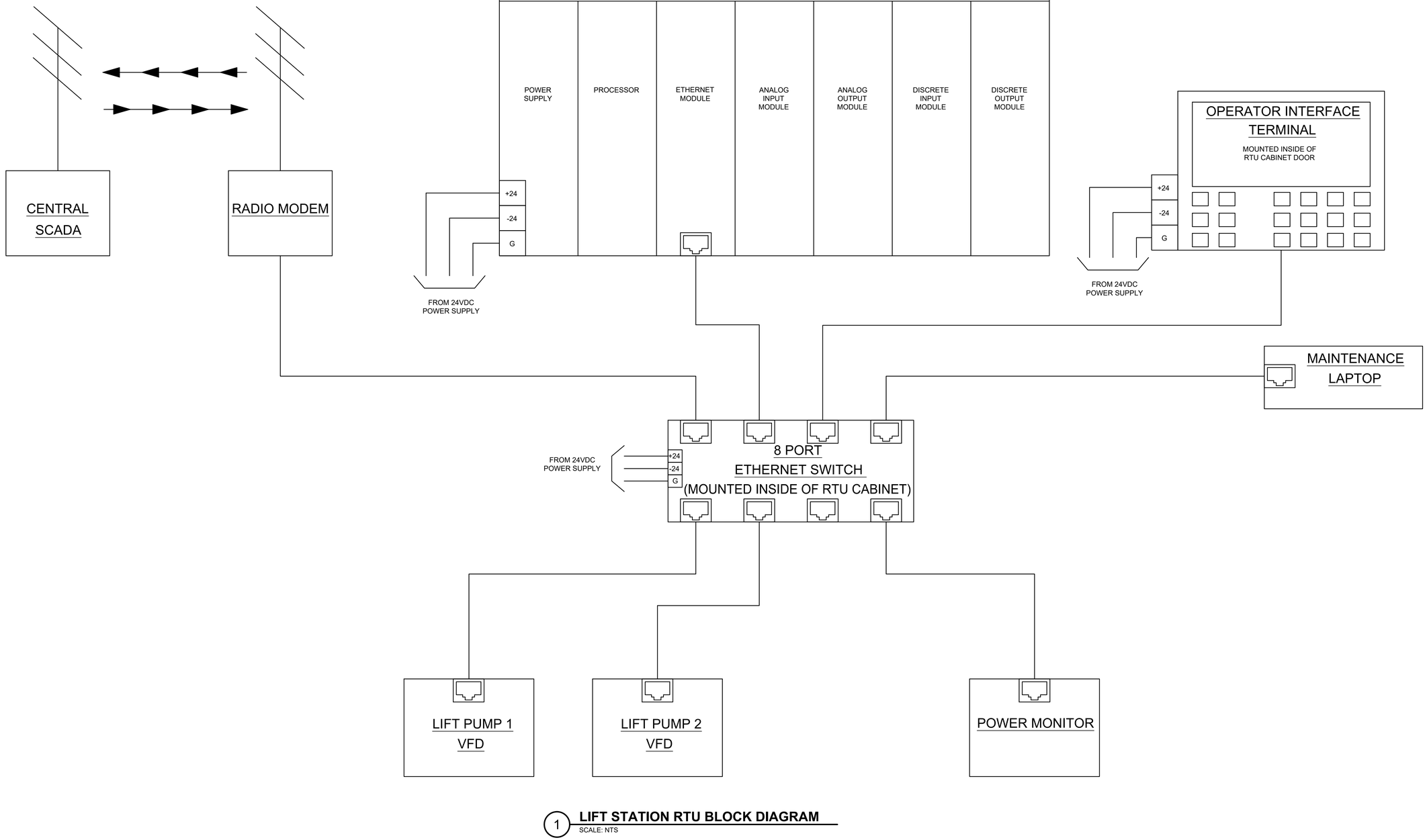

1 **LIFT STATION RTU BLOCK DIAGRAM**
SCALE: NTS

US Army Corps of Engineers®

MARK	DESCRIPTION	DATE

DESIGNED BY: B. MINCHELL
DRAWN BY: E. DIOCSON
CHECKED BY: S. SULLIVAN
SUBMITTED BY: J. KASHIWADA
SIZE: ANSI D
ISSUE DATE: 05/06/2019
SOLICITATION NO.:
CONTRACT NO.:
FILE NO: 1-04-0642
FILE NAME: E-602.dwg
SPEC NO: 21222

U.S. ARMY CORPS OF ENGINEERS
SACRAMENTO DISTRICT

MEAD & HUNT, INC.
180 PROMENADE CIRCLE, SUITE 240
SACRAMENTO, CA 95834

AMERICAN RIVER COMMON FEATURES
NATOMAS BASIN REACH B
RIVERSIDE CANAL PHASE 2 RELOCATION PROJECT

LIFT STATION RTU BLOCK DIAGRAM

SHEET ID
E-601

X:\19415001\161390.01\TECH\CAD\Riverside Canal\E-602.dwg

FINAL ISSUE FOR BID

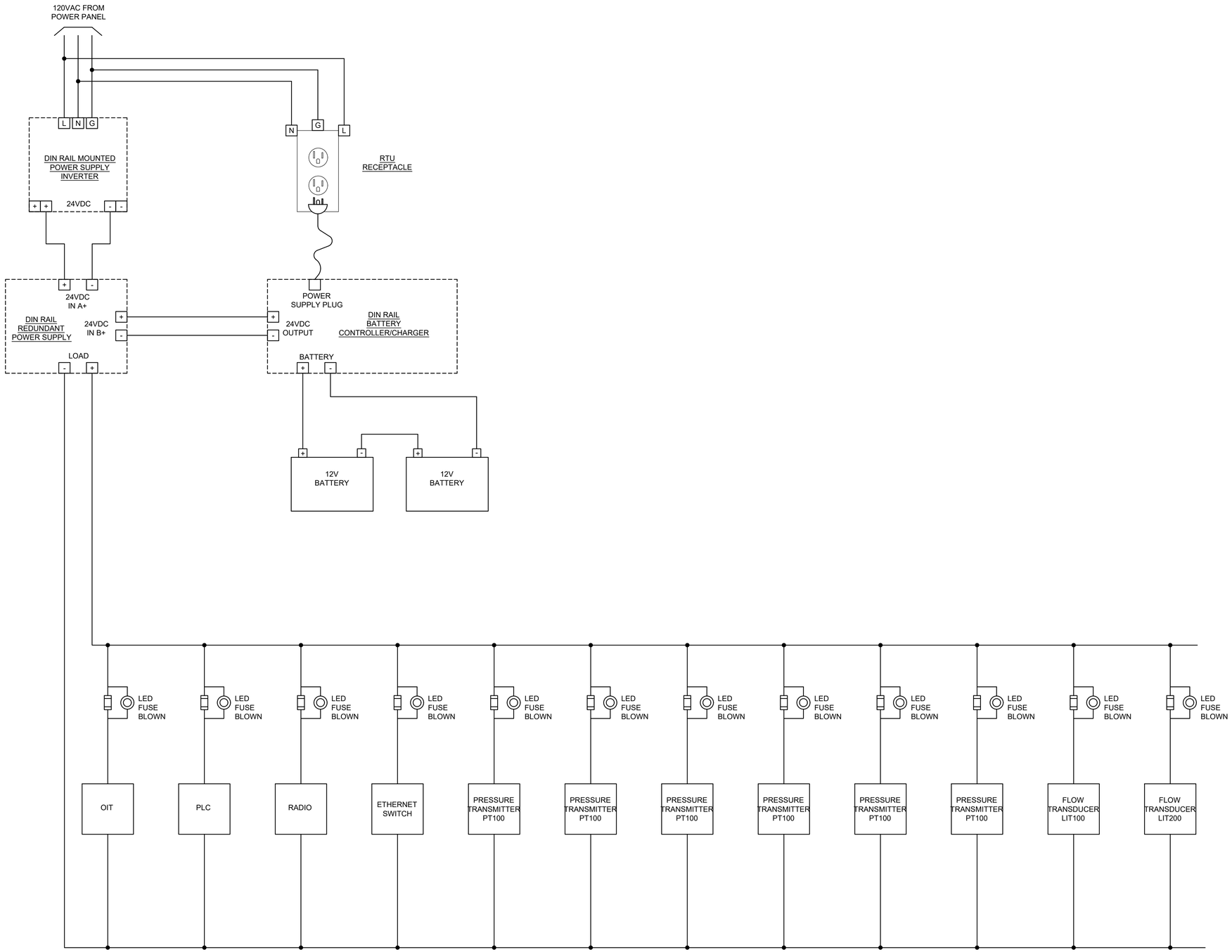

1 **LOCAL CONTROL PANEL DC POWER DISTRIBUTION**
LIFT STATION PLC
SCALE: NTS

US Army Corps of Engineers®

MARK	DESCRIPTION	DATE

DESIGNED BY: B. WINCHELL
DRAWN BY: E. DIOCSON
CHECKED BY: S. SULLIVAN
SUBMITTED BY: J. KASHIWADA
ISSUE DATE: 05/06/2019
SOLICITATION NO.:
CONTRACT NO.:
FILE NO: 1-04-0842
FILE NAME: E-602.dwg
SIZE: ANSI D
SPEC NO: 2122

U.S. ARMY CORPS OF ENGINEERS
SACRAMENTO DISTRICT

MEAD & HUNT, INC.
180 PROMENADE CIRCLE, SUITE 240
SACRAMENTO, CA 95834

AMERICAN RIVER COMMON FEATURES
NATOMAS BASIN REACH B
RIVERSIDE CANAL PHASE 2 RELOCATION PROJECT

LIFT STATION RTU POWER DISTRIBUTION

SHEET ID
E-602

X:\19941500\161390.01\TECH\CAD\Riverside Canal\E-602.dwg

FINAL ISSUE FOR BID

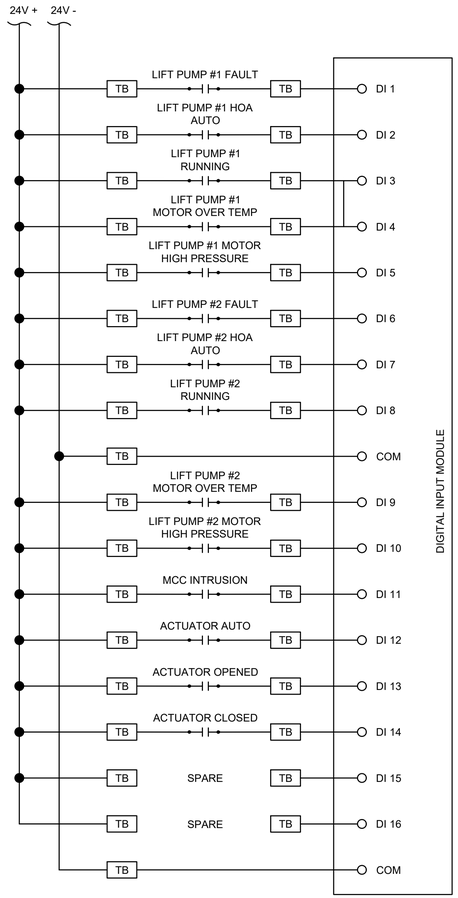

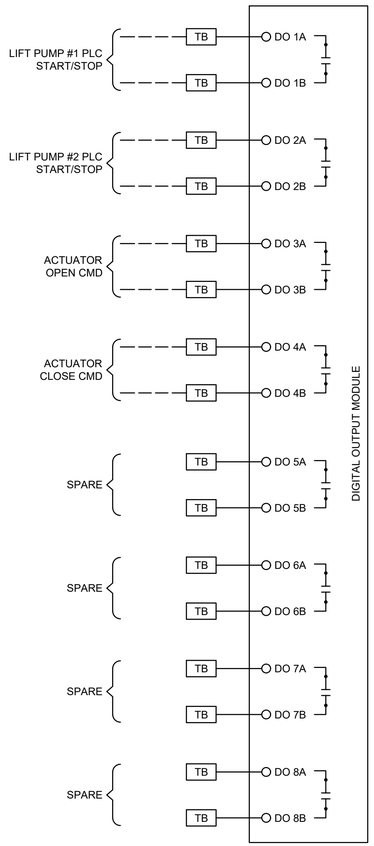

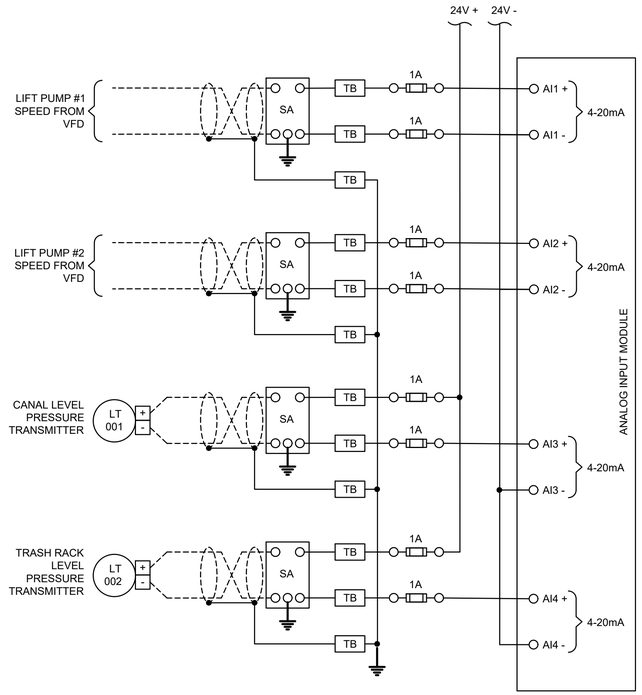

1 LIFT STATION PLC I/O MODULES

SCALE: NTS

US Army Corps of Engineers®

MARK	DESCRIPTION	DATE

DESIGNED BY: B. WINCHELL
DRAWN BY: E. DIOCSON
CHECKED BY: S. SULLIVAN
SUBMITTED BY: J. KASHIWADA
SIZE: ANSI D
ISSUE DATE: 05/06/2019
SOLICITATION NO.:
CONTRACT NO.:
FILE NO: 1-04-0842
FILE NAME: E-602.dwg
SPEC NO: 2122

U.S. ARMY CORPS OF ENGINEERS
SACRAMENTO DISTRICT

MEAD & HUNT, INC.
180 PROMENADE CIRCLE, SUITE 240
SACRAMENTO, CA 95834

AMERICAN RIVER COMMON FEATURES
NATOMAS BASIN REACH B
RIVERSIDE CANAL PHASE 2 RELOCATION PROJECT

LIFT STATION PLC IO 1

SHEET ID

E-603

X:\19415001\161390.01\TECH\CAD\Riverside Canal\E-602.dwg

FINAL ISSUE FOR BID

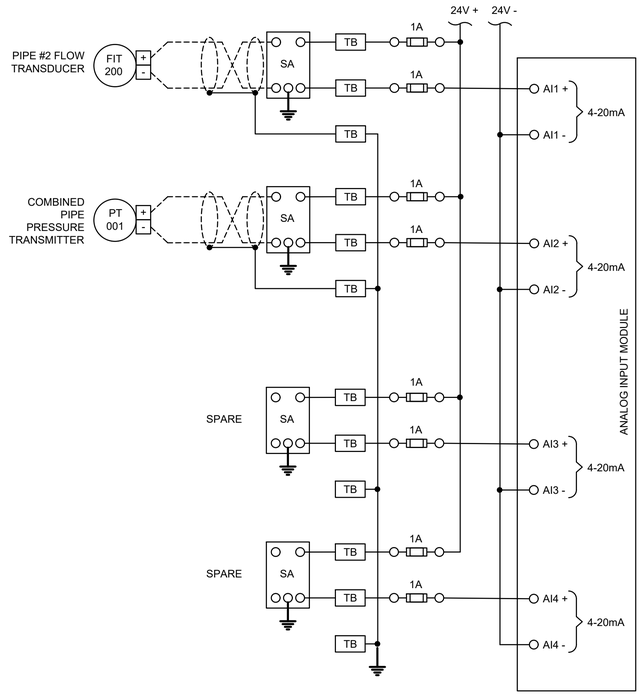

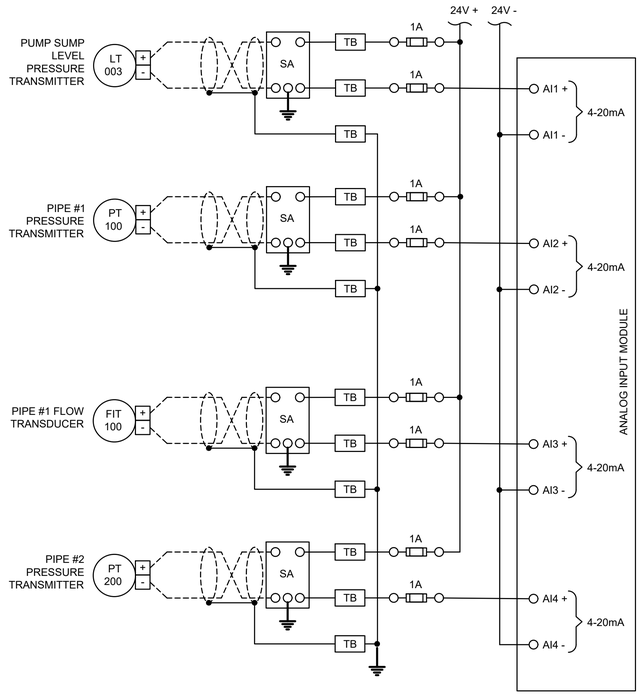

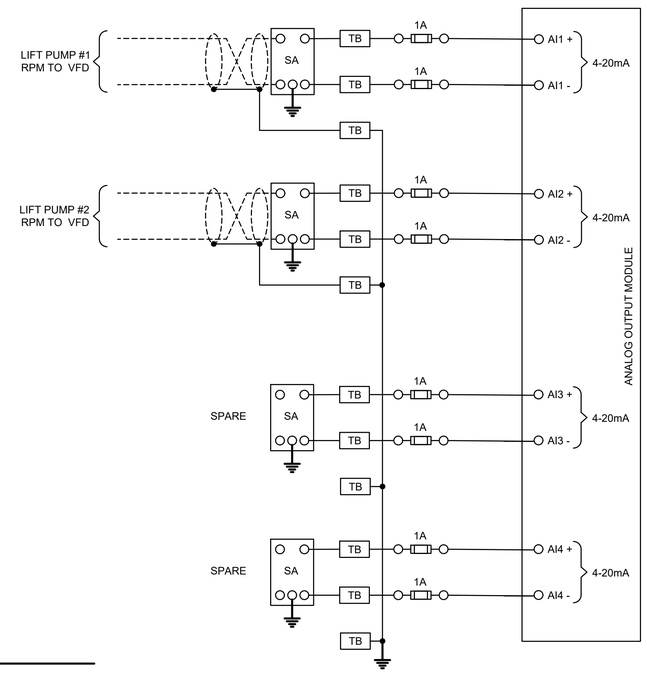

1 LIFT STATION PLC I/O MODULES

SCALE: NTS

US Army Corps of Engineers®

MARK	DESCRIPTION	DATE

DESIGNED BY: B. WINCHELL
DRAWN BY: E. DIOCSON
CHECKED BY: S. SULLIVAN
SUBMITTED BY: J. KASHIWADA
SIZE: ANSI D
ISSUE DATE: 05/06/2019
SOLICITATION NO.:
CONTRACT NO.:
FILE NO: T-04-0642
FILE NAME: E-602.dwg
SPEC NO: 2122

U.S. ARMY CORPS OF ENGINEERS
SACRAMENTO DISTRICT

MEAD & HUNT, INC.
180 PROMENADE CIRCLE, SUITE 240
SACRAMENTO, CA 95834

AMERICAN RIVER COMMON FEATURES
NATOMAS BASIN REACH B
RIVERSIDE CANAL PHASE 2 RELOCATION PROJECT

LIFT STATION PLC IO 2

SHEET ID

E-604

X:\19415001\161390.01\TECH\CAD\Riverside Canal\E-602.dwg

FINAL ISSUE FOR BID

INSTRUMENTATION & CONTROL SYMBOL SCHEDULE

INSTRUMENT IDENTIFICATION MATRIX					
	FIRST LETTER		SUCCEEDING LETTERS		
	MEASUREMENT	MODIFIER	READOUT OR PASSIVE FUNCTION	OUTPUT FUNCTION	MODIFIER
A	ANALYSIS		ALARM		
B	BURNER				
C	CONDUCTIVITY			CONTROL	CLOSE / CLOSED
D	DENSITY / S.G.	DIFFERENTIAL			
E	VOLTAGE		PRIMARY ELEMENT		
F	FLOW RATE	RATIO (FRACTION)			
G			GLASS / GAUGE		
H	HAND (MANUAL)				HIGH
I	CURRENT		INDICATION		
J	POWER	SCAN			
K	TIME	TIME / RATE OF CHANGE		CONTROL STATION	
L	LEVEL		LIGHT		LOW
M	MOISTURE	MOMENTARY			MIDDLE
N	TORQUE				
O			ORIFICE		OPEN / OPENED
P	PRESSURE		TEST POINT		
Q	QUANTITY	INTEGRATE / TOTALIZE			MULTIFUNCTION
R	RADIATION		RECORD	REPORT	RUN / RUNNING
S	SPEED / FREQUENCY	SAFETY		SWITCH	
T	TEMPERATURE			TRANSMITTER	
U	MULTIVARIABLE		MULTIFUNCTION	MULTIFUNCTION	MULTIFUNCTION
V	VIBRATION			VALVE	
W	WEIGHT / FORCE		WELL		
X	FAILURE / TROUBLE	X-AXIS			
Y	EVENT / STATUS	Y-AXIS		RELAY, COMPUTE, CONVERT	
Z	POSITION	Z-AXIS		DRIVE, ACTUATE, FINAL CONTROL ELEMENT	

PROCESS EQUIPMENT

- CENTRIFUGAL PUMP
- SUBMERSIBLE PUMP
- VERTICAL TANK
- PERISTALTIC PUMP
- ROTARY LOBE PUMP
- VERTICAL TURBINE PUMP
- BLOWER
- MIXER
- METERING PUMP
- HORIZONTAL TANK

ACTUATOR CONTROL STATION

ACS — CONTROL STATION SYMBOL USED WITH REMOTE TYPE AND INCLUDED THE FOLLOWING FUNCTIONS

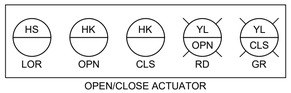

OPEN/CLOSE ACTUATOR

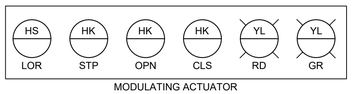

MODULATING ACTUATOR

GENERAL SYMBOLS

- YY / XXXX — DISCRETE INSTRUMENT - FIELD MOUNTED
  YY = INSTRUMENT IDENTIFCATION
  xxxx = LOOP NUMBER
- YY / XXXX — DISCRETE INSTRUMENT - PRIMARY LOCATION
- YY / XXXX — DISCRETE INSTRUMENT - AUXILIARY LOCATION
- YY / XXXX, YY / XXXX — INSTRUMENTS SHARING A COMMON HOUSING
- 1 — CONTROL INTERLOCK (HARDWIRE)
- CS / 1 — CONTROL SEQUENCE OF OPERATIONS FOR EQUIPMENT AS DETAILED IN THE SPECIFICATIONS
- YY / XXXX — I/O POINT FOR SHARED CONTROL & DISPLAY IN SCADA/DCS
- PILOT LIGHT
- M — MOTOR

FLOW METERS

- FE / XXXX — ORIFICE PLATE
- FE / XXXX — ULTRASONIC
- FE / XXXX / M — MAGNETIC
- FE / XXXX — VENTURI
- FE / XXXX — TURBINE
- FE / XXXX — PARSHALL FLUME
- FE / XXXX — VORTEX
- FE / XXXX — WEIR
- FE / XXXX — ROTAMETER

CONTROL STATIONS

HS / YYY — SELECTOR SWITCH, YYY = FUNCTION DESCRIPTION

FOR	FORWARD-OFF-REVERSE
FOJR	FORWARD-OFF-JOG REVERSE
HOA	HAND-OFF-AUTO
HOR	HAND-OFF-REMOTE
HOSB	HAND-OFF-STANDBY
LOR	LOCAL-OFF-REMOTE
KYPD	KEYPAD
MOA	MANUAL-OFF-AUTO
OC	OPEN-CLOSE
OCR	OPEN-CLOSE-REMOTE
OO	ON-OFF
OSC	OPEN-STOP-CLOSE
RO	RUN-OFF
TOD	TRANSFER-OFF-DILUTION

HK / YYY — PUSH BUTTON, YYY = FUNCTION DESCRIPTION

CLS	CLOSE
ESTOP	EMERGENCY STOP
LT	LAMP TEST
OPN	OPEN
RS	RESET FAULT
SIL	SILENCE ALARM
STR	START
STP	STOP
STPL	STOP WITH LOCOUT

- SK — SPEED CONTROL POTENTIOMETER
- YY / YL — INDICATING LIGHT, YY = COLOR CODE

GR	GREEN (OFF, STOP, CLOSED)
RD	RED (RUN, START, OPEN)
WH	WHITE (POWER ON)
BL	BLUE (STATUS)
AM	AMBER (ALARM CONDITION)

- YY / YL — STROBE LIGHT, YY = COLOR CODE
- ELECTRONIC HORN

VALVES

- GATE
- PLUG
- GLOBE
- BALL
- BUTTERFLY
- 3-WAY
- 4-WAY
- CHECK
- DIAPHRAGM
- PINCH
- NEEDLE
- ANGLE
- S — SOLENOID
- M — MOTOR OPERATED
- PNEUMATIC OPERATED
- PRESSURE REGULATING
- PRESSURE SUSTAINING
- HYDRAULIC OPERATED
- AIR RELEASE (AR)
- AIR/VACUUM (AV)
- COMBINATION (CAV)
- SLIDE GATE (SLG)
  KNIFE GATE (KNG)
  SLUICE GATE (SCG)
- AIR RELIEF VALVE (ARV)
- EYEWASH STATION

LEVEL

- LS / XXXX — FLOAT SWITCH
- LE / XXXX — EXTERNAL CHAMBER
- LE / XXXX — ULTRASONIC OR RADAR
- LG / XXXX — SIGHT GAUGE
- LG / XXXX — MAGNETIC LEVEL GAUGE

VARIABLE FREQUENCY DRIVE

VFD — SYMBOL USED AND INCLUDES THE FOLLOWING TYPICAL FUNCTIONS

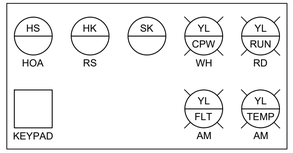

LINE TYPES

- PRIMARY PROCESS LINE
- SECONDARY PROCESS LINE
- EXISTING PROCESS LINE
- ELECTRIC SIGNAL
- SOFTWARE LINK, COMMUNICATION LINK
- FOC — FIBER OPTIC COMMUNICATION
- HYDRAULIC SIGNAL
- PNEUMATIC SIGNAL
- YYY | XXX | DDD — PROCESS/SIGNAL LINE OFF PAGE CONTINUATION
  YYY = SERVICE, XXX = SHEET NUMBER
  DDD = DESCRIPTION
- TP / XX — TIE-IN POINT
- INSULATED PROCESS LINE

PIPING

- CONCENTRIC REDUCER (YxX)
- ECCENTRIC REDUCER (YxX)
- Y-STRAINER
- VENT
- DIAPHRAGM SEAL WITH ISOLATION VALVE
- PULSATION DAMPENER WITH ISOLATION VALVE
- FLEXIBLE CONNECTION
- QUICK CONNECT
- DRAIN
- CALIBRATION COLUMN

ABBREVIATIONS

A	AUTOMATIC
AI	ANALOG INPUT
AO	ANALOG OUTPUT
ALT	ALTERNATE
AS	AIR SUPPLY
CHW	CHILLED WATER
COND	CONDUCTIVITY
CP	CONTROL PANEL
CS	CONTROL STATION
DI	DIGITAL INPUT
DO	DIGITAL OUTPUT
DO	DISSOLVED OXYGEN
DW	DRINKING WATER
ETR	EXISTING TO REMAIN
FC	FAIL CLOSED
FO	FAIL OPEN
H	HAND
H2S	HYDROGEN SULFIDE
HMI	HUMAN MACHINE INTERFACE
HOA	HAND - OFF - AUTO
HP	HORSEPOWER
L	LOCAL
LEL	LOWER EXPLOSIVE LIMIT
LOR	LOCAL - OFF - REMOTE
M	MODULATE
MCC	MOTOR CONTROL CENTER
MM	MULTI-MODE FIBER OPTIC CABLE
NIC	NOT IN CONTRACT
NC	NETWORK CABINET OR NORMALLY CLOSED
NTS	NOT TO SCALE
O2	OXYGEN CONCENTRATION
ORP	OXIDATION/REDUCTION POTENTIAL
PH	HYDROGEN ION CONCENTRATION
PLC	PROGRAMMABLE LOGIC CONTROLLER
REQ'D	REQUIRED
RTU	REMOTE TELEMETRY UNIT
RW	RAW WATER
SCADA	SUPERVISORY CONTROL AND DATA ACQUISITION
S.G.	SPECIFIC GRAVITY
SM	SINGLE-MODE FIBER OPTIC CABLE
SP	SET POINT
SS	STAINLESS STEEL
TYP	TYPICAL
UON	UNLESS OTHERWISE NOTED
VFD	VARIABLE FREQUENCY DRIVE
WW	WASTEWATER
WP	WEATHERPROOF
XP	EXPLOSION PROOF

GENERAL NOTES:

1. THIS IS A GENERAL LEGEND SHEET. SOME SYMBOLS AND ABBREVIATIONS MAY NOT APPLY TO THIS SPECIFIC PROJECT.
2. THE SYMBOLS SHOWN ARE GENERALLY BASED ON THE INSTRUMENT SOCIETY OF AMERICA'S STANDARDS. SOME ADDITIONS AND ALTERNATIONS MAY HAVE BEEN MADE TO ACCOMMODATE SPECIFIC PROJECT REQUIREMENTS.
3. SOME PROCESS ITEMS (EQUIPMENT, VALVES, LINES, FITTINGS, ETC.) THAT ARE NOT CRITICAL FOR THE OVERALL UNDERSTANDING OF THE INSTRUMENTATION AND CONTROL SYSTEM FUNCTIONS ARE NOT SHOWN FOR CLARITY.
4. REFER TO THE ELECTRICAL DRAWINGS AND SPECIFICATIONS FOR ADDITIONAL CONTROLS, INTERLOCKS AND OTHER REQUIREMENTS FOR EQUIPMENT THAT MAY NOT BE SUPPLIED BY THE SYSTEMS INTEGRATOR.

US Army Corps of Engineers®

MARK	DESCRIPTION	DATE

DESIGNED BY: B. WINCHELL
DRAWN BY: E. DIOCSON
CHECKED BY: S. SULLIVAN
SUBMITTED BY: J. KASHIWADA
ISSUE DATE: 05/06/2019
SOLICITATION NO.:
CONTRACT NO.:
FILE NO: 1-04-0642
FILE NAME: E-602.dwg
SIZE: ANSI D
SPEC NO: 21222

U.S. ARMY CORPS OF ENGINEERS
SACRAMENTO DISTRICT

MEAD & HUNT, INC.
180 PROMENADE CIRCLE, SUITE 240
SACRAMENTO, CA 95834

AMERICAN RIVER COMMON FEATURES
NATOMAS BASIN REACH B
RIVERSIDE CANAL PHASE 2 RELOCATION PROJECT

PROCESS AND INSTRUMENTATION SYMBOLS AND ABBREVIATIONS

SHEET ID
I-001

X:\1941500\161390.01\TECH\CAD\Riverside Canal\E-602.dwg

FINAL ISSUE FOR BID

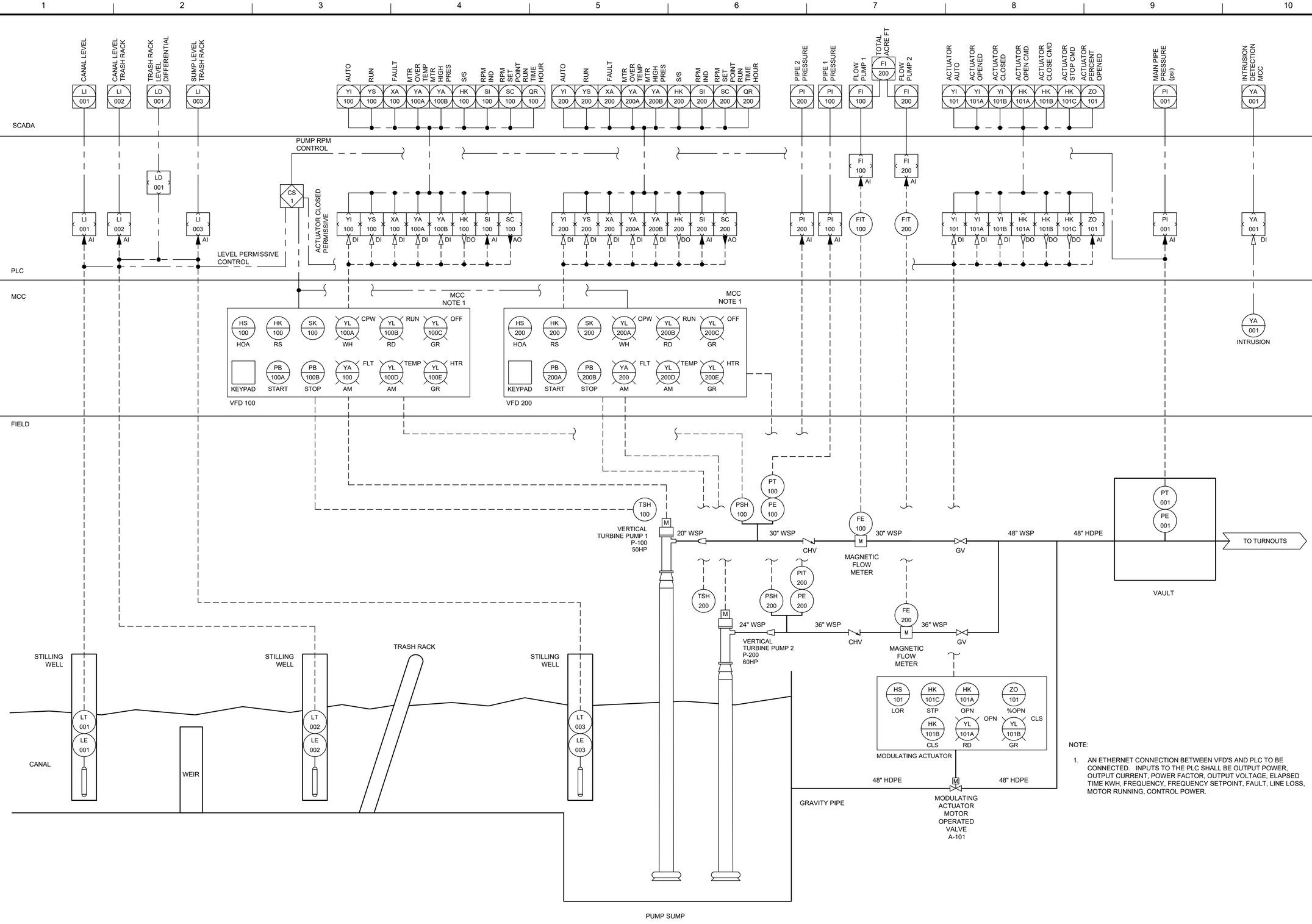

NOTE:

1. AN ETHERNET CONNECTION BETWEEN VFD'S AND PLC TO BE CONNECTED. INPUTS TO THE PLC SHALL BE OUTPUT POWER, OUTPUT CURRENT, POWER FACTOR, OUTPUT VOLTAGE, ELAPSED TIME KWH, FREQUENCY, FREQUENCY SETPOINT, FAULT, LINE LOSS, MOTOR RUNNING, CONTROL POWER.

US Army Corps of Engineers®

MARK	DESCRIPTION	DATE

ISSUE DATE: 05/09/2013
SOLICITATION NO.:
CONTRACT NO.:
FILE NO: I-04-0842
FILE NAME: E-602.dwg

DESIGNED BY: B. WINCHELL
DRAWN BY: E. DIOCSON
CHECKED BY: S. SULLIVAN
SUBMITTED BY: J. KASHIWADA
SIZE: ANSI D
SPEC NO: 2222

U.S. ARMY CORPS OF ENGINEERS
SACRAMENTO DISTRICT

MEAD & HUNT, INC.
180 PROMENADE CIRCLE, SUITE 240
SACRAMENTO, CA 95834

AMERICAN RIVER COMMON FEATURES
NATOMAS BASIN REACH B
RIVERSIDE CANAL PHASE 2 RELOCATION PROJECT

PROCESS AND INSTRUMENTATION LIFT STATION

SHEET ID
I-002

X:\19941500\161390.01\TECH\CAD\Riverside Canal\E-602.dwg

FINAL ISSUE FOR BID