Route 5 - Shasta County Bridge No.06-0089 KP 2

ANTLER BRIDGE REPLACEM

August 7, 2008

Caltrnas Antlers Bridge Replacement						
SHA-5-PM R39.0/R41.2						
Impacts to Waters of the U.S.						
Jurisdictional Water	Length of Waters Within Environmental Study Limits	Area of Waters Within Environmental Study Limits	Permanent Impacts		Temporary Impacts	
	lf	sq ft	lf	sq ft	lf	sq ft
DS-1	n/a	n/a	0	0	0	0
DS-2	n/a	n/a	0	0	0	0
DS-3	n/a	n/a	0	0	0	0
A	324	810	19	43	0	0
B	519	519	0	0	0	0
C	159	159	0	0	0	0
D	374	374	0	0	0	0
E	434	503	426	494	10	12
F	468	1,403	62	186	20	60
G	735	918	209	265	20	25
H	924	3,928	78	337	20	85
I	587	1,173	327	654	72	429
J	439	219	14	7	126	710
K	819	8,186	0	0	0	0
L	690	5,519	0	0	0	0
M	1,096	548	1,096	548	0	0
Shasta Lake	n/a	1,929,662	0	53,307	138	292,540
Wetland	n/a	600	0	0	0	0
Totals	7,565	1,954,520	2,231	55,841	406	293,861

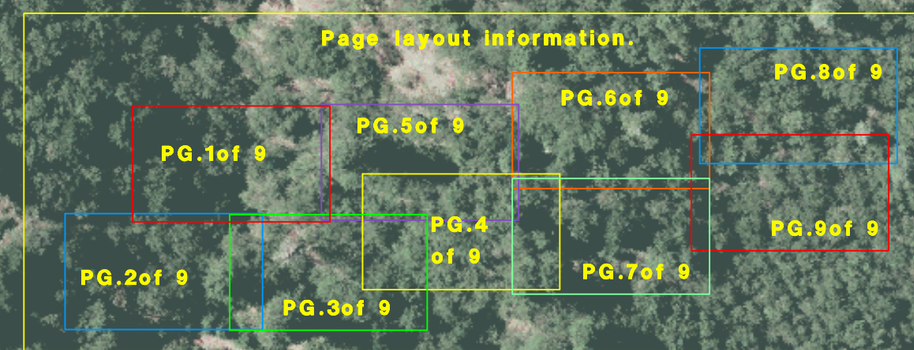

SCALE 1 IN. = 83 FT. (25 M)
Note: Stations are shown in meters.

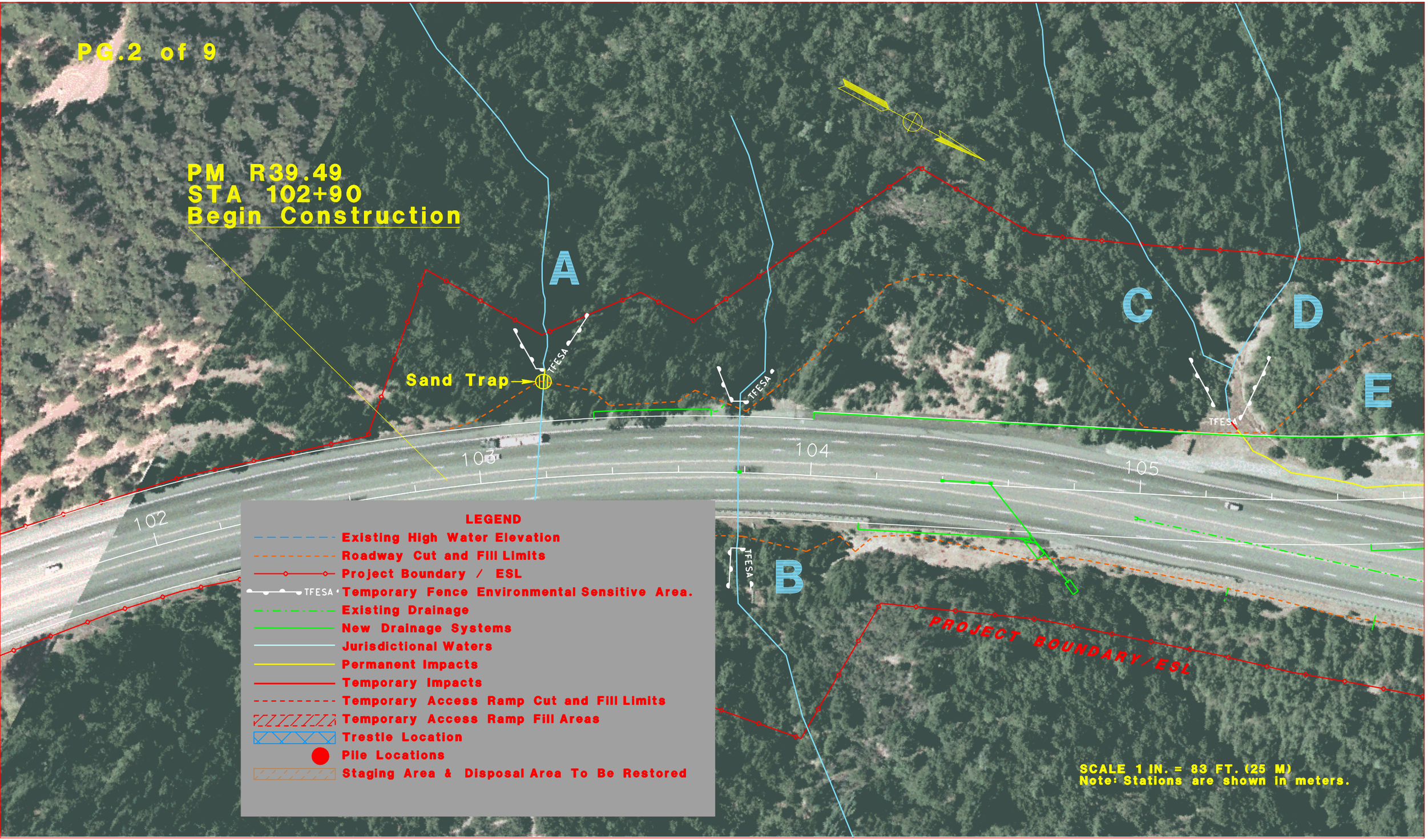
PG.2 of 9
PM R39.49
STA 102+90
Begin Construction
A
B
C
D
E
Sand Trap
TFESA
102
103
104
105
PROJECT BOUNDARY/ESL
LEGEND
Existing High Water Elevation
Roadway Cut and Fill Limits
Project Boundary / ESL
Temporary Fence Environmental Sensitive Area.
Existing Drainage
New Drainage Systems
Jurisdictional Waters
Permanent Impacts
Temporary Impacts
Temporary Access Ramp Cut and Fill Limits
Temporary Access Ramp Fill Areas
Trestle Location
Pile Locations
Staging Area & Disposal Area To Be Restored
SCALE 1 IN. = 83 FT. (25 M)
Note: Stations are shown in meters.

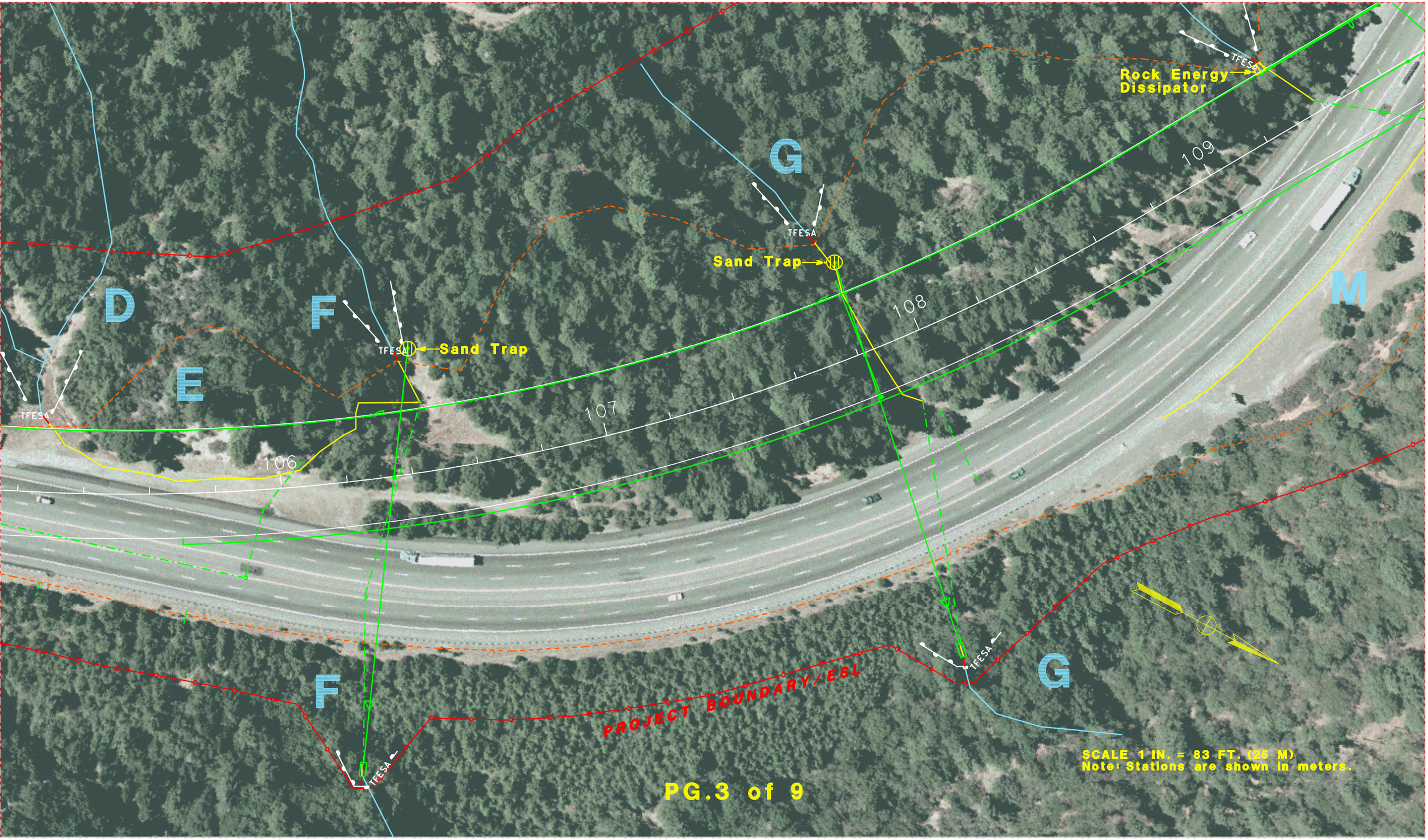
Rock Energy Dissipator
Sand Trap
Sand Trap
TFESA
TFESA
TFESA
TFESA
TFESA
TFESA
D
E
F
G
F
G
M
109
108
107
106
PROJECT BOUNDARY/ESL
SCALE 1 IN. = 83 FT. (25 M)
Note: Stations are shown in meters.

s
& Disposal Area To Be Restored
PROJECT BOUNDARY/ESL
BEGIN
BRIDGE
110+89
Sand Trap
PIER 2
M
H
Modified
Sand Trap
TFESA
ESA Construction
Limit Line for Abut. 1
and Pier 2.
Rock Energy
Dissipator
Modified
Sand Trap
110
109
111
Existing High Wat
Elev. 1069.7 ft (32
PROJECT BOUNDARY/ESL
SCALE 1 IN. = 83 FT. (25 M)
Note: Stations are shown in meters.

P 2.8/R66.3 (PM R39.0/R41.2)

MENT PROJECT

Scale 1:1000

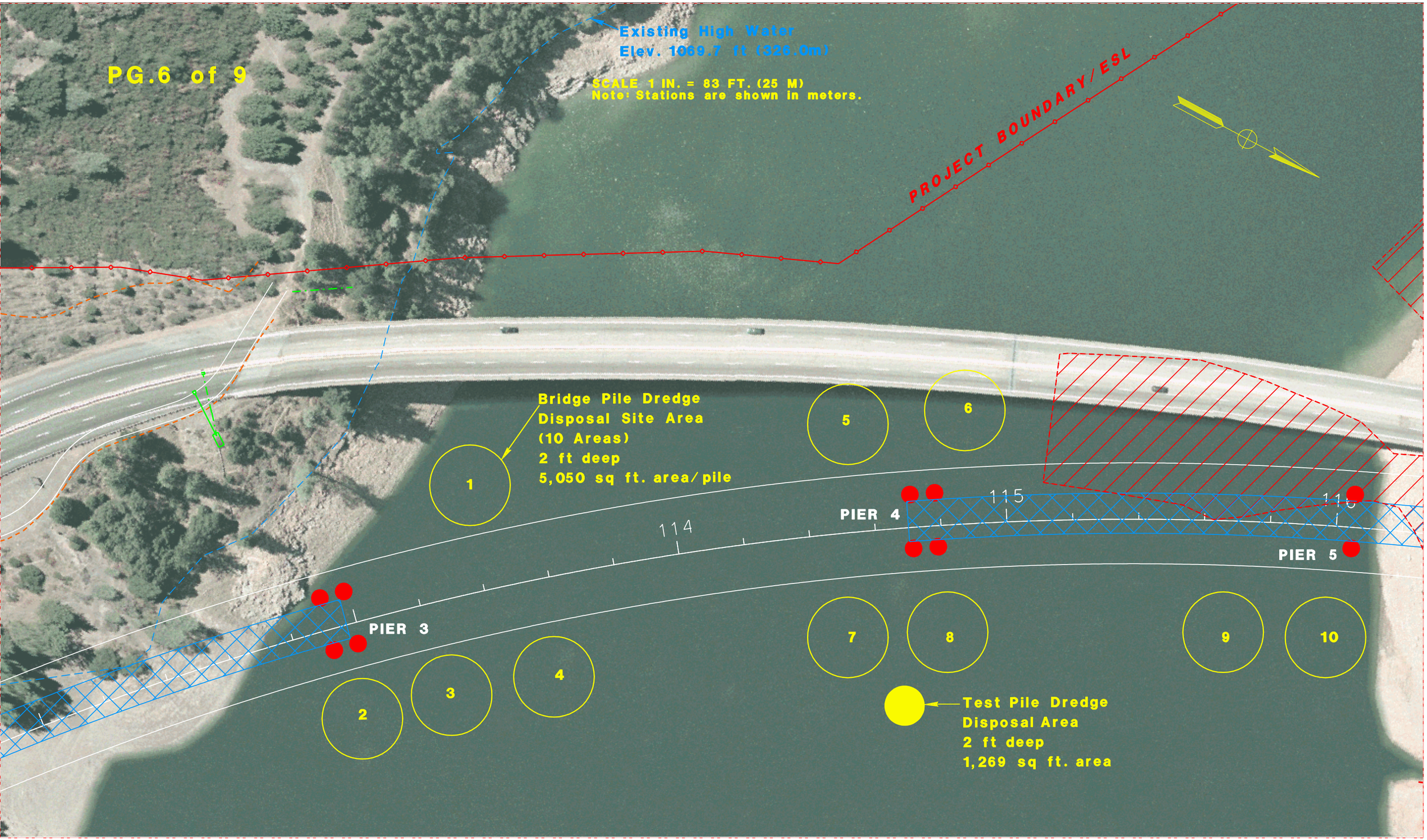
PG.6 of 9
Existing High Water
Elev. 1069.7 ft (326.0m)
SCALE 1 IN. = 83 FT. (25 M)
Note: Stations are shown in meters.
PROJECT BOUNDARY/ESL
Bridge Pile Dredge
Disposal Site Area
(10 Areas)
2 ft deep
5,050 sq ft. area/pile
1
2
3
4
5
6
7
8
9
10
114
115
PIER 3
PIER 4
PIER 5
Test Pile Dredge
Disposal Area
2 ft deep
1,269 sq ft. area

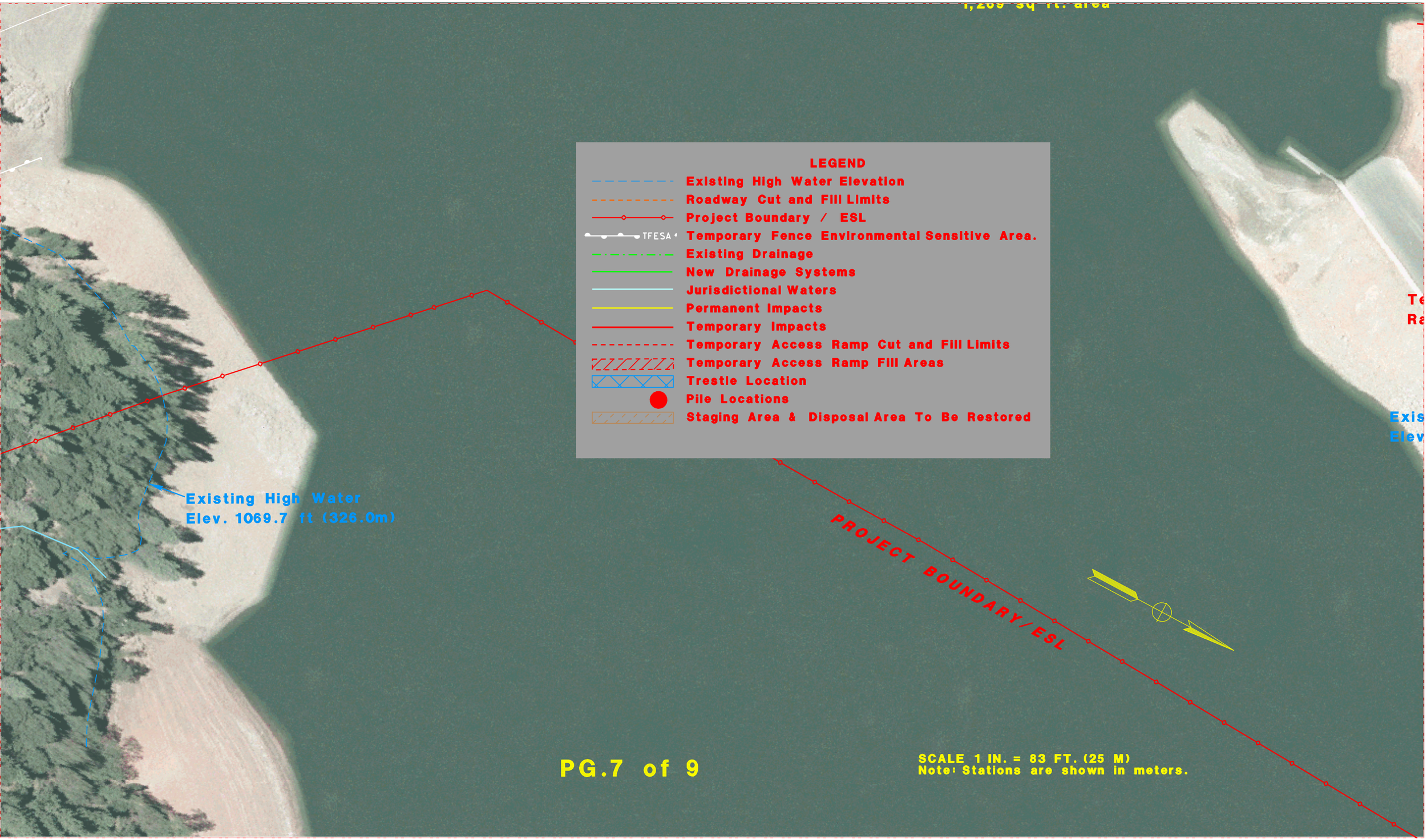
1,269 sq ft. area
LEGEND
Existing High Water Elevation
Roadway Cut and Fill Limits
Project Boundary / ESL
TFESA
Temporary Fence Environmental Sensitive Area.
Existing Drainage
New Drainage Systems
Jurisdictional Waters
Permanent Impacts
Temporary Impacts
Temporary Access Ramp Cut and Fill Limits
Temporary Access Ramp Fill Areas
Trestle Location
Pile Locations
Staging Area & Disposal Area To Be Restored
Existing High Water
Elev. 1069.7 ft (326.0m)
PROJECT BOUNDARY/ESL
SCALE 1 IN. = 83 FT. (25 M)
Note: Stations are shown in meters.

PG.8 of 9
Temporary Access Ramp (Westside)
Existing High Water Elev. 1069.7 ft (326.0m)
SCALE 1 IN. = 83 FT. (25 M)
Note: Stations are shown in meters.
PROJECT BOUNDARY/ESL
SOUTHERN PACIFIC RR
TFESA
Staging Area & Disposal Area To Be Restored
ESA Construction Limit Line
117
118
119

ER 5
10
117
118
119
120
L
K
ESA
TFESA
END
BRIDGE
116+81
Staging Area & Disposal
Area To Be Restored
PROJECT BOUNDARY/ESL
Temporary Access
Ramp (Eastside)
Existing High Water
Elev. 1069.7 ft (326.0m)
SCALE 1 IN. = 83 FT. (25 M)
Note: Stations are shown in meters.

ANTLER BRIDGE REPLACEMENT PROJECT

Alternate Disposal Site Information

INDEX OF SHEETS

Dist	COUNTY	ROUTE	KILOMETER POST TOTAL PROJECT	SHEET No.	TOTAL SHEETS
02	Sha	5	R63.2/R65.8		

STATE OF CALIFORNIA

DEPARTMENT OF TRANSPORTATION

PROJECT PLANS FOR CONSTRUCTION ON

STATE HIGHWAY

IN SHASTA COUNTY NEAR LAKEHEAD FROM 0.3 KM NORTH OF ANTLER SUMMIT OVERCROSSING TO 0.5 KM NORTH OF ANTLER UNDERPASS

TO BE SUPPLEMENTED BY STANDARD PLANS DATED JULY 2004

DRAFT

LOCATION MAP

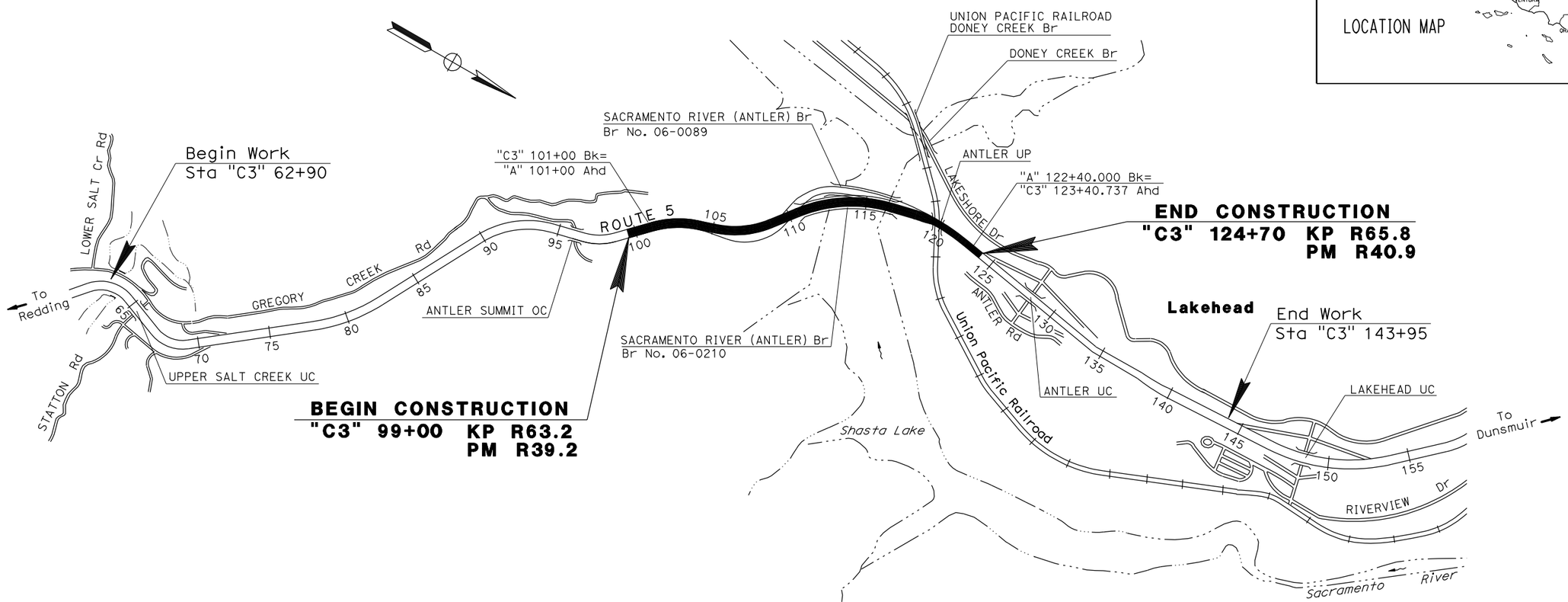

DRAFT

NO SCALE

Caltrans Metric

PROJECT ENGINEER DATE
REGISTERED CIVIL ENGINEER

PLANS APPROVAL DATE

REGISTERED PROFESSIONAL ENGINEER No. Exp. CIVIL STATE OF CALIFORNIA

THE STATE OF CALIFORNIA OR ITS OFFICERS OR AGENTS SHALL NOT BE RESPONSIBLE FOR THE ACCURACY OR COMPLETENESS OF ELECTRONIC COPIES OF THIS PLAN SHEET.

THE CONTRACTOR SHALL POSSESS THE CLASS (OR CLASSES) OF LICENSE AS SPECIFIED IN THE "NOTICE TO CONTRACTORS."

PROJECT MANAGER

DESIGN ENGINEER

LAST REVISION 00-00-00 DATE PLOTTED => 11-AUG-2008 TIME PLOTTED => 11:10

CONTRACT No. **02-378904**

CU 03261 | EA 378901

DIST	COUNTY	ROUTE	KILOMETER POST TOTAL PROJECT	SHEET No	TOTAL SHEETS
02	Sha	5			

REGISTERED CIVIL ENGINEER DATE

PLANS APPROVAL DATE

REGISTERED PROFESSIONAL ENGINEER No. Exp. CIVIL STATE OF CALIFORNIA

The State of California or its officers or agents shall not be responsible for the accuracy or completeness of electronic copies of this plan sheet.

Caltrans now has a web site! To get to the web site, go to: http://www.dot.ca.gov

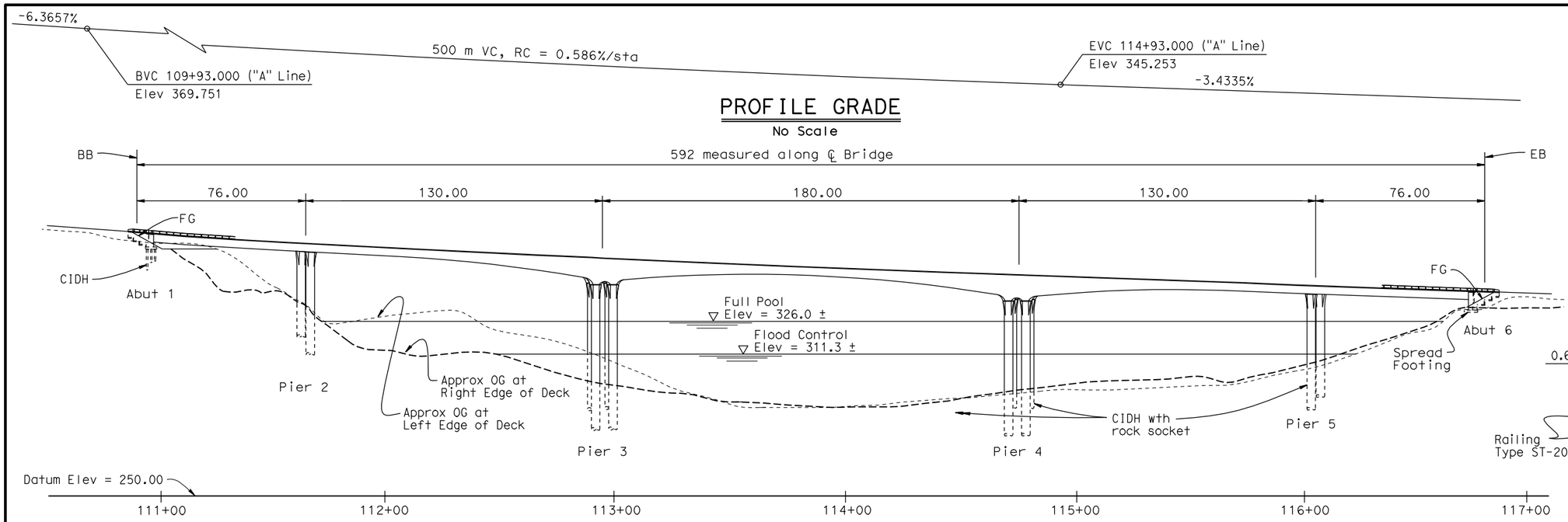

ELEVATION

1:1000

DRAFT

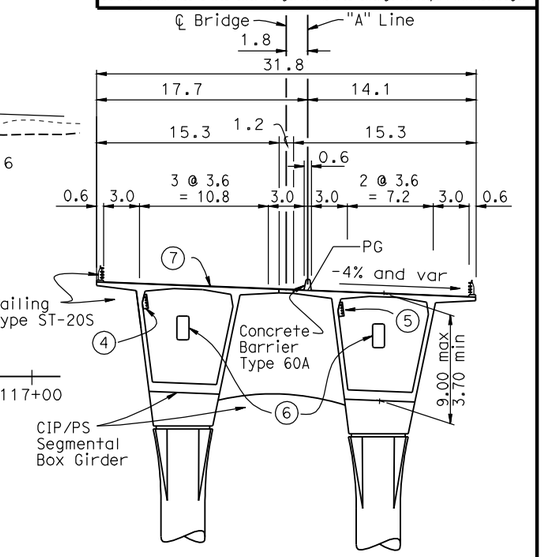

TYPICAL SECTION

1:250

Legend:

- Indicates existing structure
- (1) Paint "Sacramento River (Antlers) Bridge"
- (2) Paint Bridge Number
- (3) Metal Beam Guardrail, See Road Plans
- (4) Utility Openings
- (5) Future Utility Openings
- (6) Maintenance Openings
- (7) Polyester Concrete Overlay, 20mm
- (8) Structure Approach Slab
- (9) For Deck Drains Layout, see "Typical Section No. 1" sheet.

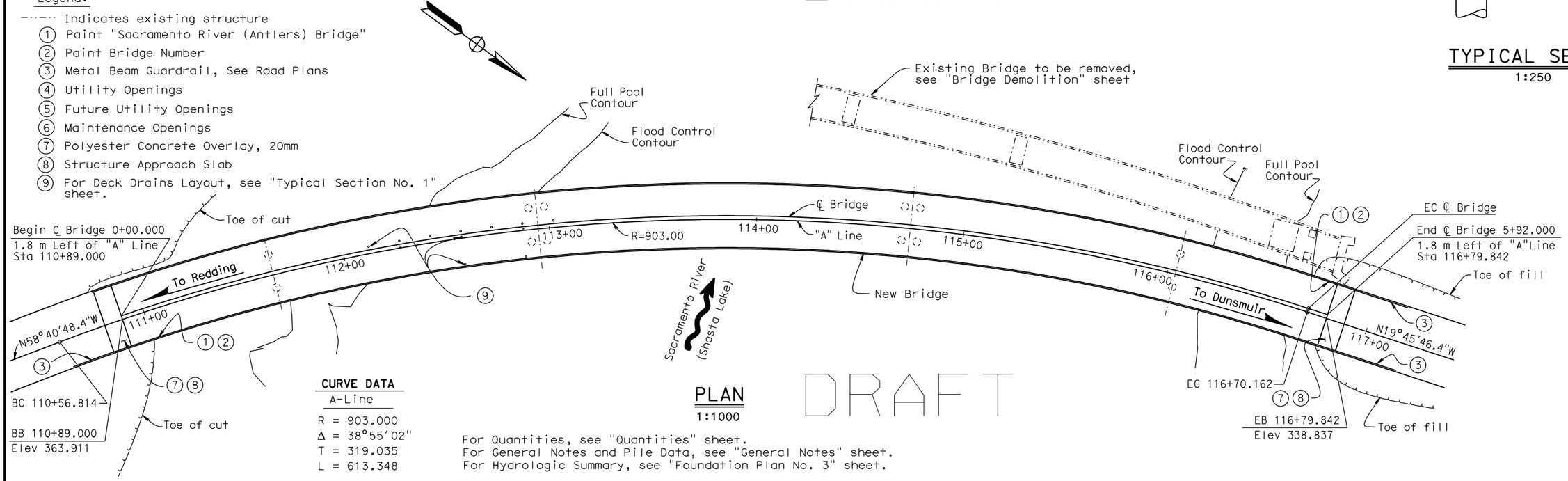

CURVE DATA

A-Line

R = 903.000
Δ = 38°55'02"
T = 319.035
L = 613.348

PLAN

1:1000

DRAFT

For Quantities, see "Quantities" sheet.
For General Notes and Pile Data, see "General Notes" sheet.
For Hydrologic Summary, see "Foundation Plan No. 3" sheet.

Caltrans Metric

DESIGN ENGINEER

DESIGN	BY	CHECKED	LRFD	LIVE LOADING: HL-93 AND P-15	
DETAILS	BY	CHECKED	LAYOUT	BY	CHECKED
QUANTITIES	BY	CHECKED	SPECIFICATIONS	BY	PLANS AND SPECS COMPARED

ALL DIMENSIONS ARE IN METERS UNLESS OTHERWISE SHOWN

ORIGINAL SCALE IN MILLIMETERS FOR REDUCED PLANS 0 10 20 30 40 50 60 70 80 90 100

STATE OF CALIFORNIA DEPARTMENT OF TRANSPORTATION

DIVISION OF ENGINEERING SERVICES STRUCTURE DESIGN

CU 02
EA 378901

BRIDGE NO. 06-0210
KILOMETER POST R64.34

SACRAMENTO RIVER (ANTLERS) BRIDGE (REPLACE)

GENERAL PLAN

DISREGARD PRINTS BEARING EARLIER REVISION DATES

REVISION DATES: 8-13-08 Corps 3-06-08 7-15-08 3-23-07 5-09-07 5-16-07 11-20-07 11-29-07

SHEET 1 OF 172

Dist	COUNTY	ROUTE	KILOMETER POST TOTAL PROJECT	SHEET No.	TOTAL SHEETS
02	Sha	5	R63.2/R65.8		

REGISTERED CIVIL ENGINEER DATE

PLANS APPROVAL DATE

REGISTERED PROFESSIONAL ENGINEER No. Exp. CIVIL STATE OF CALIFORNIA

THE STATE OF CALIFORNIA OR ITS OFFICERS OR AGENTS SHALL NOT BE RESPONSIBLE FOR THE ACCURACY OR COMPLETENESS OF ELECTRONIC COPIES OF THIS PLAN SHEET.

Caltrans Metric

DRAFT

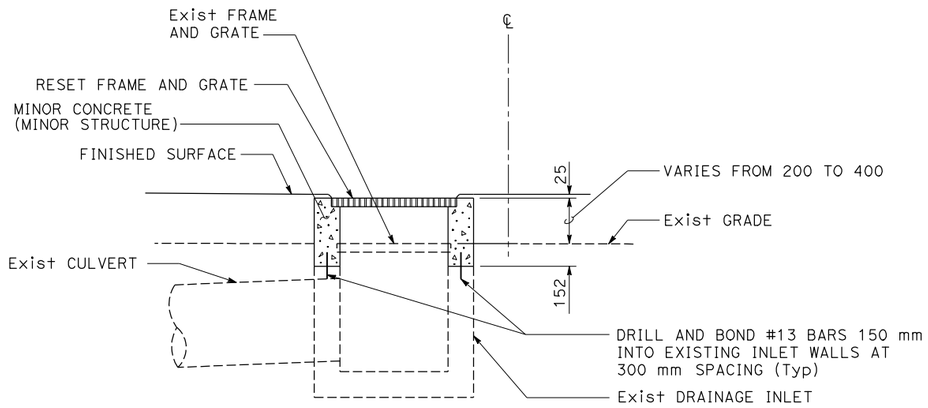

ADJUST INLET

1 a 2 a 3 a 4 a 5 a

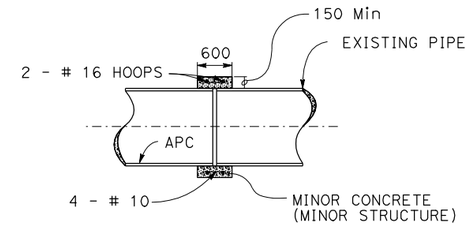

CONCRETE COLLAR DETAIL

	DIAMETER	LENGTH	WIDTH	DEPTH	RSP (LIGHT, METHOD B)	RSP (BACKING No. 2, METHOD B)
		m	m	m	m^3	m^3
600 mm APC & DD		4.20	1.80	1.00	7.56	
200 mm PPP UD		1.60	0.60	0.30		0.29
80 mm SLOTTED PLASTIC PIPE (EDGE DRAIN)		0.50	0.30	0.10		0.02
HMA OSD		5.50	2.50	0.50	6.88	
750 mm APC		6.00	2.25	1.00	13.5	

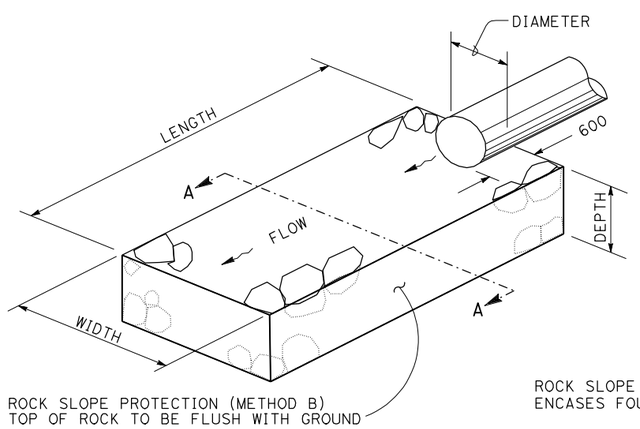

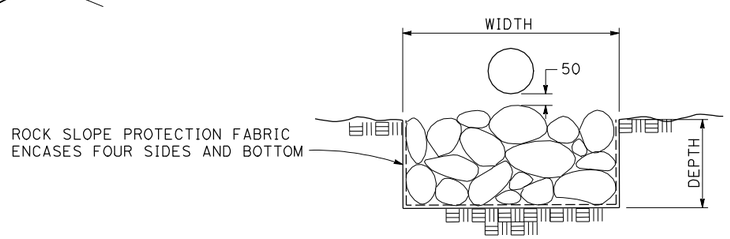

SECTION A-A

ROCK SLOPE PROTECTION

DRAINAGE SYSTEM No.

6 g 7 b 11 k l m 12 i j 14 u

15 b 16 m 17 c 18 j 19 c 22 c 23 c

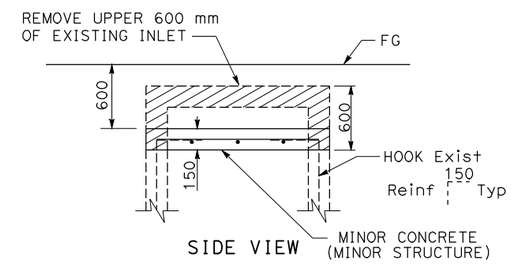

SIDE VIEW

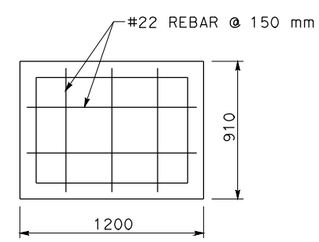

TOP VIEW

CAP INLET

DRAINAGE SYSTEM No.

8 e 11 d

14 g p 25 n

ALL DIMENSIONS ARE IN MILLIMETERS UNLESS OTHERWISE SHOWN

DRAINAGE DETAILS

NO SCALE

DD-1

LAST REVISION 00-00-00 | DATE PLOTTED => 12-AUG-2008 | TIME PLOTTED => 10:40

REVISED BY | DATE REVISED

CALCULATED-DESIGNED BY | CHECKED BY

FUNCTIONAL SUPERVISOR

STATE OF CALIFORNIA - DEPARTMENT OF TRANSPORTATION
NORTH REGION
OFFICE OF DESIGN,SOUTH
Caltrans

10:40 12-AUG-2008 s115863 DrainageDetail1.dgn

BORDER LAST REVISED 3/1/2007 | RELATIVE BORDER SCALE IS IN MILLIMETERS 0 20 40 60 80 | USERNAME => s115863 DGN FILE => DrainageDetail1.dgn | CU 03261 | EA 378901

Dist	COUNTY	ROUTE	KILOMETER POST TOTAL PROJECT	SHEET No.	TOTAL SHEETS
02	Sha	5	R63.2/R65.8		

REGISTERED CIVIL ENGINEER DATE

PLANS APPROVAL DATE

REGISTERED PROFESSIONAL ENGINEER No. Exp. CIVIL STATE OF CALIFORNIA

THE STATE OF CALIFORNIA OR ITS OFFICERS OR AGENTS SHALL NOT BE RESPONSIBLE FOR THE ACCURACY OR COMPLETENESS OF ELECTRONIC COPIES OF THIS PLAN SHEET.

Caltrans Metric

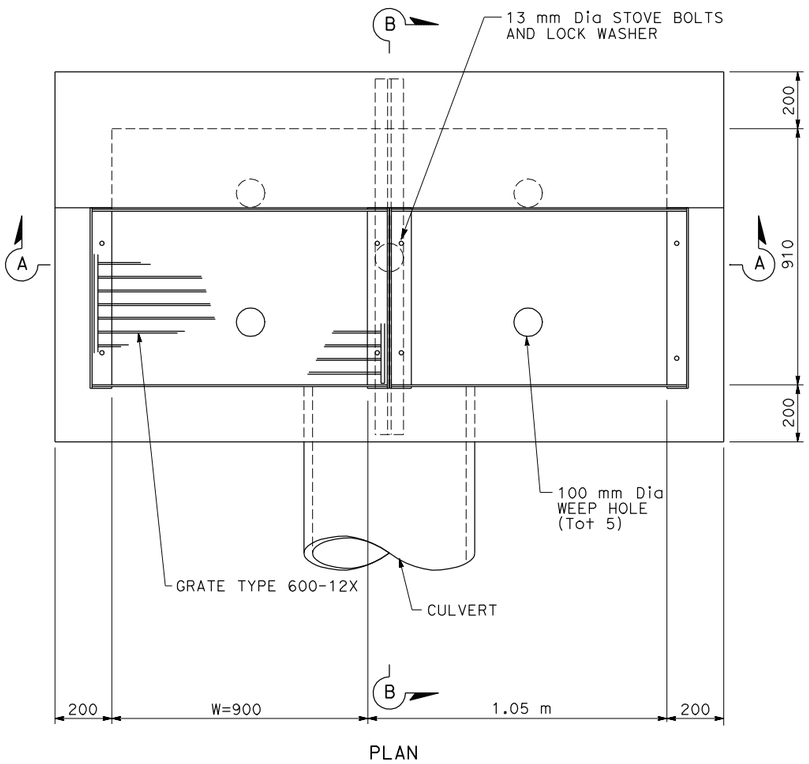

PLAN

TYPE GT4 (Mod) DI W/SAND TRAP

(FOR DETAILS NOT SHOWN, SEE Std PLAN D74A)

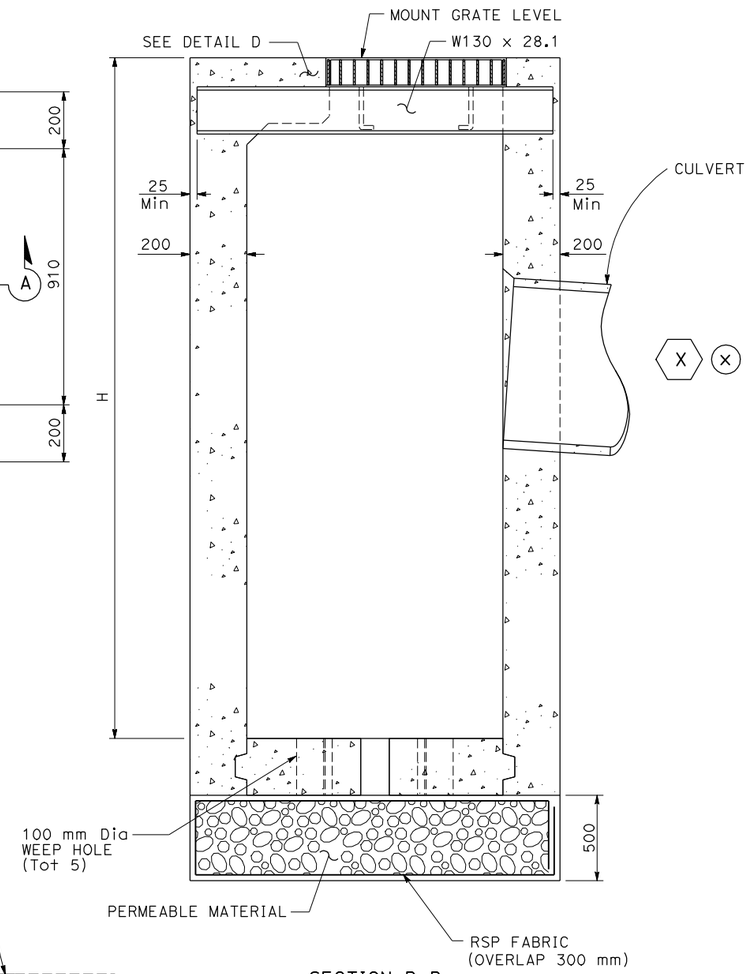

SECTION B-B

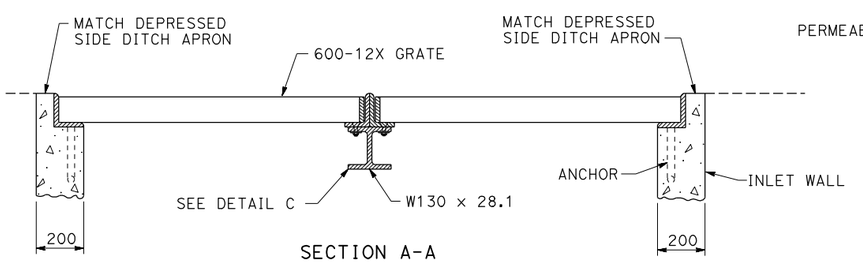

SECTION A-A

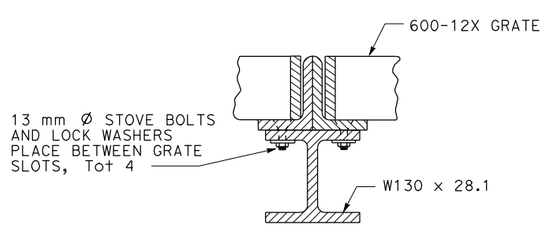

DETAIL C

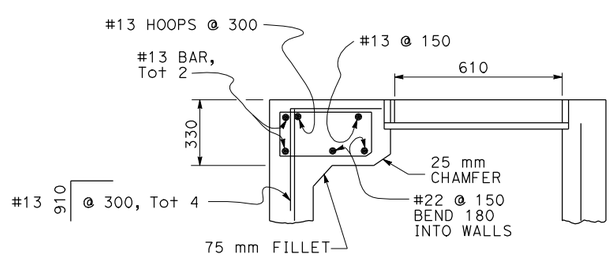

DETAIL D

DRAFT

ALL DIMENSIONS ARE IN MILLIMETERS UNLESS OTHERWISE SHOWN

DRAINAGE DETAILS

NO SCALE

DD-3

REVISED BY | DATE REVISED

CALCULATED-DESIGNED BY | CHECKED BY

FUNCTIONAL SUPERVISOR

STATE OF CALIFORNIA - DEPARTMENT OF TRANSPORTATION
NORTH REGION
OFFICE OF DESIGN, SOUTH

Caltrans

DrainageDetail3.dgn 12-AUG-2008 s115863 10:32

LAST REVISION 00-00-00 | DATE PLOTTED => 12-AUG-2008 | TIME PLOTTED => 10:32

BORDER LAST REVISED 3/1/2007 | RELATIVE BORDER SCALE IS IN MILLIMETERS 0 20 40 60 80 | USERNAME => s115863 | DGN FILE => DrainageDetail3.dgn | CU 03261 | EA 378901

Dist	COUNTY	ROUTE	KILOMETER POST TOTAL PROJECT	SHEET No.	TOTAL SHEETS
02	Sha	5	R63.2/R65.8		

REGISTERED CIVIL ENGINEER DATE

PLANS APPROVAL DATE

REGISTERED PROFESSIONAL ENGINEER No. Exp. CIVIL STATE OF CALIFORNIA

THE STATE OF CALIFORNIA OR ITS OFFICERS OR AGENTS SHALL NOT BE RESPONSIBLE FOR THE ACCURACY OR COMPLETENESS OF ELECTRONIC COPIES OF THIS PLAN SHEET.

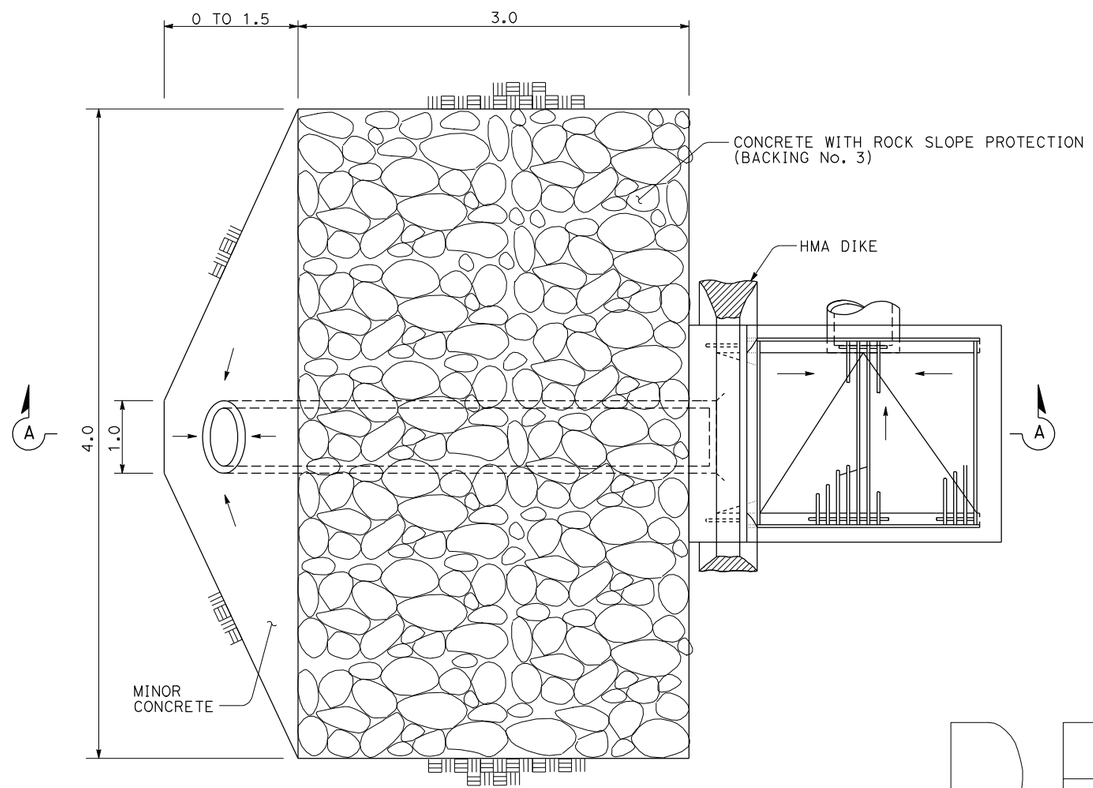

PLAN

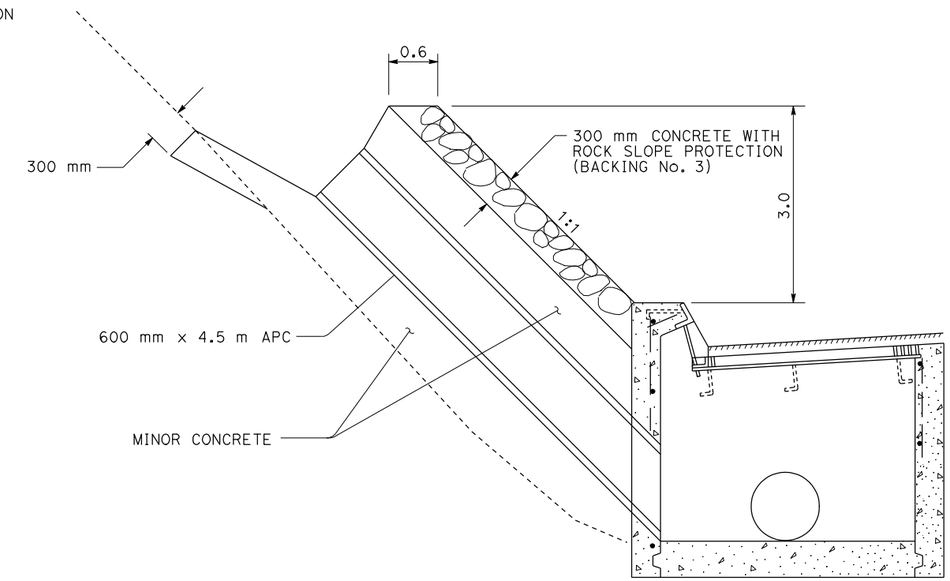

SECTION A-A

DRAFT

ROCK MASONRY ENERGY DISSIPATOR

NOTE: FOR DETAILS NOT SHOWN, SEE STANDARD PLANS

14 b

ALL DIMENSIONS ARE IN MILLIMETERS UNLESS OTHERWISE SHOWN

DRAINAGE DETAILS

NO SCALE

DD-7

REVISED BY | DATE REVISED

CALCULATED-DESIGNED BY | CHECKED BY

FUNCTIONAL SUPERVISOR

STATE OF CALIFORNIA - DEPARTMENT OF TRANSPORTATION
NORTH REGION
OFFICE OF DESIGN, SOUTH

Caltrans

12-AUG-2008 s115863 DrainageDetail7.dgn 11:22

LAST REVISION 00-00-00 | DATE PLOTTED => 12-AUG-2008 | TIME PLOTTED => 11:22

BORDER LAST REVISED 3/1/2007 | RELATIVE BORDER SCALE IS IN MILLIMETERS 0 20 40 60 80 | USERNAME => s115863 DGN FILE => DrainageDetail7.dgn | CU 03261 | EA 378901

DIST	COUNTY	ROUTE	KILOMETER POST TOTAL PROJECT	SHEET No	TOTAL SHEETS
02	Sha	5			

REGISTERED CIVIL ENGINEER DATE

PLANS APPROVAL DATE

REGISTERED PROFESSIONAL ENGINEER No. Exp. CIVIL STATE OF CALIFORNIA

The State of California or its officers or agents shall not be responsible for the accuracy or completeness of electronic copies of this plan sheet.

Caltrans now has a web site! To get to the web site, go to: http://www.dot.ca.gov

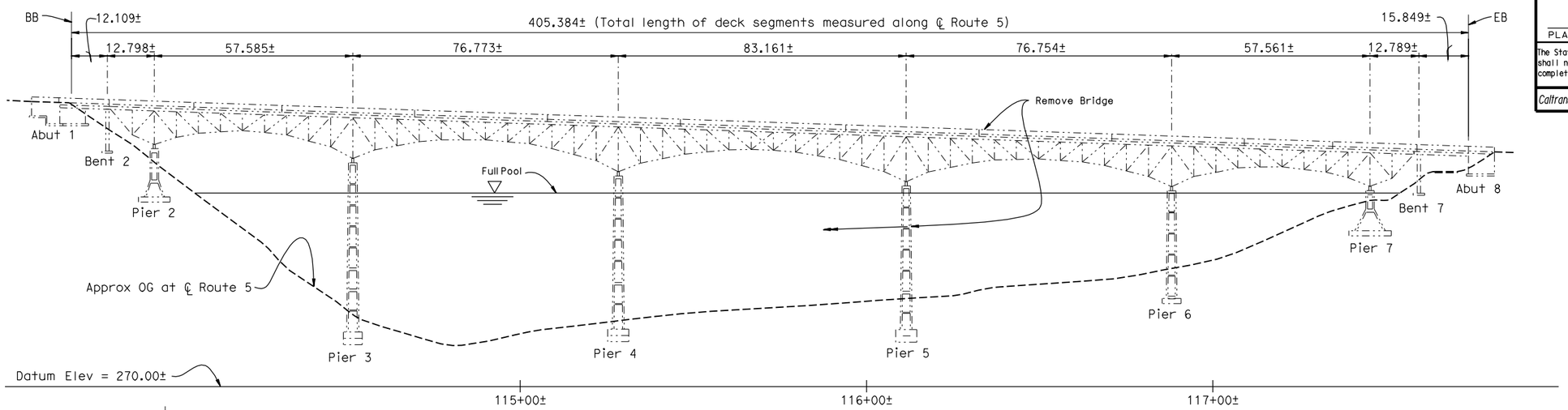

ELEVATION

No Scale

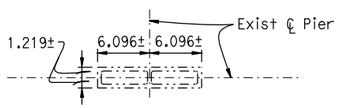

VIEW A-A

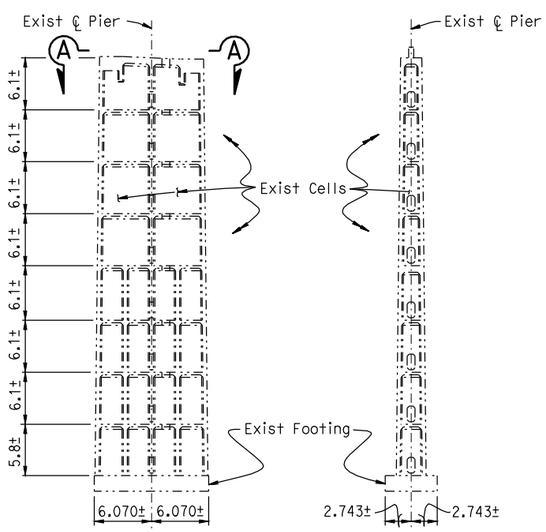

ELEVATION **SIDE VIEW**

PIER LAYOUT

No Scale
Pier 3 shown

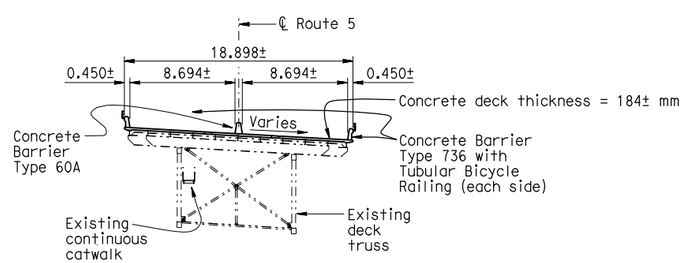

TYPICAL SECTION

No Scale

DRAFT

GENERAL DEMOLITION NOTES

1. Design Specifications:
   AASHTO "Manual for Condition Evaluation of Bridges, 1994" and Interim Revisions through 2000.

2. Structural Steel (Existing)
   (Assumed for demolition evaluation)

   Nickel-Copper Steel, Fy = 345 MPa
   Copper Bearing Carbon Steel (ASTM A7-36), Fy = 207 MPa

3. Rivets (Existing)
   (Assumed for demolition evaluation)

   Copper Bearing Carbon Steel (ASTM A141-38)
   Sizes: 19 mm dia, 22 mm dia,
   Bearing = 186 MPa - Allowable
   Shearing = 93 MPa - Allowable

4. Depending on the demolition sequence and equipment used, existing structure members and connections may require strengthening or supplemental bracing.

5. Existing utilities on the bridge shall be relocated prior to demolition..

6. Limits of Payment
   "Bridge Removal (Substructure)" includes the removal of all concrete piers and abutments from the top of concrete to 1000 mm below OG.

   "Bridge Removal (Superstructure)" includes the removal of all bridge components and appurtenances above and including the bearings.

USERNAME => s115863 DATE PLOTTED => 15-AUG-2008 TIME PLOTTED => 15:03

Caltrans Metric

DESIGN	BY	CHECKED
DETAILS	BY	CHECKED
QUANTITIES	BY	CHECKED

STATE OF CALIFORNIA
DEPARTMENT OF TRANSPORTATION

DIVISION OF ENGINEERING SERVICES
STRUCTURE DESIGN
DESIGN BRANCH

BRIDGE NO. 06-0210
KILOMETER POST R64.34

SACRAMENTO RIVER (ANTLERS) BRIDGE (REPLACE)

BRIDGE DEMOLITION

ALL DIMENSIONS ARE IN MILLIMETERS UNLESS OTHERWISE SHOWN

ORIGINAL SCALE IN MILLIMETERS FOR REDUCED PLANS 0 10 20 30 40 50 60 70 80 90 100

CU 02
EA 378901

DISREGARD PRINTS BEARING EARLIER REVISION DATES

REVISION DATES: 6-04-07 2-06-08 3-12-08 7-28-08 8-13-08 Corps

SHEET 85 OF 172

FILE => BridgeDemoPlan.dgn

STRUCTURES DESIGN DETAIL SHEET (METRIC) (REV.03-17-04)