DAM X-SECTION

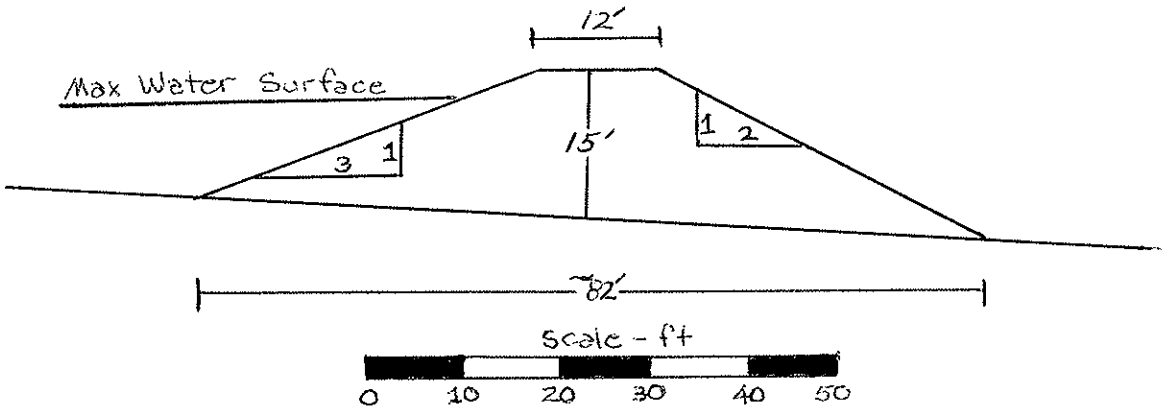
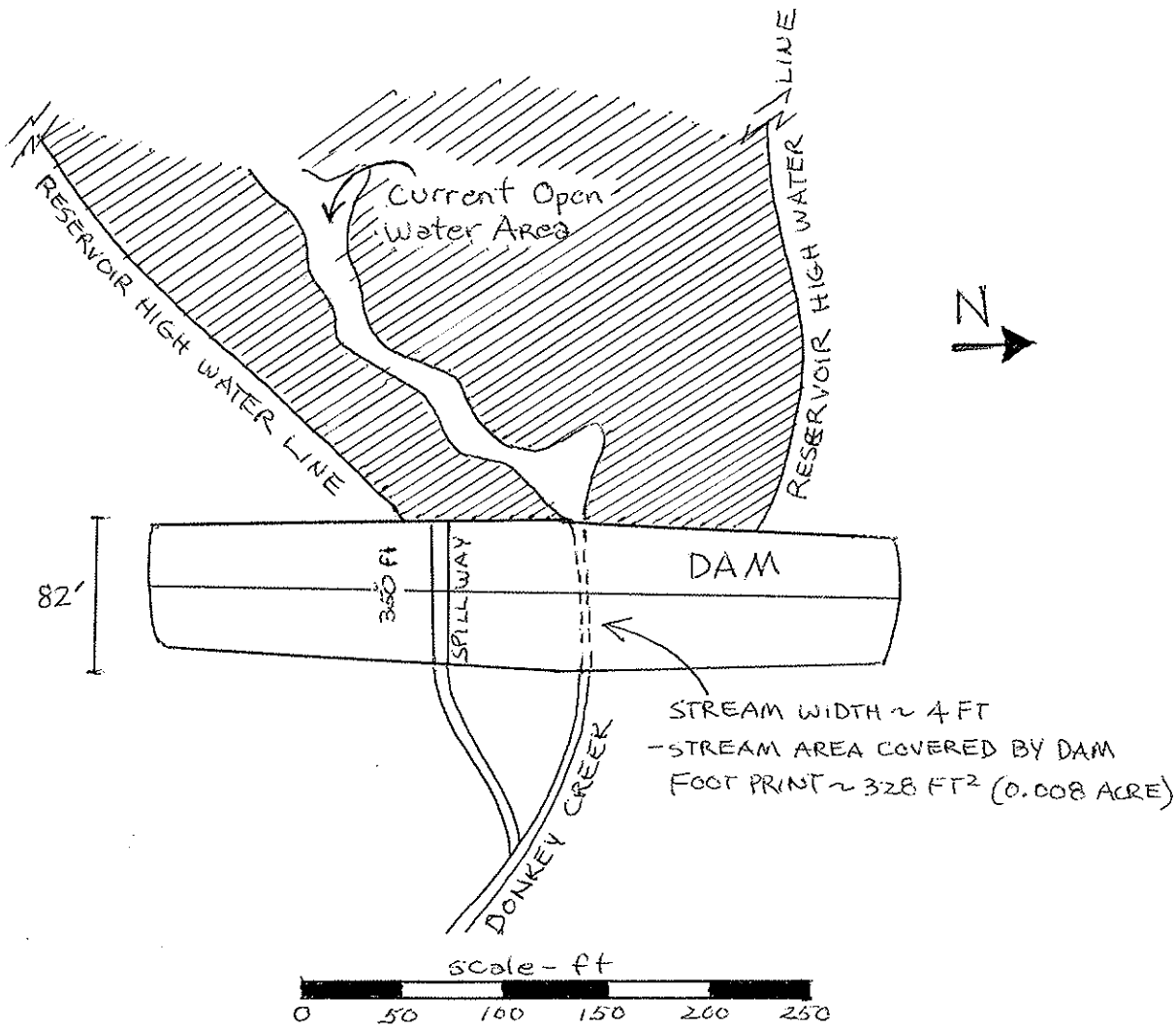
PLAN VIEW - DAM