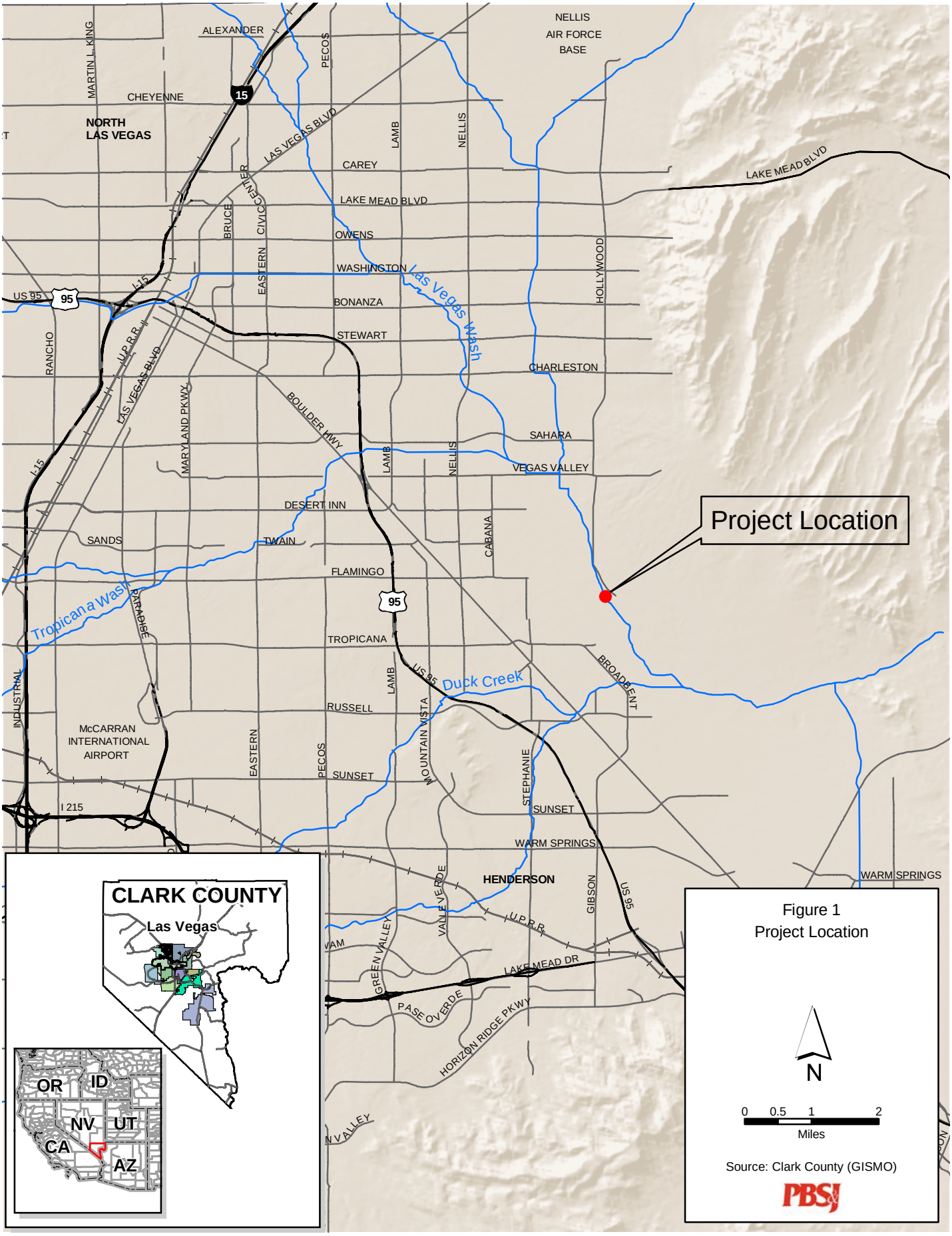

Figure 1
Project Location

5/5/04 JB P:\Projects\PubWrks\511516\mxd\Fig1_VicinityMap.mxd

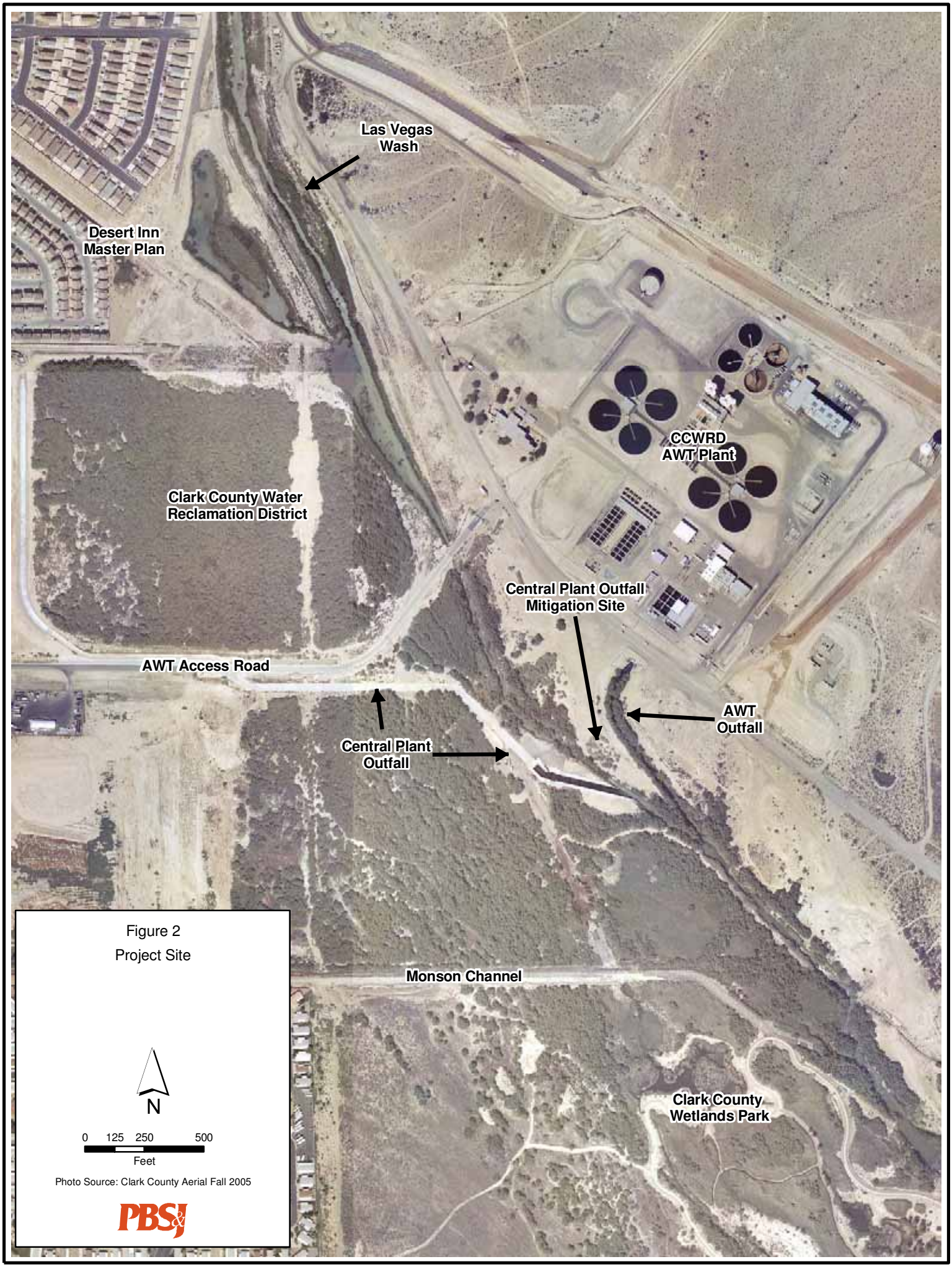

Figure 2
Project Site

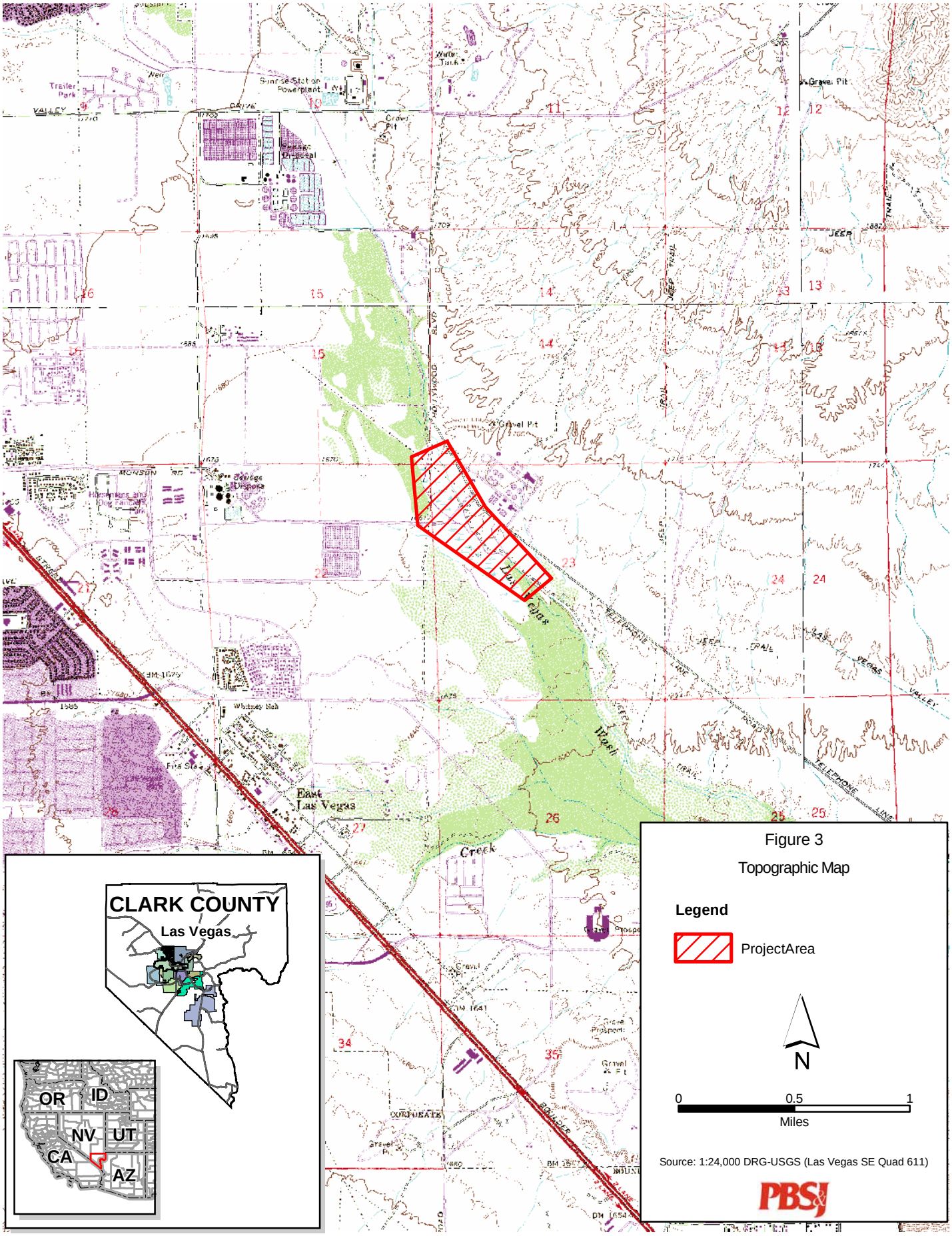

Figure 3

Topographic Map

5/6/04 JB P:\Projects\PubWrks\511516\mxd\Fig3_USGSMap.mxd

The "Clean Water Team"

CLARK COUNTY WATER RECLAMATION DISTRICT
LAS VEGAS WASH
CHANNELIZATION IMPROVEMENTS

FIGURE 4:
PROPOSED CHANNELIZATION IMPROVEMENTS

LEGEND

- CHANNELIZATION IMPROVEMENTS
- PROPOSED CONCRETE
- PROPOSED RIPRAP
- CCWRD PROPOSED MITIGATION AREA (9.93 ACRES)
- FILL AREA
- SNWA PROPOSED MITIGATION AREA (29.02 ACRES)

NOTE:
AERIAL SOURCE: CLARK COUNTY 2005 SPRING.

N

0 200 400 800
Feet

1 inch equals 400 feet

PBSJ

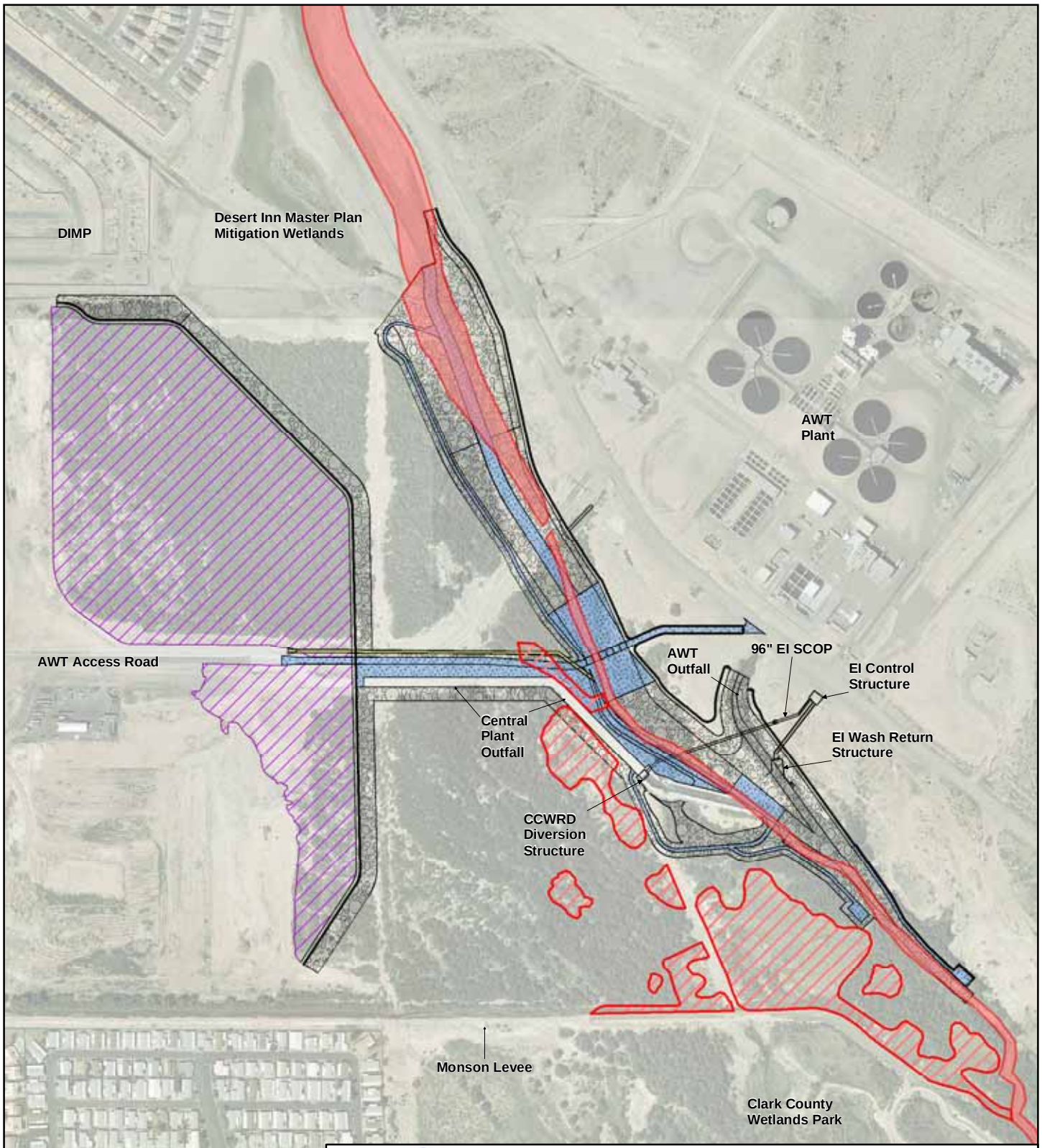

CLARK COUNTY WATER RECLAMATION DISTRICT
LAS VEGAS WASH CHANNELIZATION IMPROVEMENTS

LEGEND

- CHANNELIZATION IMPROVEMENTS
- PROPOSED CONCRETE
- PROPOSED RIPRAP
- WATERS OF THE U.S.
- JURISDICTIONAL WETLANDS
- FILL AREA

N

0 250 500 1,000

Feet

1 inch equals 500 feet

PBSJ

FIGURE 5 : JURISDICTIONAL IMPACTS

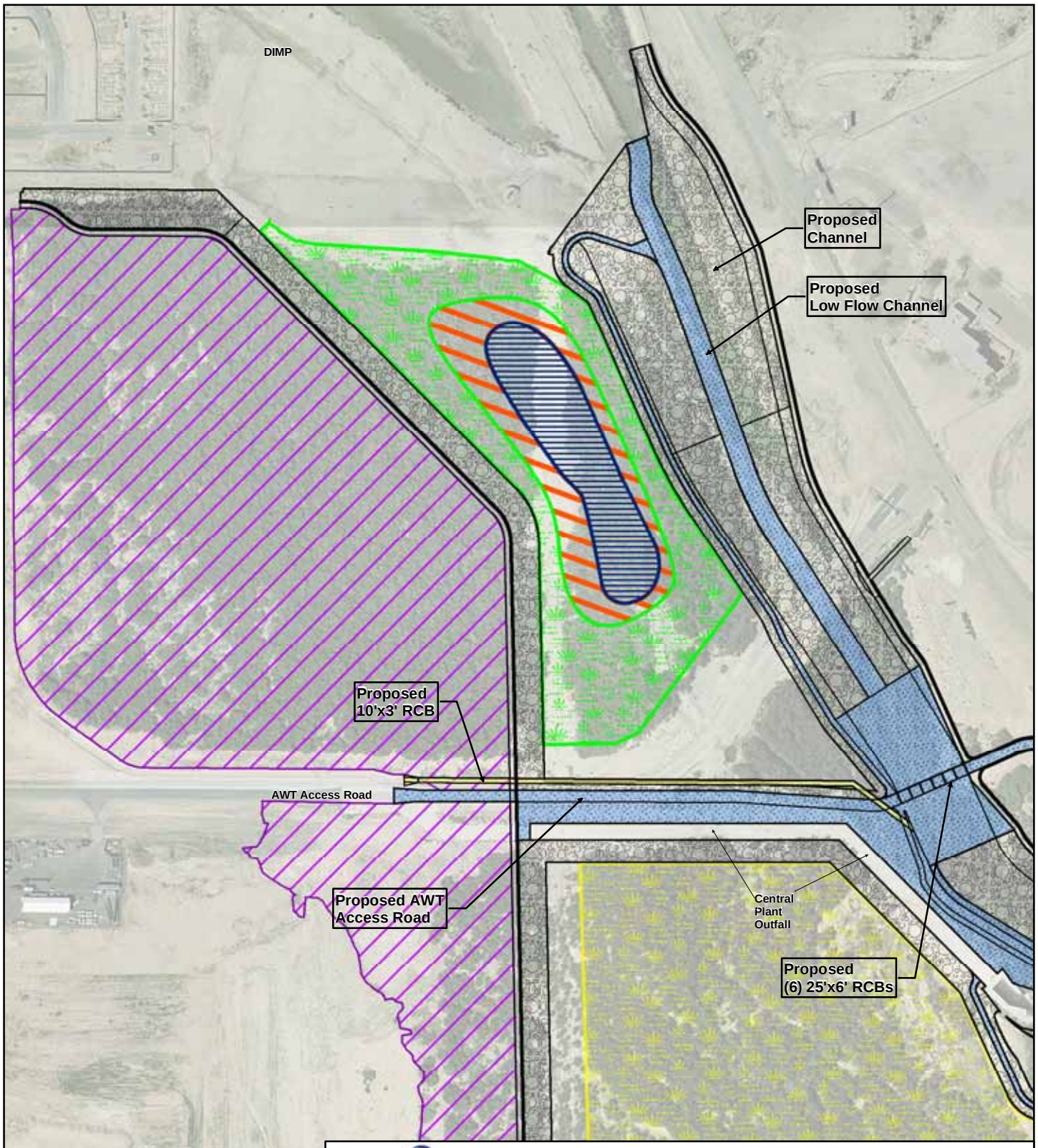

CLARK COUNTY WATER RECLAMATION DISTRICT
LAS VEGAS WASH CHANNELIZATION IMPROVEMENTS

Legend

- CHANNELIZATION IMPROVEMENTS
- CCWRD PROPOSED RIPARIAN VEGETATION (5.96 ACRES)
- CCWRD PROPOSED WETLANDS VEGETATION (2.09 ACRES)
- OPEN WATER (1.88 ACRES)
- PROPOSED CONCRETE
- PROPOSED RIPRAP
- FILL AREA
- SNWA PROPOSED MITIGATION AREA (29.02 ACRES)

N

0 150 300 600

Feet

1 inch equals 300 feet

PBSJ

FIGURE 6 : CCWRD WETLAND MITIGATION EXHIBIT

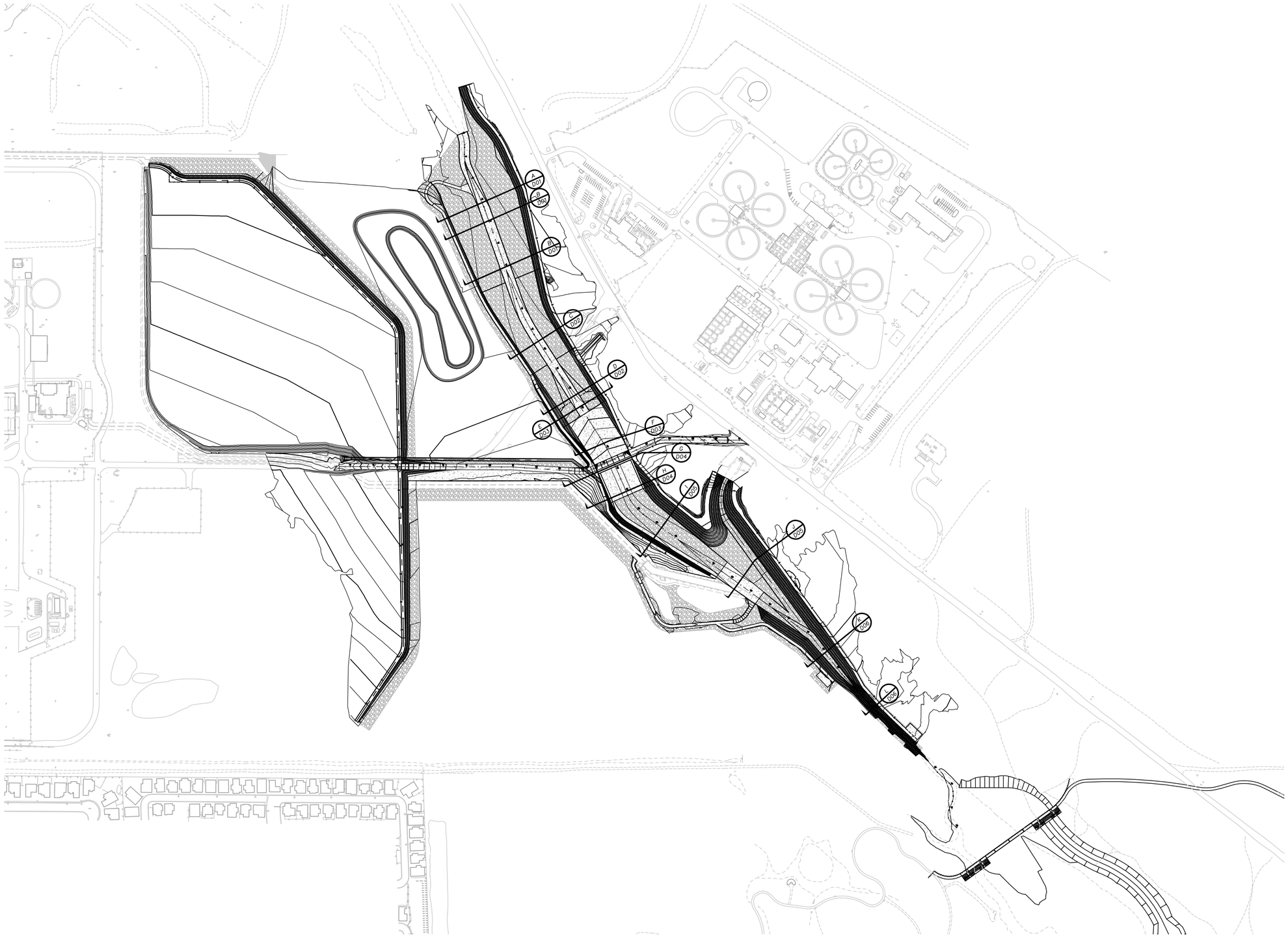

Avoid cutting underground utility lines. It's costly.
Call before you Dig
1-800-227-2600
Nevada Power Environment and Safety Services Department

Avoid cutting overhead utility lines. It's costly.
Call before you Overhead
1-702-593-6111
Nevada Power Environment and Safety Services Department

N

PBSJ

REV.	DATE	BY	DESCRIPTION

DESIGNED H. DESAI	JOB No. 511516
DRAWN M. D'ALESSANDRO	DRAWING No. 1516-000-G01
CHECKED M. BAIRD	SCALE HORIZ: 1"=400' VERT: N/A
DATE APRIL 2006	

PRELIMINARY 30% APRIL 2006 NOT FOR CONSTRUCTION

Clark County Water Reclamation DISTRICT
The "Clean Water Team"

PBSJ
2270 Corporate Circle Drive
Suite 100
Henderson, Nevada 89074
Telephone: 702/263-7275
Fax: 702/263-7200
ENGINEERING · PLANNING · SURVEYING · CONSTRUCTION SERVICES

CLARK COUNTY WATER RECLAMATION DISTRICT

LAS VEGAS WASH CHANNELIZATION IMPROVEMENTS

GRADING PLAN SHEET INDEX

BID NO. XXXXXX

DRAWING NO. G01

SHEET NO. 03 OF 31

P:\Projects\511516\404 Permit\1516-000-G01 4-12-06 02:00pm 18824 XREFS: 1516-SITE; 1516-BDR; 1516-MP; 1516-GRADING; CROSS-SECTIONS; GRADING90percent_temp

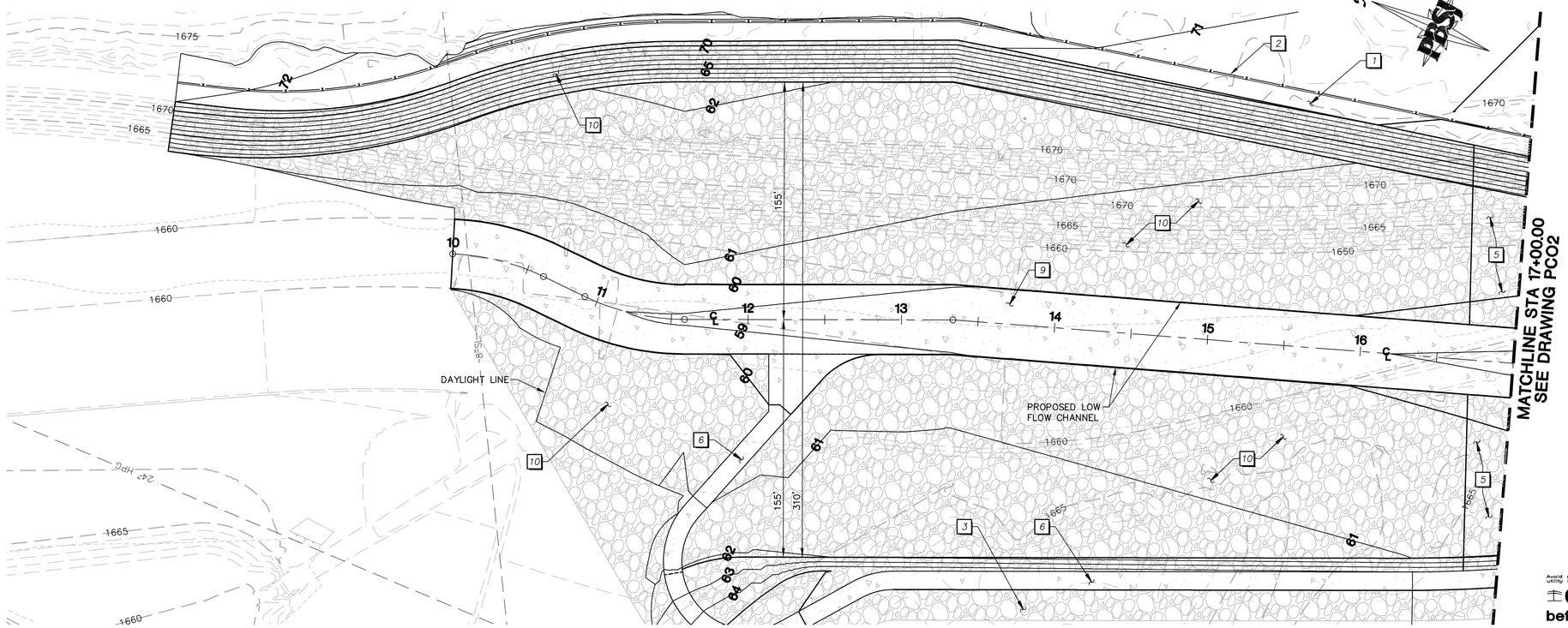

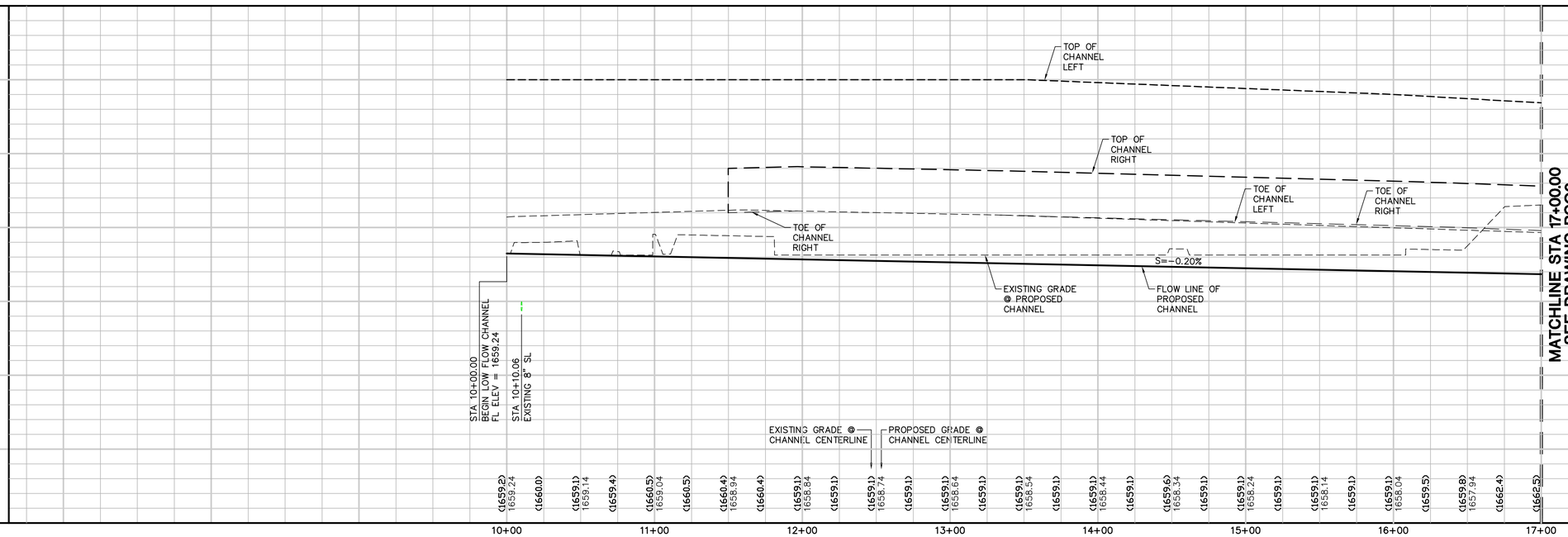

Avoid cutting underground utility lines. It's costly.
Call before you Dig
1-800-227-2600
Nevada Power Environment and Safety Services Department

Avoid cutting overhead utility lines. It's costly.
Call before you Overhead
1-702-593-6111
Nevada Power Environment and Safety Services Department

KEY NOTES

1. CONSTRUCT 12" TYPE II AGGREGATE BASE ACCESS ROAD.
2. CONSTRUCT 6' CHAIN LINK FENCE.
3. INSTALL RIP-RAP PROTECTION D_{50} =18" H=3' WITH 12" TYPE II AGGREGATE BASE.
4. CONSTRUCT RIP-RAP TOE PROTECTION PER DETAIL U DWG D09
5. INSTALL RIP-RAP PROTECTION D_{50} =24" H=4' WITH 12" TYPE II AGGREGATE BASE AND FILTER FABRIC.
6. CONSTRUCT 6" CONCRETE ACCESS ROAD WITH 12" TYPE II AGGREGATE BASE.
7. INSTALL RIP-RAP TOE PROTECTION PER DETAIL V DWG D09.
8. CONSTRUCT 7" REINFORCED CONCRETE WITH 24" TYPE II AGGREGATE BASE.
9. INSTALL REINFORCED CONCRETE LOW FLOW CHANNEL PER DETAIL X DWG D09.
10. INSTALL RIP-RAP PROTECTION D_{50} =18" H=3' WITH 12" TYPE II AGGREGATE BASE AND FILTER FABRIC.
11. INSTALL GROUTED RIP-RAP PROTECTION D_{50} =18" H=3'
12. INSTALL (6) 25'x6' RCBs.
13. INSTALL 10'x3' RCB AT 0.75% SLOPE.
14. REMOVE EXISTING 36" ERW.
15. INSTALL 36" ERW ALONG WITH DEWATERING SLUDGE LINES.
16. INSTALL GROUTED RIP-RAP PROTECTION D_{50} =24" H=4' WITH 12" TYPE II AGGREGATE BASE AND FILTER FABRIC.

GRAPHIC SCALE
40 0 20 40 80 160
(IN FEET)
HORIZ 1 inch = 40ft.
VERTICAL 1 inch = 4 ft.

BASIS OF BEARING

THE BASIS OF BEARINGS FOR THIS PROJECT IS GRID NORTH AS DEFINED BY THE NEVADA COORDINATE SYSTEM OF 1983 (NCS83), EAST ZONE, (2701).

BENCHMARK

CLARK COUNTY BENCHMARK No. 6C12 21SWS:
RIVET AND SQUARE ALUMINUM PLATE IN THE TOP OF CURB, NORTHEAST CORNER OF TROPICANA AVE AND NELLIS BLVD NEAR THE PC OF TROPICANA AVE.
ELEVATION = 522.149m (NAVD'88)
= 1712.76ft (NAVD'88)

CAUTION:
EXISTING UTILITIES ARE LOCATED ON THE PLANS FROM A SEARCH OF AVAILABLE RECORDS. CONTRACTOR TO VERIFY LOCATIONS AND DEPTHS PRIOR TO CONSTRUCTION.

SHEET INDEX

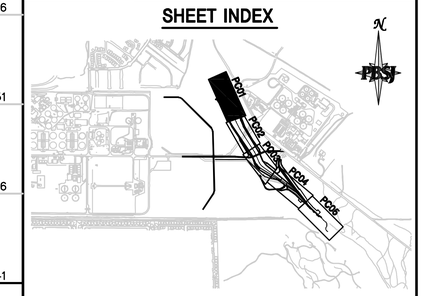

REV.	DATE	BY	DESCRIPTION

DESIGNED H. DESAI	JOB No. 511516
DRAWN M. D'ALESSANDRO	DRAWING No. 1516-000-PC01
CHECKED M. BAIRD	SCALE HORIZ: 1"=40' VERT: 1"=4'
DATE APRIL 2006	

PRELIMINARY 30% APRIL 2006 NOT FOR CONSTRUCTION

Clark County Water Reclamation DISTRICT
The "Clean Water Team"

PBSJ
2270 Corporate Circle Drive Suite 100 Henderson, Nevada 89074 Telephone: 702/263-7275 Fax: 702/263-7200
ENGINEERING · PLANNING · SURVEYING · CONSTRUCTION SERVICES

CLARK COUNTY WATER RECLAMATION DISTRICT
LAS VEGAS WASH CHANNELIZATION IMPROVEMENTS
CHANNEL PLAN AND PROFILE
STA 10+00 TO STA 17+00

BID NO. XXXXXX
DRAWING NO. PC01
SHEET NO. 16 OF 31

P:\Projects\511516\404 Permit\1516-000-PC01 4-12-06 12:38pm 18824 XREFS: 1516-SITE; 1516-CONTOURS; 1516-UTIL; 1516-BDR; 1516-GRADING; 1516-MP; 1516-MP LABEL; 1516-PROF glact; glact; glact;

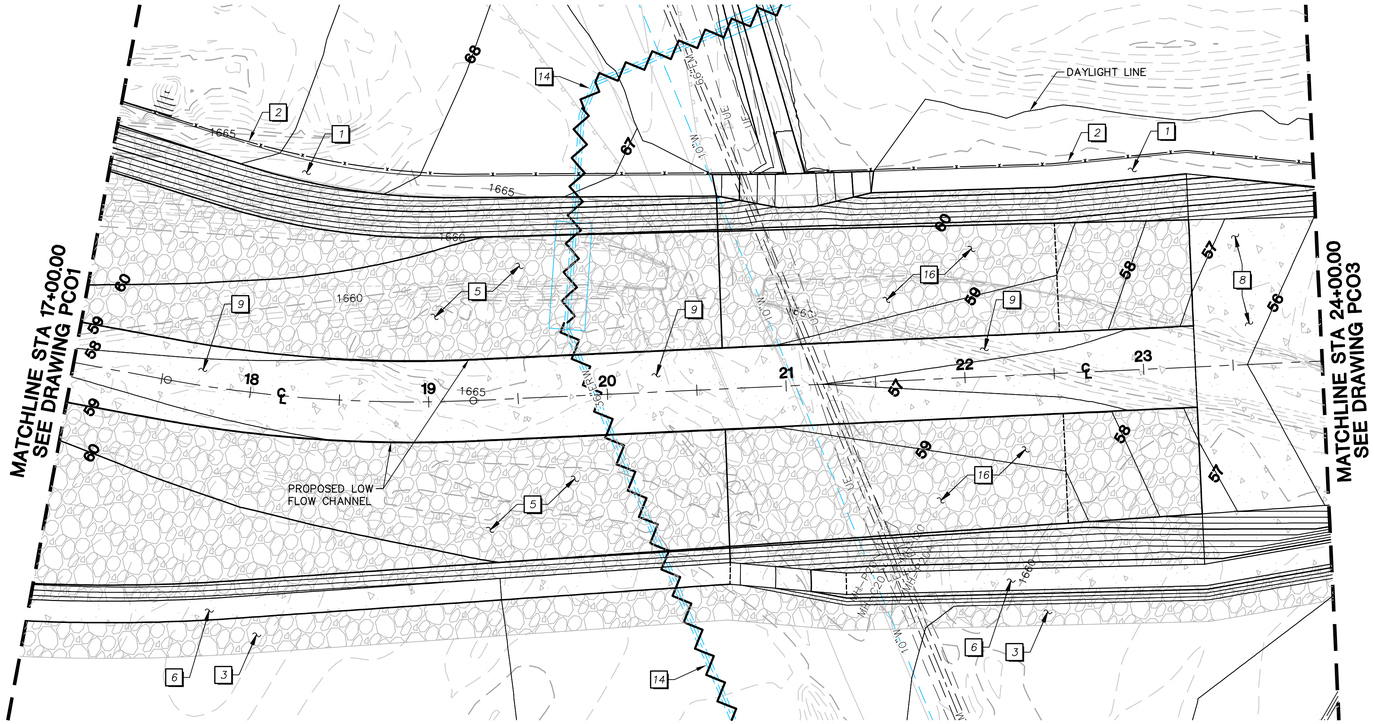

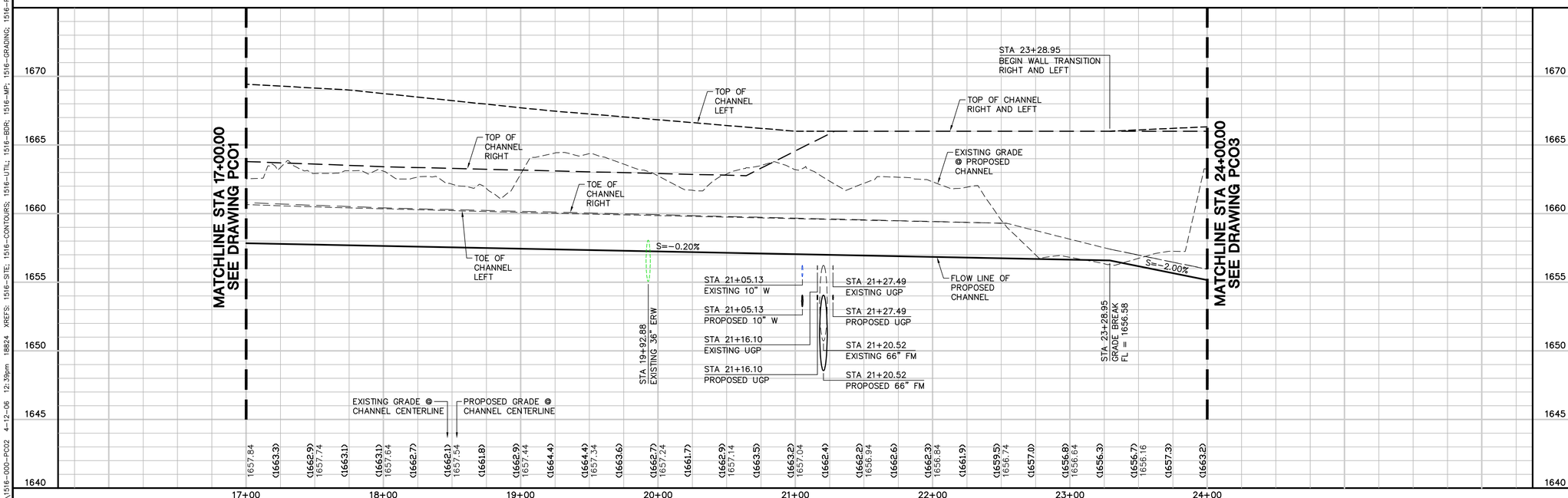

KEY NOTES

1. CONSTRUCT 12" TYPE II AGGREGATE BASE ACCESS ROAD.
2. CONSTRUCT 6' CHAIN LINK FENCE.
3. INSTALL RIP-RAP PROTECTION D_{50} =18" H=3' WITH 12" TYPE II AGGREGATE BASE.
4. CONSTRUCT RIP-RAP TOE PROTECTION PER DETAIL U DWG D09
5. INSTALL RIP-RAP PROTECTION D_{50} =24" H=4' WITH 12" TYPE II AGGREGATE BASE AND FILTER FABRIC.
6. CONSTRUCT 6" CONCRETE ACCESS ROAD WITH 12" TYPE II AGGREGATE BASE.
7. INSTALL RIP-RAP TOE PROTECTION PER DETAIL V DWG D09.
8. CONSTRUCT 7" REINFORCED CONCRETE WITH 24" TYPE II AGGREGATE BASE.
9. INSTALL REINFORCED CONCRETE LOW FLOW CHANNEL PER DETAIL X DWG D09.
10. INSTALL RIP-RAP PROTECTION D_{50} =18" H=3' WITH 12" TYPE II AGGREGATE BASE AND FILTER FABRIC.
11. INSTALL GROUTED RIP-RAP PROTECTION D_{50} =18" H=3'
12. INSTALL (6) 25'x6' RCBs.
13. INSTALL 10'x3' RCB AT 0.75% SLOPE.
14. REMOVE EXISTING 36" ERW.
15. INSTALL 36" ERW ALONG WITH DEWATERING SLUDGE LINES.
16. INSTALL GROUTED RIP-RAP PROTECTION D_{50} =24" H=4' WITH 12" TYPE II AGGREGATE BASE AND FILTER FABRIC.

GRAPHIC SCALE

40 0 20 40 80 160

(IN FEET)

HORIZ 1 inch = 40ft.
VERTICAL 1 inch = 4 ft.

BASIS OF BEARING

THE BASIS OF BEARINGS FOR THIS PROJECT IS GRID NORTH AS DEFINED BY THE NEVADA COORDINATE SYSTEM OF 1983 (NCS83), EAST ZONE, (2701).

BENCHMARK

CLARK COUNTY BENCHMARK No. 6C12 21SWS:
RIVET AND SQUARE ALUMINUM PLATE IN THE TOP OF CURB, NORTHEAST CORNER OF TROPICANA AVE AND NELLIS BLVD NEAR THE PC OF TROPICANA AVE.
ELEVATION = 522.149m (NAVD'88)
= 1712.76ft (NAVD'88)

CAUTION:
EXISTING UTILITIES ARE LOCATED ON THE PLANS FROM A SEARCH OF AVAILABLE RECORDS. CONTRACTOR TO VERIFY LOCATIONS AND DEPTHS PRIOR TO CONSTRUCTION.

SHEET INDEX

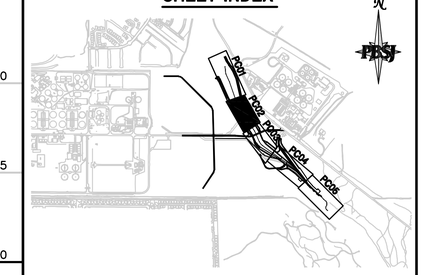

Avoid cutting underground utility lines. It's costly.
Call before you Dig
1-800-227-2600
Nevada Power Environment and Safety Services Department

Avoid cutting overhead utility lines. It's costly.
Call before you Overhead
1-702-593-6111
Nevada Power Environment and Safety Services Department

REV.	DATE	BY	DESCRIPTION

DESIGNED H. DESAI	JOB No. 511516
DRAWN M. D'ALESSANDRO	DRAWING No. 1516-000-PC02
CHECKED M. BAIRD	SCALE HORIZ: 1"=40' VERT: 1"=4'
DATE APRIL 2006	

PRELIMINARY 30% APRIL 2006 NOT FOR CONSTRUCTION

Clark County Water Reclamation DISTRICT
The "Clean Water Team"

PBSJ
2270 Corporate Circle Drive
Suite 100
Henderson, Nevada 89074
Telephone: 702/263-7275
Fax: 702/263-7200
ENGINEERING · PLANNING · SURVEYING · CONSTRUCTION SERVICES

CLARK COUNTY WATER RECLAMATION DISTRICT

LAS VEGAS WASH CHANNELIZATION IMPROVEMENTS

CHANNEL PLAN AND PROFILE
STA 17+00 TO STA 24+00

BID NO. XXXXXX

DRAWING NO. PC02

SHEET NO. 17 OF 31

P:\Projects\511516\404 Permit\1516-000-PC02 4-12-06 12:39pm 18824 XREFS: 1516-SITE; 1516-CONTOURS; 1516-UTIL; 1516-BDR; 1516-MP; 1516-GRADING; 1516-PROF; 1516-MP LABEL glact; glact; glact;

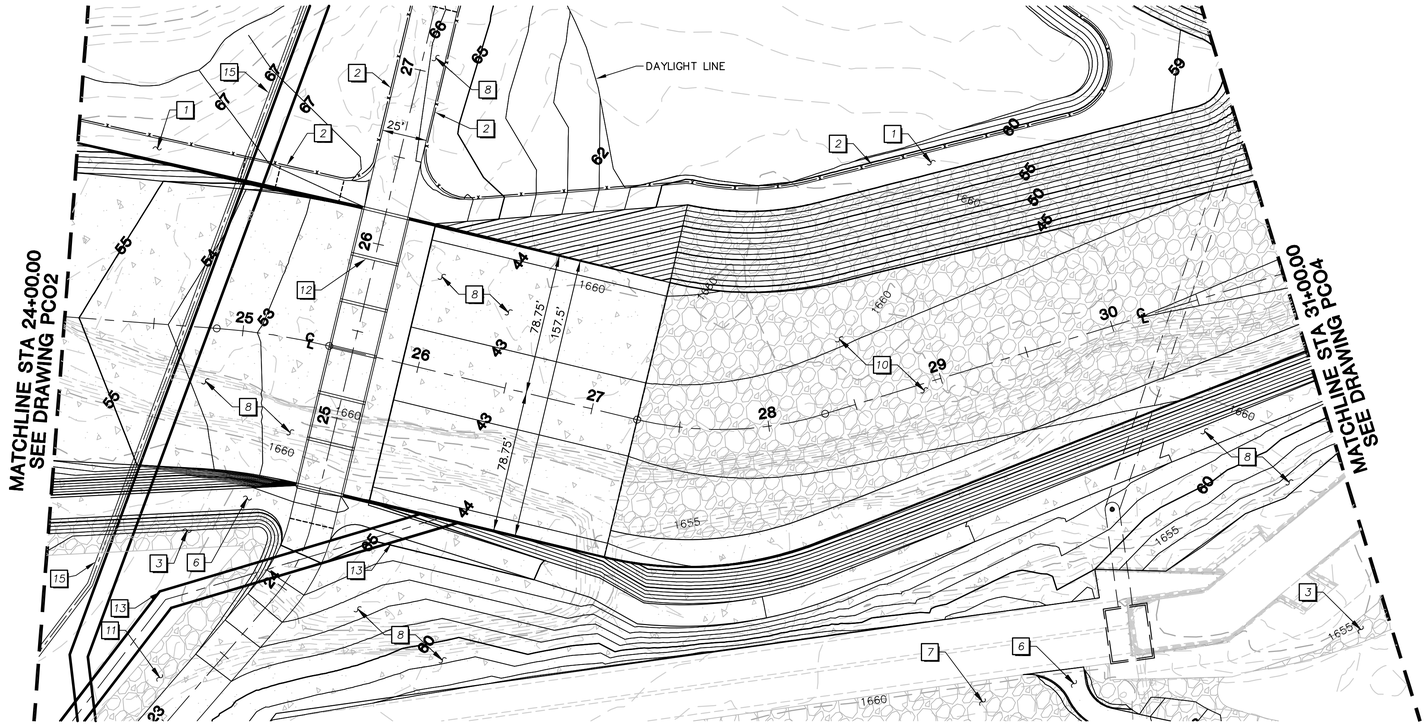

KEY NOTES

1. CONSTRUCT 12" TYPE II AGGREGATE BASE ACCESS ROAD.
2. CONSTRUCT 6' CHAIN LINK FENCE.
3. INSTALL RIP-RAP PROTECTION D_{50} =18" H=3' WITH 12" TYPE II AGGREGATE BASE.
4. CONSTRUCT RIP-RAP TOE PROTECTION PER DETAIL U DWG D09
5. INSTALL RIP-RAP PROTECTION D_{50} =24" H=4' WITH 12" TYPE II AGGREGATE BASE AND FILTER FABRIC.
6. CONSTRUCT 6" CONCRETE ACCESS ROAD WITH 12" TYPE II AGGREGATE BASE.
7. INSTALL RIP-RAP TOE PROTECTION PER DETAIL V DWG D09.
8. CONSTRUCT 7" REINFORCED CONCRETE WITH 24" TYPE II AGGREGATE BASE.
9. INSTALL REINFORCED CONCRETE LOW FLOW CHANNEL PER DETAIL X DWG D09.
10. INSTALL RIP-RAP PROTECTION D_{50} =18" H=3' WITH 12" TYPE II AGGREGATE BASE AND FILTER FABRIC.
11. INSTALL GROUTED RIP-RAP PROTECTION D_{50} =18" H=3'
12. INSTALL (6) 25'x6' RCBs.
13. INSTALL 10'x3' RCB AT 0.75% SLOPE.
14. REMOVE EXISTING 36" ERW.
15. INSTALL 36" ERW ALONG WITH DEWATERING SLUDGE LINES.
16. INSTALL GROUTED RIP-RAP PROTECTION D_{50} =24" H=4' WITH 12" TYPE II AGGREGATE BASE AND FILTER FABRIC.

Avoid cutting underground utility lines. It's costly.
Call before you Dig
1-800-227-2600
Nevada Power Environment and Safety Services Department

Avoid cutting overhead utility lines. It's costly.
Call before you Overhead
1-702-593-6111
Nevada Power Environment and Safety Services Department

GRAPHIC SCALE
40 0 20 40 80 160
(IN FEET)
HORIZ 1 inch = 40ft.
VERTICAL 1 inch = 4 ft.

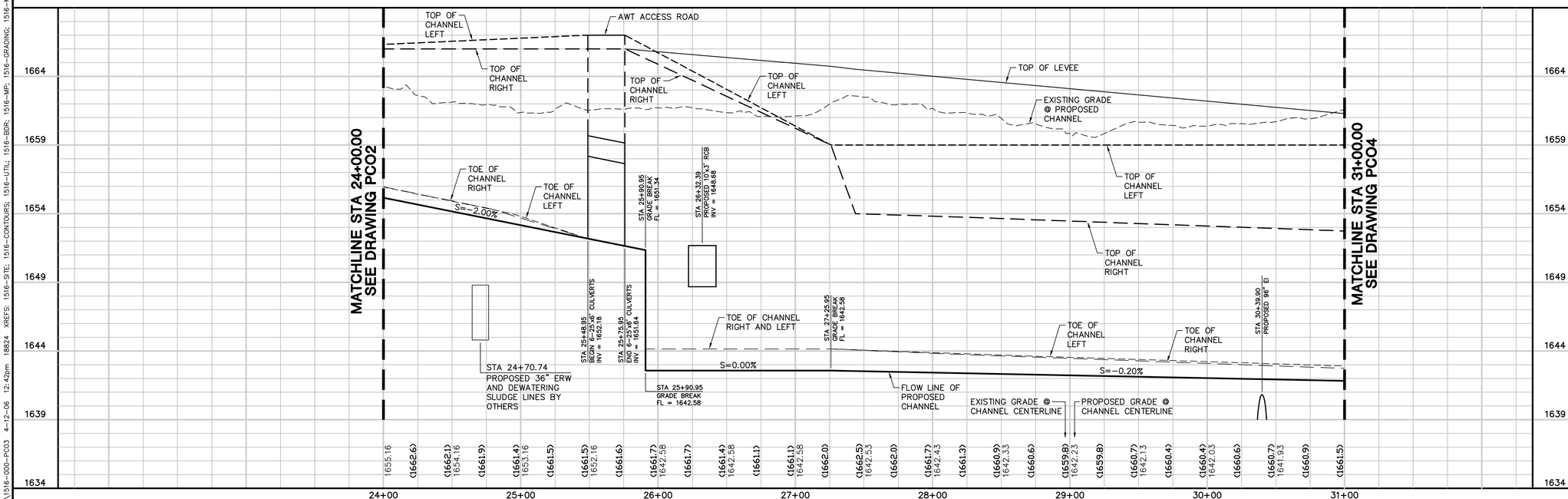

BASIS OF BEARING

THE BASIS OF BEARINGS FOR THIS PROJECT IS GRID NORTH AS DEFINED BY THE NEVADA COORDINATE SYSTEM OF 1983 (NCS83), EAST ZONE, (2701).

BENCHMARK

CLARK COUNTY BENCHMARK No. 6C12 21SWS:
RIVET AND SQUARE ALUMINUM PLATE IN THE TOP OF CURB, NORTHEAST CORNER OF TROPICANA AVE AND NELLIS BLVD NEAR THE PC OF TROPICANA AVE.
ELEVATION = 522.149m (NAVD'88)
= 1712.76ft (NAVD'88)

CAUTION:
EXISTING UTILITIES ARE LOCATED ON THE PLANS FROM A SEARCH OF AVAILABLE RECORDS. CONTRACTOR TO VERIFY LOCATIONS AND DEPTHS PRIOR TO CONSTRUCTION.

SHEET INDEX

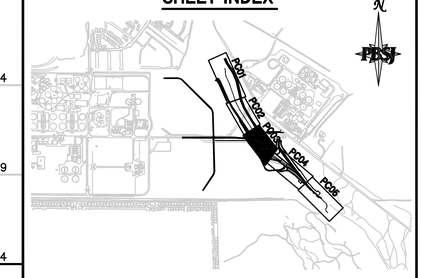

REV.	DATE	BY	DESCRIPTION

DESIGNED H. DESAI	JOB No. 511516
DRAWN M. D'ALESSANDRO	DRAWING No. 1516-000-PC03
CHECKED M. BAIRD	SCALE HORIZ: 1"=40' VERT: 1"=4'
DATE APRIL 2006	

PRELIMINARY 30% APRIL 2006 NOT FOR CONSTRUCTION

Clark County Water Reclamation DISTRICT
The "Clean Water Team"

PBSJ
2270 Corporate Circle Drive
Suite 100
Henderson, Nevada 89074
Telephone: 702/263-7275
Fax: 702/263-7200
ENGINEERING · PLANNING · SURVEYING · CONSTRUCTION SERVICES

CLARK COUNTY WATER RECLAMATION DISTRICT
LAS VEGAS WASH CHANNELIZATION IMPROVEMENTS
CHANNEL PLAN AND PROFILE
STA 24+00 TO STA 31+00

BID NO. XXXXXX
DRAWING NO. PC03
SHEET NO. 18 OF 31

P:\Projects\511516\404 Permit\1516-000-PC03 4-12-06 12:42pm 18824 XREFS: 1516-SITE; 1516-CONTOURS; 1516-UTIL; 1516-BDR; 1516-MP; 1516-GRADING; 1516-MP LABEL; 1516-PROF glact; glact;

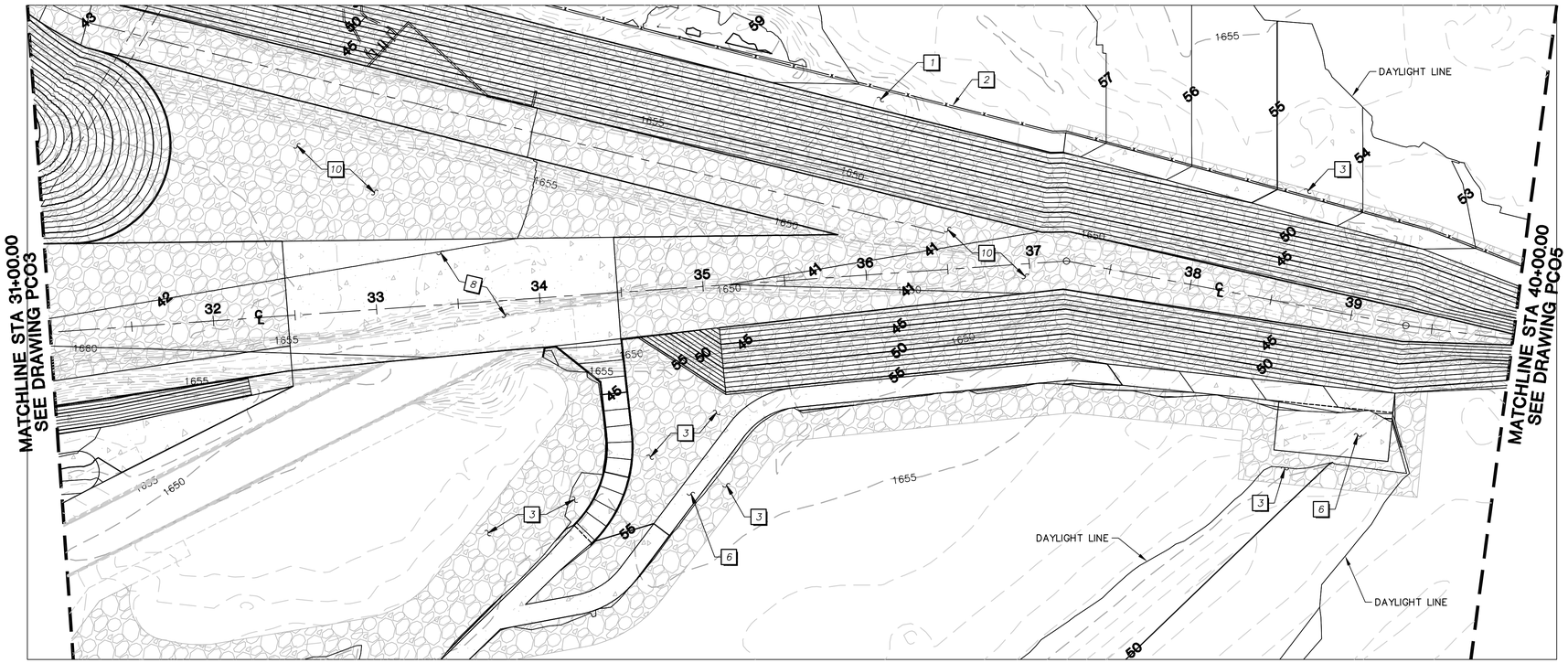

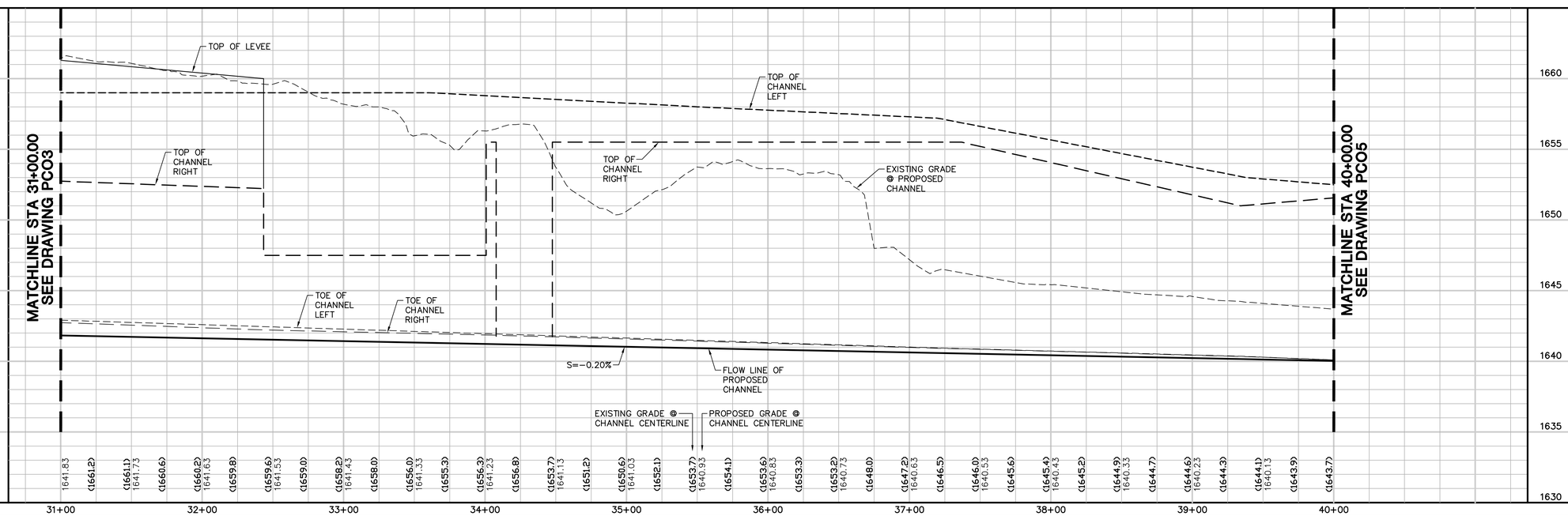

KEY NOTES

1. CONSTRUCT 12" TYPE II AGGREGATE BASE ACCESS ROAD.
2. CONSTRUCT 6' CHAIN LINK FENCE.
3. INSTALL RIP-RAP PROTECTION D_{50} =18" H=3' WITH 12" TYPE II AGGREGATE BASE.
4. CONSTRUCT RIP-RAP TOE PROTECTION PER DETAIL U DWG D09
5. INSTALL RIP-RAP PROTECTION D_{50} =24" H=4' WITH 12" TYPE II AGGREGATE BASE AND FILTER FABRIC.
6. CONSTRUCT 6" CONCRETE ACCESS ROAD WITH 12" TYPE II AGGREGATE BASE.
7. INSTALL RIP-RAP TOE PROTECTION PER DETAIL V DWG D09.
8. CONSTRUCT 7" REINFORCED CONCRETE WITH 24" TYPE II AGGREGATE BASE.
9. INSTALL REINFORCED CONCRETE LOW FLOW CHANNEL PER DETAIL X DWG D09.
10. INSTALL RIP-RAP PROTECTION D_{50} =18" H=3' WITH 12" TYPE II AGGREGATE BASE AND FILTER FABRIC.
11. INSTALL GROUTED RIP-RAP PROTECTION D_{50} =18" H=3'
12. INSTALL (6) 25'x6' RCBs.
13. INSTALL 10'x3' RCB AT 0.75% SLOPE.
14. REMOVE EXISTING 36" ERW.
15. INSTALL 36" ERW ALONG WITH DEWATERING SLUDGE LINES.
16. INSTALL GROUTED RIP-RAP PROTECTION D_{50} =24" H=4' WITH 12" TYPE II AGGREGATE BASE AND FILTER FABRIC.

GRAPHIC SCALE

40 0 20 40 80 160

(IN FEET)

HORIZ 1 inch = 40ft.
VERTICAL 1 inch = 4 ft.

BASIS OF BEARING

THE BASIS OF BEARINGS FOR THIS PROJECT IS GRID NORTH AS DEFINED BY THE NEVADA COORDINATE SYSTEM OF 1983 (NCS83), EAST ZONE, (2701).

BENCHMARK

CLARK COUNTY BENCHMARK No. 6C12 21SWS:
RIVET AND SQUARE ALUMINUM PLATE IN THE TOP OF CURB, NORTHEAST CORNER OF TROPICANA AVE AND NELLIS BLVD NEAR THE PC OF TROPICANA AVE.
ELEVATION = 522.149m (NAVD'88)
= 1712.76ft (NAVD'88)

CAUTION:
EXISTING UTILITIES ARE LOCATED ON THE PLANS FROM A SEARCH OF AVAILABLE RECORDS. CONTRACTOR TO VERIFY LOCATIONS AND DEPTHS PRIOR TO CONSTRUCTION.

SHEET INDEX

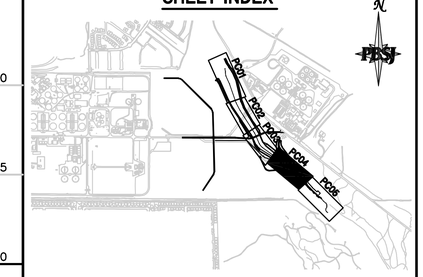

Avoid cutting underground utility lines. It's costly.
Call before you Dig
1-800-227-2600
Nevada Power Environment and Safety Services Department

Avoid cutting overhead utility lines. It's costly.
Call before you Overhead
1-702-593-6111
Nevada Power Environment and Safety Services Department

REV.	DATE	BY	DESCRIPTION

DESIGNED H. DESAI	JOB No. 511516
DRAWN M. D'ALESSANDRO	DRAWING No. 1516-000-PC04
CHECKED M. BAIRD	SCALE HORIZ: 1"=40' VERT: 1"=4'
DATE APRIL 2006	

PRELIMINARY 30% APRIL 2006 NOT FOR CONSTRUCTION

Clark County Water Reclamation DISTRICT
The "Clean Water Team"

PBSJ
2270 Corporate Circle Drive Suite 100
Henderson, Nevada 89074
Telephone: 702/263-7275
Fax: 702/263-7200
ENGINEERING · PLANNING · SURVEYING · CONSTRUCTION SERVICES

CLARK COUNTY WATER RECLAMATION DISTRICT

LAS VEGAS WASH CHANNELIZATION IMPROVEMENTS

CHANNEL PLAN AND PROFILE
STA 31+00 TO STA 40+00

BID NO. XXXXXX

DRAWING NO. PC04

SHEET NO. 19 OF 31

P:\Projects\511516\404 Permit\1516-000-PC04 4-12-06 12:43pm 18824 XREFS: 1516-SITE; 1516-CONTOURS; 1516-UTIL; 1516-BDR; 1516-MP; 1516-GRADING; 1516-MP LABEL; 1516-PROF glact; glact;

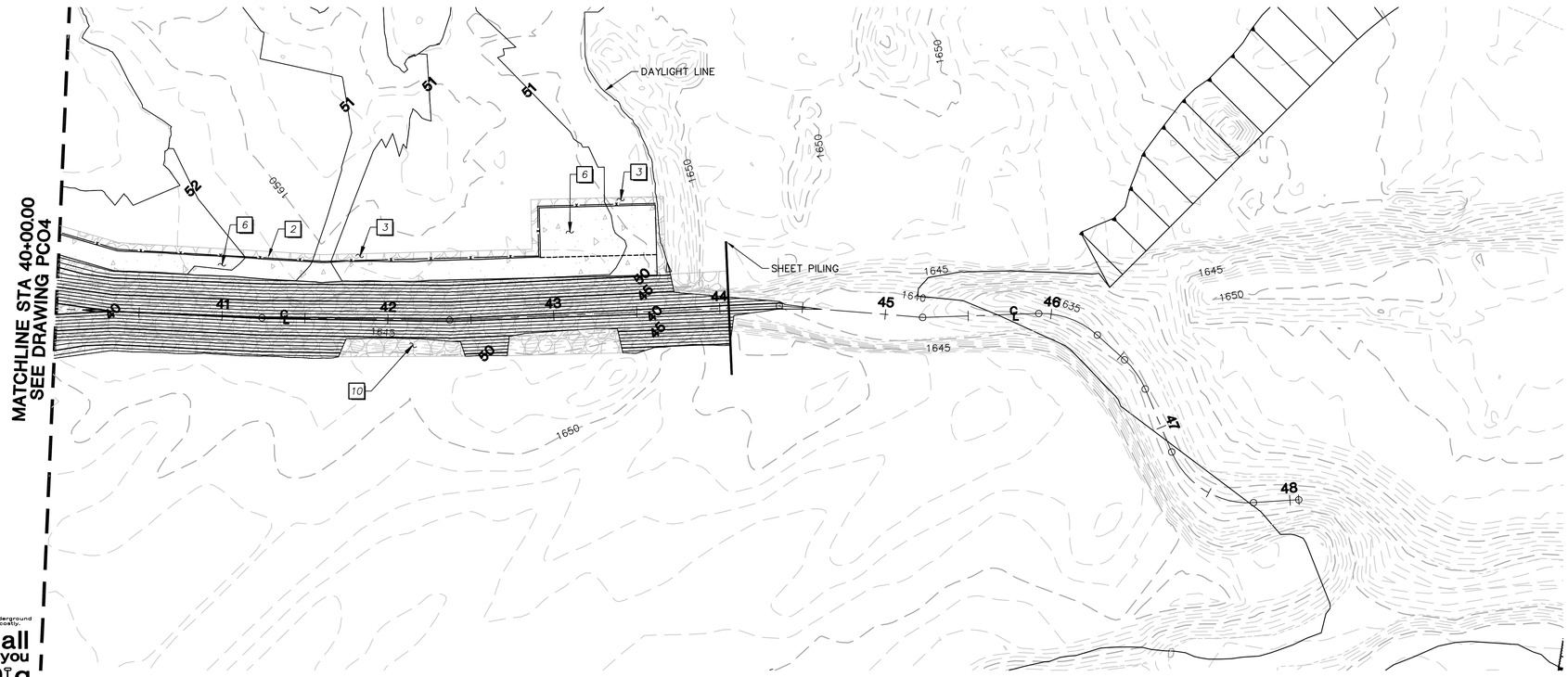

Avoid cutting underground utility lines. It's costly.
Call before you Dig
1-800-227-2600
Nevada Power Environment and Safety Services Department

Avoid cutting overhead utility lines. It's costly.
Call before you Overhead
1-702-593-6111
Nevada Power Environment and Safety Services Department

KEY NOTES

1. CONSTRUCT 12" TYPE II AGGREGATE BASE ACCESS ROAD.
2. CONSTRUCT 6' CHAIN LINK FENCE.
3. INSTALL RIP-RAP PROTECTION D_{50} =18" H=3' WITH 12" TYPE II AGGREGATE BASE.
4. CONSTRUCT RIP-RAP TOE PROTECTION PER DETAIL U DWG D09
5. INSTALL RIP-RAP PROTECTION D_{50} =24" H=4' WITH 12" TYPE II AGGREGATE BASE AND FILTER FABRIC.
6. CONSTRUCT 6" CONCRETE ACCESS ROAD WITH 12" TYPE II AGGREGATE BASE.
7. INSTALL RIP-RAP TOE PROTECTION PER DETAIL V DWG D09.
8. CONSTRUCT 7" REINFORCED CONCRETE WITH 24" TYPE II AGGREGATE BASE.
9. INSTALL REINFORCED CONCRETE LOW FLOW CHANNEL PER DETAIL X DWG D09.
10. INSTALL RIP-RAP PROTECTION D_{50} =18" H=3' WITH 12" TYPE II AGGREGATE BASE AND FILTER FABRIC.
11. INSTALL GROUTED RIP-RAP PROTECTION D_{50} =18" H=3'
12. INSTALL (6) 25'x6' RCBs.
13. INSTALL 10'x3' RCB AT 0.75% SLOPE.
14. REMOVE EXISTING 36" ERW.
15. INSTALL 36" ERW ALONG WITH DEWATERING SLUDGE LINES.
16. INSTALL GROUTED RIP-RAP PROTECTION D_{50} =24" H=4' WITH 12" TYPE II AGGREGATE BASE AND FILTER FABRIC.

GRAPHIC SCALE
40 0 20 40 80 160
(IN FEET)
HORIZ 1 inch = 40ft.
VERTICAL 1 inch = 4 ft.

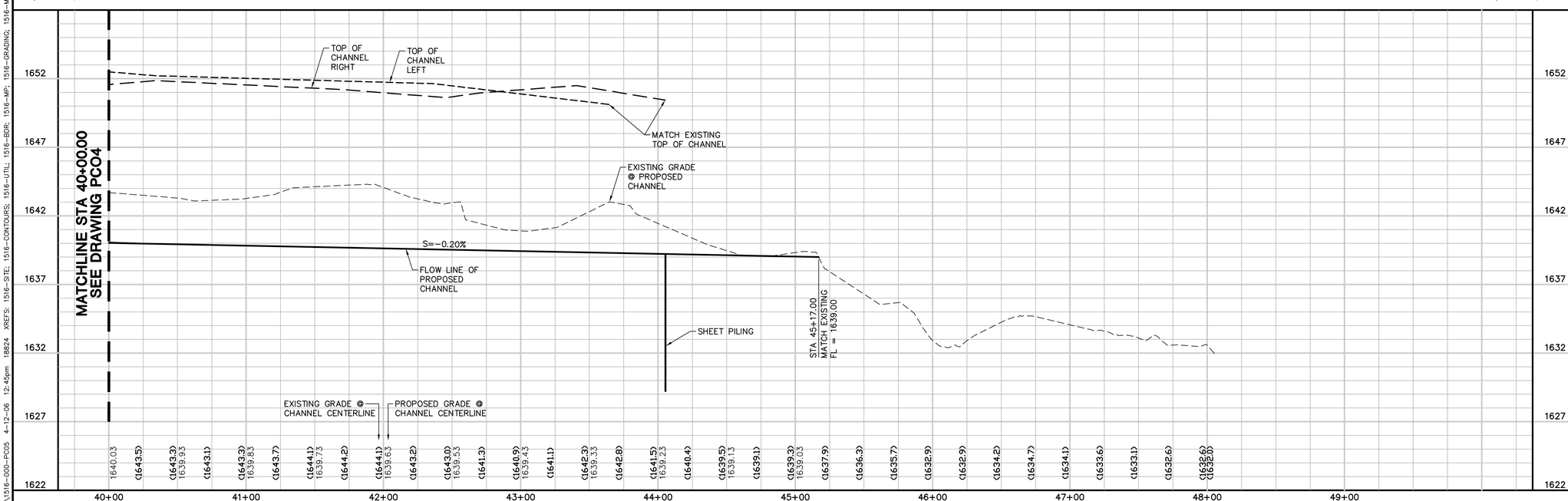

BASIS OF BEARING

THE BASIS OF BEARINGS FOR THIS PROJECT IS GRID NORTH AS DEFINED BY THE NEVADA COORDINATE SYSTEM OF 1983 (NCS83), EAST ZONE, (2701).

BENCHMARK

CLARK COUNTY BENCHMARK No. 6C12 21SWS:
RIVET AND SQUARE ALUMINUM PLATE IN THE TOP OF CURB, NORTHEAST CORNER OF TROPICANA AVE AND NELLIS BLVD NEAR THE PC OF TROPICANA AVE.
ELEVATION = 522.149m (NAVD'88)
= 1712.76ft (NAVD'88)

CAUTION:
EXISTING UTILITIES ARE LOCATED ON THE PLANS FROM A SEARCH OF AVAILABLE RECORDS. CONTRACTOR TO VERIFY LOCATIONS AND DEPTHS PRIOR TO CONSTRUCTION.

SHEET INDEX

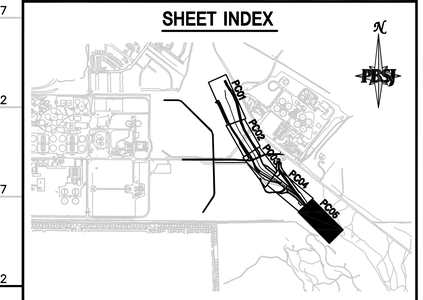

REV.	DATE	BY	DESCRIPTION

DESIGNED H. DESAI	JOB No. 511516
DRAWN M. D'ALESSANDRO	DRAWING No. 1516-000-PC05
CHECKED M. BAIRD	SCALE HORIZ: 1"=40' VERT: 1"=4'
DATE APRIL 2006	

PRELIMINARY 30% APRIL 2006 NOT FOR CONSTRUCTION

Clark County Water Reclamation DISTRICT
The "Clean Water Team"

PBSJ
2270 Corporate Circle Drive
Suite 100
Henderson, Nevada 89074
Telephone: 702/263-7275
Fax: 702/263-7200
ENGINEERING · PLANNING · SURVEYING · CONSTRUCTION SERVICES

CLARK COUNTY WATER RECLAMATION DISTRICT
LAS VEGAS WASH CHANNELIZATION IMPROVEMENTS
CHANNEL PLAN AND PROFILE
STA 40+00 TO STA 48+05.28

BID NO. XXXXXX
DRAWING NO. PC05
SHEET NO. 20 OF 31

P:\Projects\511516\404 Permit\1516-000-PC05 4-12-06 12:45pm 18824 XREFS: 1516-SITE; 1516-CONTOURS; 1516-UTIL; 1516-BDR; 1516-MP; 1516-GRADING; 1516-MP LABEL; 1516-PROF glact; glact;

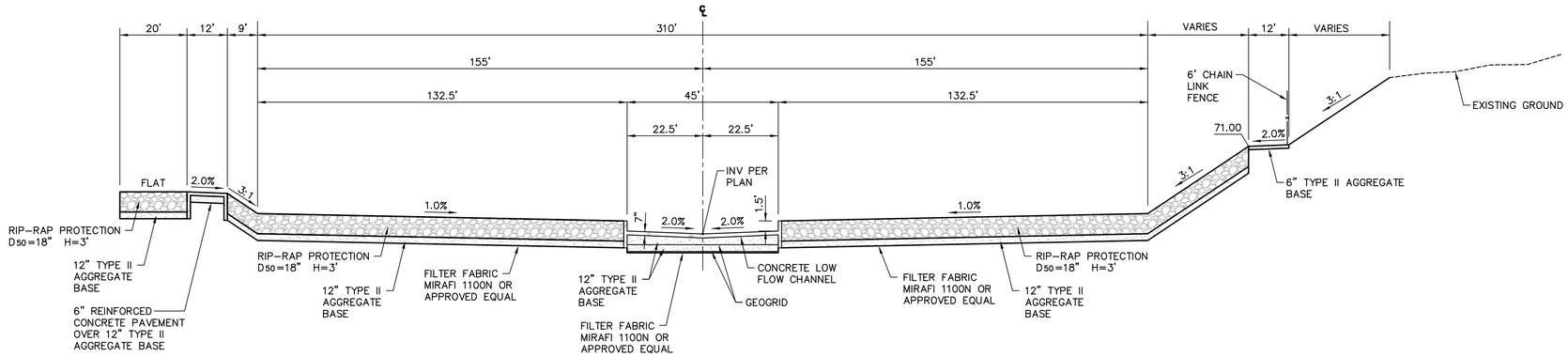

CHANNEL SECTION (A / D01)

SCALE: N.T.S.

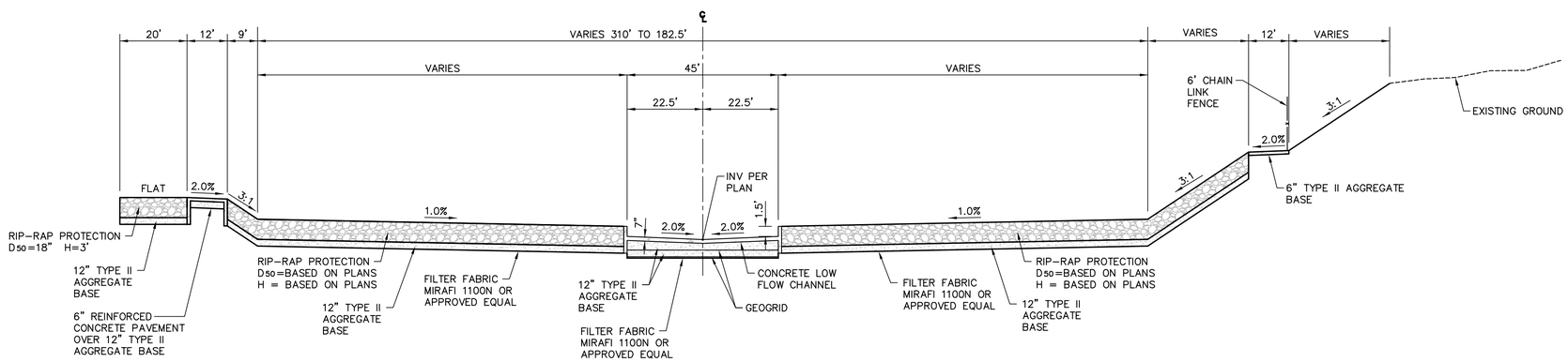

CHANNEL SECTION (B / D01)

SCALE: N.T.S.

REV.	DATE	BY	DESCRIPTION

DESIGNED H. DESAI	JOB No. 511516
DRAWN M. D'ALESSANDRO	DRAWING No. 1516-000-D01
CHECKED M. BAIRD	SCALE HORIZ: N/A VERT: N/A
DATE APRIL 2006	

PRELIMINARY 30% APRIL 2006 NOT FOR CONSTRUCTION

Clark County Water Reclamation DISTRICT — The "Clean Water Team"

PBSJ — ENGINEERING · PLANNING · SURVEYING · CONSTRUCTION SERVICES

2270 Corporate Circle Drive
Suite 100
Henderson, Nevada 89074
Telephone: 702/263-7275
Fax: 702/263-7200

CLARK COUNTY WATER RECLAMATION DISTRICT

LAS VEGAS WASH CHANNELIZATION IMPROVEMENTS

TYPICAL SECTIONS – 1

BID NO. XXXXXX

DRAWING NO. D01

SHEET NO. 23 OF 31

P:\Projects\511516\404 Permit\1516-000-001-009 4-12-06 12:46pm 18824 XREFS: 1516-BDR

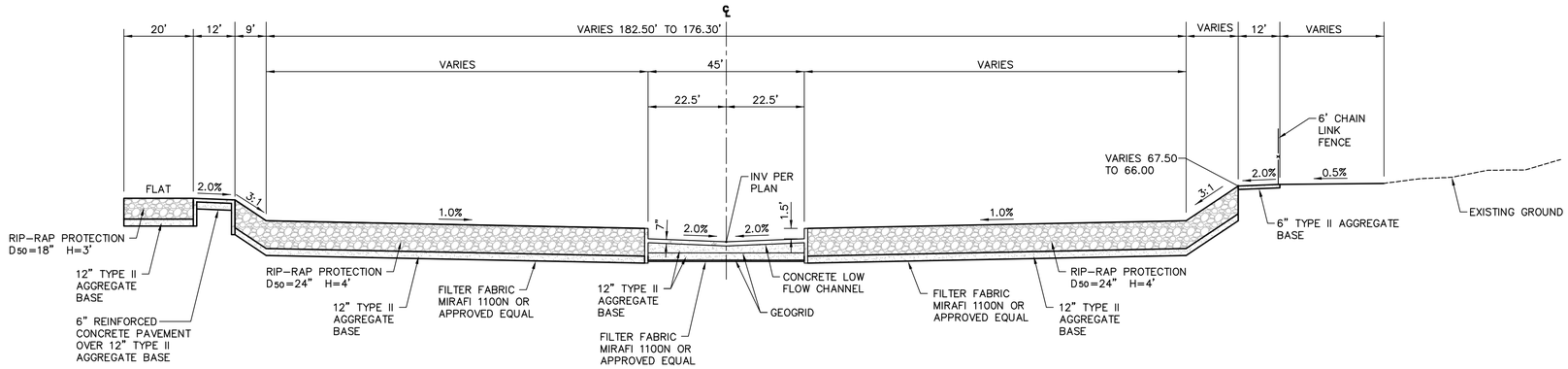

CHANNEL SECTION (C / D02)
SCALE: N.T.S.

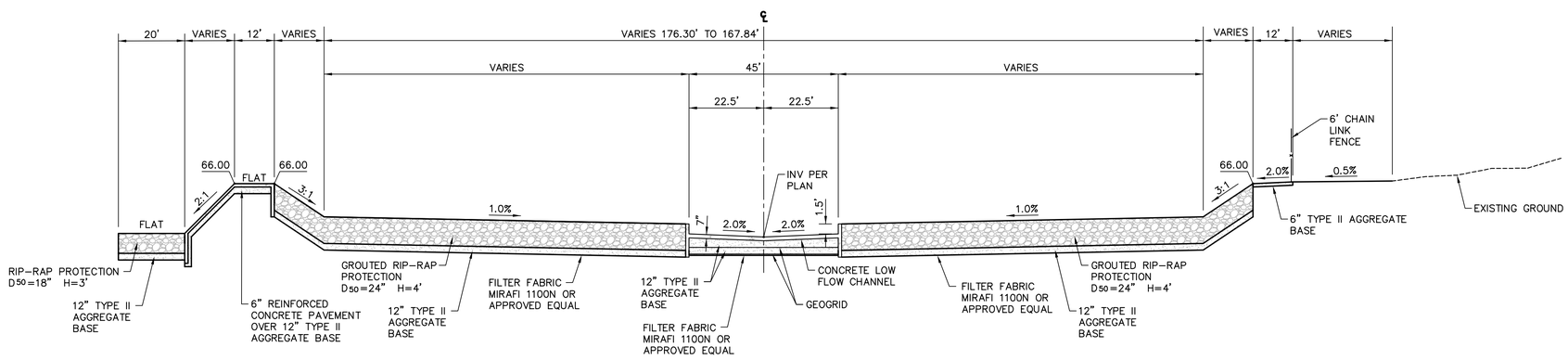

CHANNEL SECTION (D / D02)
SCALE: N.T.S.

REV.	DATE	BY	DESCRIPTION

DESIGNED H. DESAI	JOB No. 511516
DRAWN M. D'ALESSANDRO	DRAWING No. 1516-000-D02
CHECKED M. BAIRD	SCALE HORIZ: N/A VERT: N/A
DATE APRIL 2006	

PRELIMINARY 30% APRIL 2006 NOT FOR CONSTRUCTION

Clark County Water Reclamation DISTRICT
The "Clean Water Team"

PBSJ
2270 Corporate Circle Drive
Suite 100
Henderson, Nevada 89074
Telephone: 702/263-7275
Fax: 702/263-7200
ENGINEERING · PLANNING · SURVEYING · CONSTRUCTION SERVICES

CLARK COUNTY WATER RECLAMATION DISTRICT
LAS VEGAS WASH CHANNELIZATION IMPROVEMENTS
TYPICAL SECTIONS – 2

BID NO. XXXXXX
DRAWING NO. D02
SHEET NO. 24 OF 31

P:\Projects\511516\A04 Permit\1516-000-001-D09 4-12-06 12:47pm 18824 XREFS: 1516-BDR

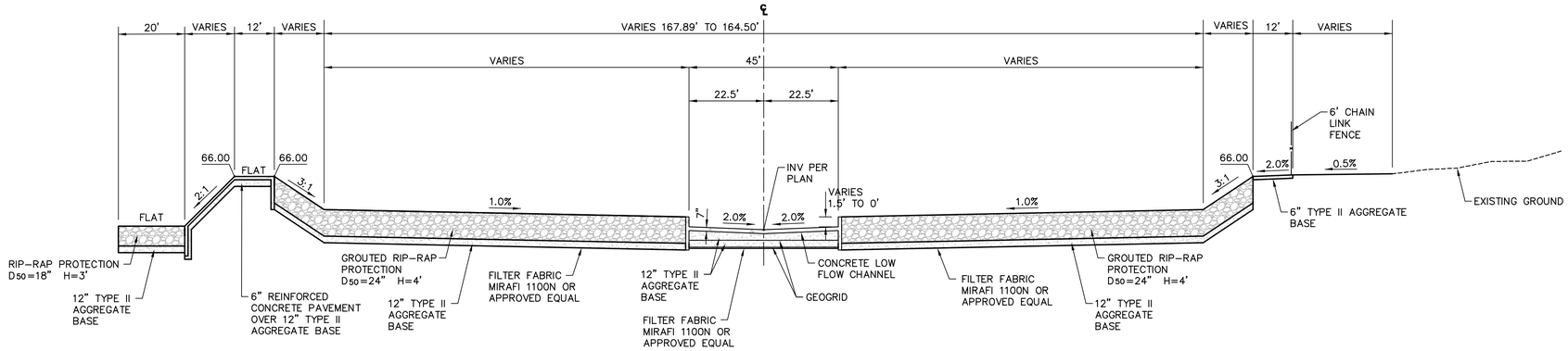

CHANNEL SECTION E / D03

SCALE: N.T.S.

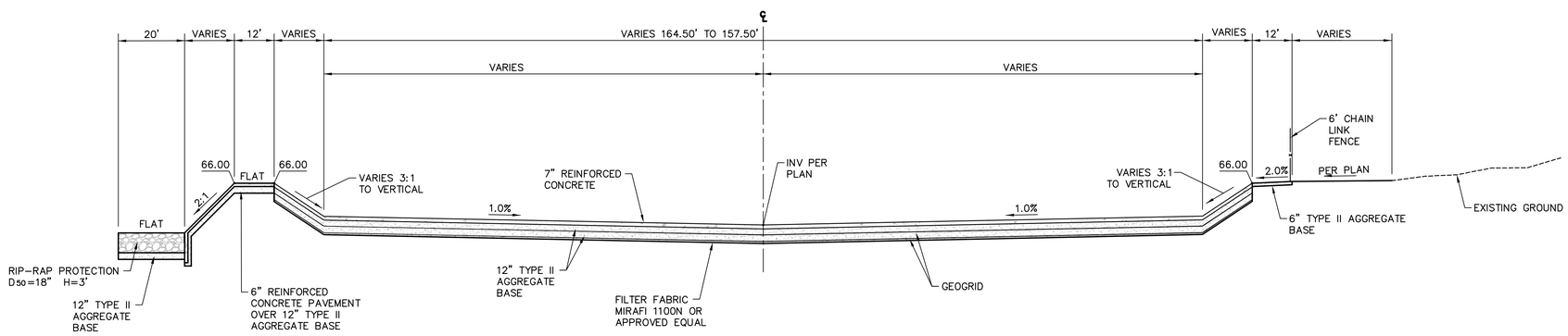

CHANNEL SECTION F / D03

SCALE: N.T.S.

REV.	DATE	BY	DESCRIPTION

DESIGNED H. DESAI	JOB No. 511516
DRAWN M. D'ALESSANDRO	DRAWING No. 1516-000-D03
CHECKED M. BAIRD	SCALE HORIZ: N/A VERT: N/A
DATE APRIL 2006	

PRELIMINARY 30% APRIL 2006 NOT FOR CONSTRUCTION

Clark County Water Reclamation DISTRICT
The "Clean Water Team"

PBSJ
2270 Corporate Circle Drive
Suite 100
Henderson, Nevada 89074
Telephone: 702/263-7275
Fax: 702/263-7200
ENGINEERING · PLANNING · SURVEYING · CONSTRUCTION SERVICES

CLARK COUNTY WATER RECLAMATION DISTRICT

LAS VEGAS WASH CHANNELIZATION IMPROVEMENTS

TYPICAL SECTIONS – 3

BID NO. XXXXXX

DRAWING NO. D03

SHEET NO. 25 OF 31

P:\Projects\511516\A04 Permit\1516-000-001-009 4-12-06 12:47pm 18824 XREFS: 1516-BDR

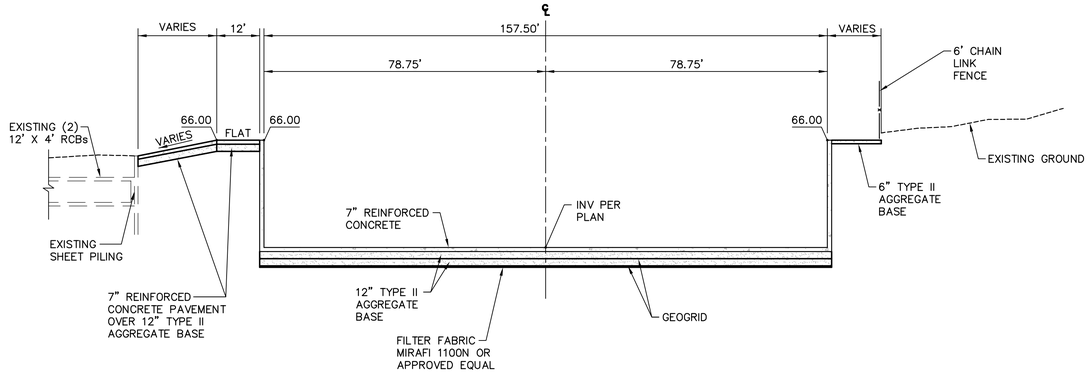

CHANNEL SECTION (G / D04)
SCALE: N.T.S.

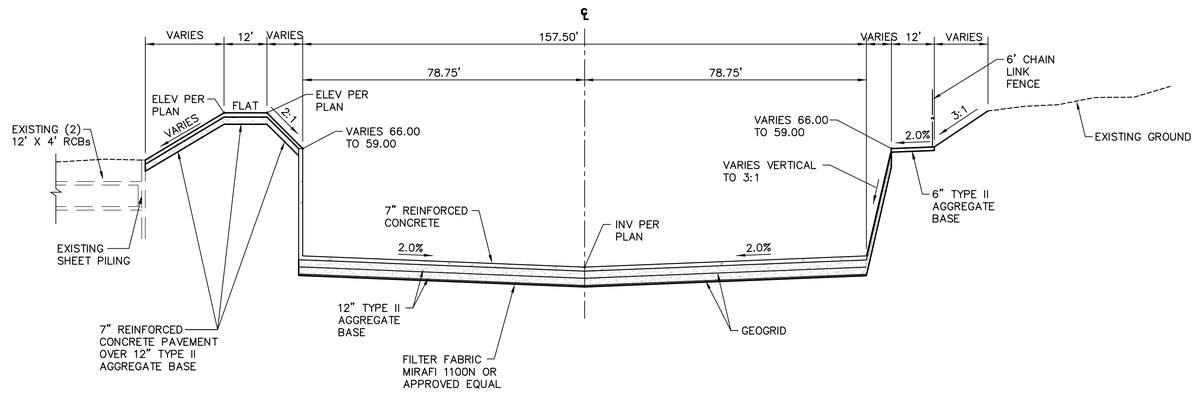

CHANNEL SECTION (H / D04)
SCALE: N.T.S.

REV.	DATE	BY	DESCRIPTION

DESIGNED H. DESAI	JOB No. 511516
DRAWN M. D'ALESSANDRO	DRAWING No. 1516-000-D04
CHECKED M. BAIRD	SCALE HORIZ: N/A VERT: N/A
DATE APRIL 2006	

PRELIMINARY 30% APRIL 2006 NOT FOR CONSTRUCTION

Clark County Water Reclamation DISTRICT
"The Clean Water Team"

PBSJ
2270 Corporate Circle Drive
Suite 100
Henderson, Nevada 89074
Telephone: 702/263-7275
Fax: 702/263-7200
ENGINEERING · PLANNING · SURVEYING · CONSTRUCTION SERVICES

CLARK COUNTY WATER RECLAMATION DISTRICT
LAS VEGAS WASH CHANNELIZATION IMPROVEMENTS
TYPICAL SECTIONS – 4

BID NO. XXXXXX
DRAWING NO. D04
SHEET NO. 26 OF 31

P:\Projects\511516\404 Permit\1516-000-001-009 4-12-06 12:48pm 18824 XREFS: 1516-BDR

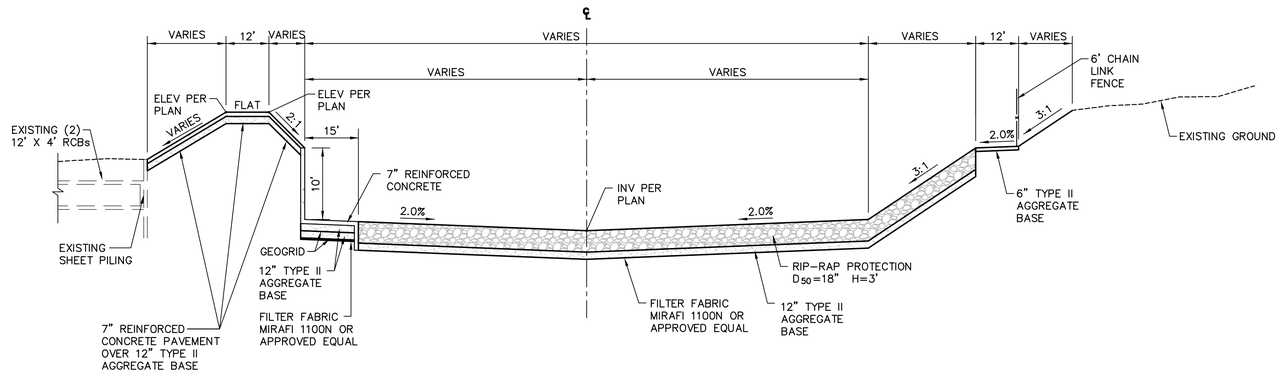

CHANNEL SECTION (I / D05)
SCALE: N.T.S.

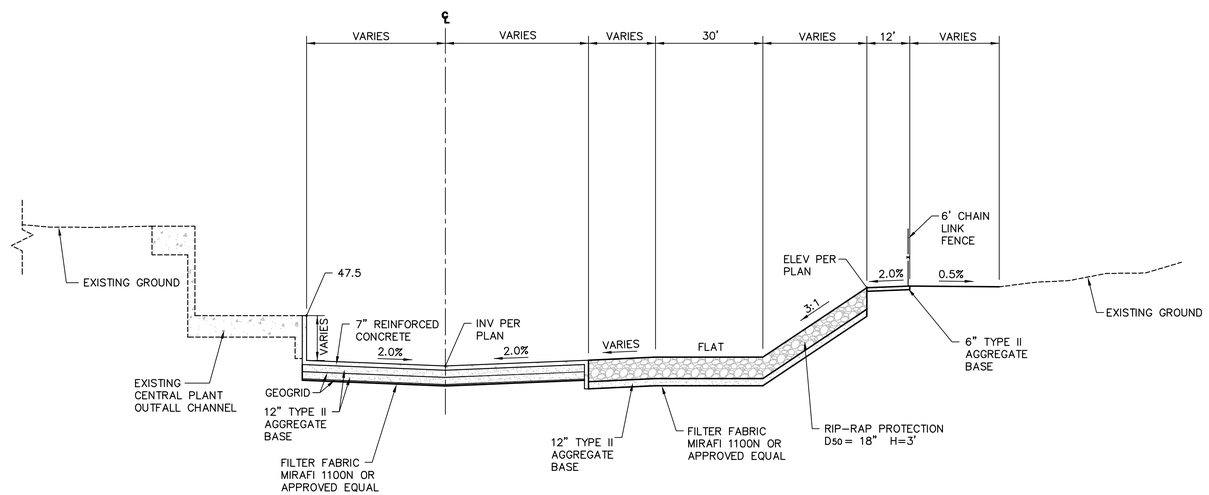

CHANNEL SECTION (J / D05)
SCALE: N.T.S.

REV.	DATE	BY	DESCRIPTION

DESIGNED H. DESAI	JOB No. 511516
DRAWN M. D'ALESSANDRO	DRAWING No. 1516-000-D05
CHECKED M. BAIRD	SCALE HORIZ: N/A VERT: N/A
DATE APRIL 2006	

PRELIMINARY 30% APRIL 2006 NOT FOR CONSTRUCTION

Clark County Water Reclamation DISTRICT
The "Clean Water Team"

PBSJ
2270 Corporate Circle Drive
Suite 100
Henderson, Nevada 89074
Telephone: 702/263-7275
Fax: 702/263-7200
ENGINEERING · PLANNING · SURVEYING · CONSTRUCTION SERVICES

CLARK COUNTY WATER RECLAMATION DISTRICT
LAS VEGAS WASH CHANNELIZATION IMPROVEMENTS
TYPICAL SECTIONS – 5

BID NO. XXXXXX
DRAWING NO. D05
SHEET NO. 27 OF 31

P:\Projects\511516\404 Permit\1516-000-D01-D09 4-12-06 12:49pm 18824 XREFS: 1516-BDR

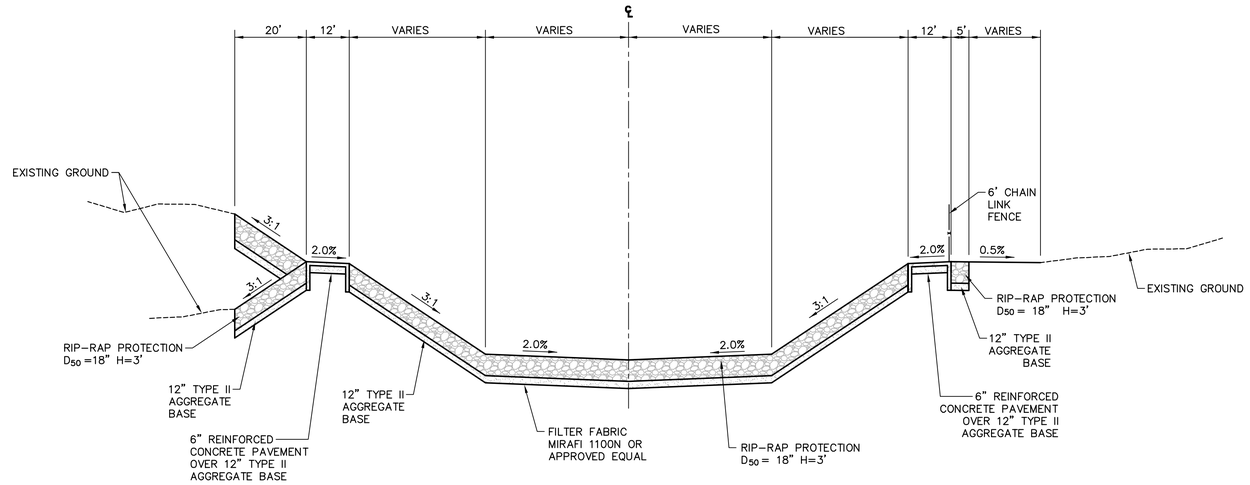

CHANNEL SECTION (K / D06)
SCALE: N.T.S.

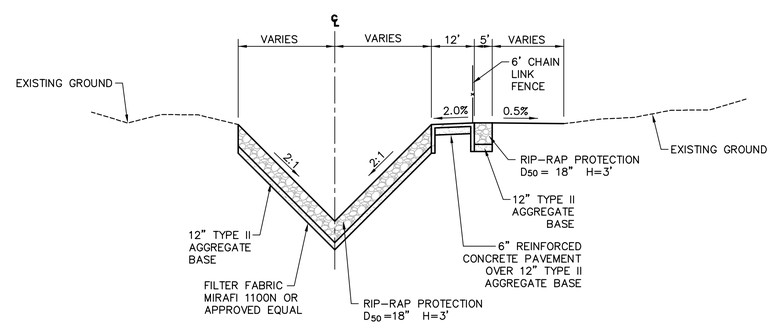

CHANNEL SECTION (L / D06)
SCALE: N.T.S.

REV.	DATE	BY	DESCRIPTION

DESIGNED H. DESAI	JOB No. 511516
DRAWN M. D'ALESSANDRO	DRAWING No. 1516-000-D06
CHECKED M. BAIRD	SCALE HORIZ: N/A VERT: N/A
DATE APRIL 2006	

PRELIMINARY 30% APRIL 2006 NOT FOR CONSTRUCTION

Clark County Water Reclamation DISTRICT
The "Clean Water Team"

PBSJ
2270 Corporate Circle Drive
Suite 100
Henderson, Nevada 89074
Telephone: 702/263-7275
Fax: 702/263-7200
ENGINEERING · PLANNING · SURVEYING · CONSTRUCTION SERVICES

CLARK COUNTY WATER RECLAMATION DISTRICT

LAS VEGAS WASH CHANNELIZATION IMPROVEMENTS

TYPICAL SECTIONS – 6

BID NO. XXXXXX
DRAWING NO. D06
SHEET NO. 28 OF 31

P:\Projects\511516\404 Permit\1516-000-001-009 4-12-06 12:50pm 18824 XREFS: 1516-BDR