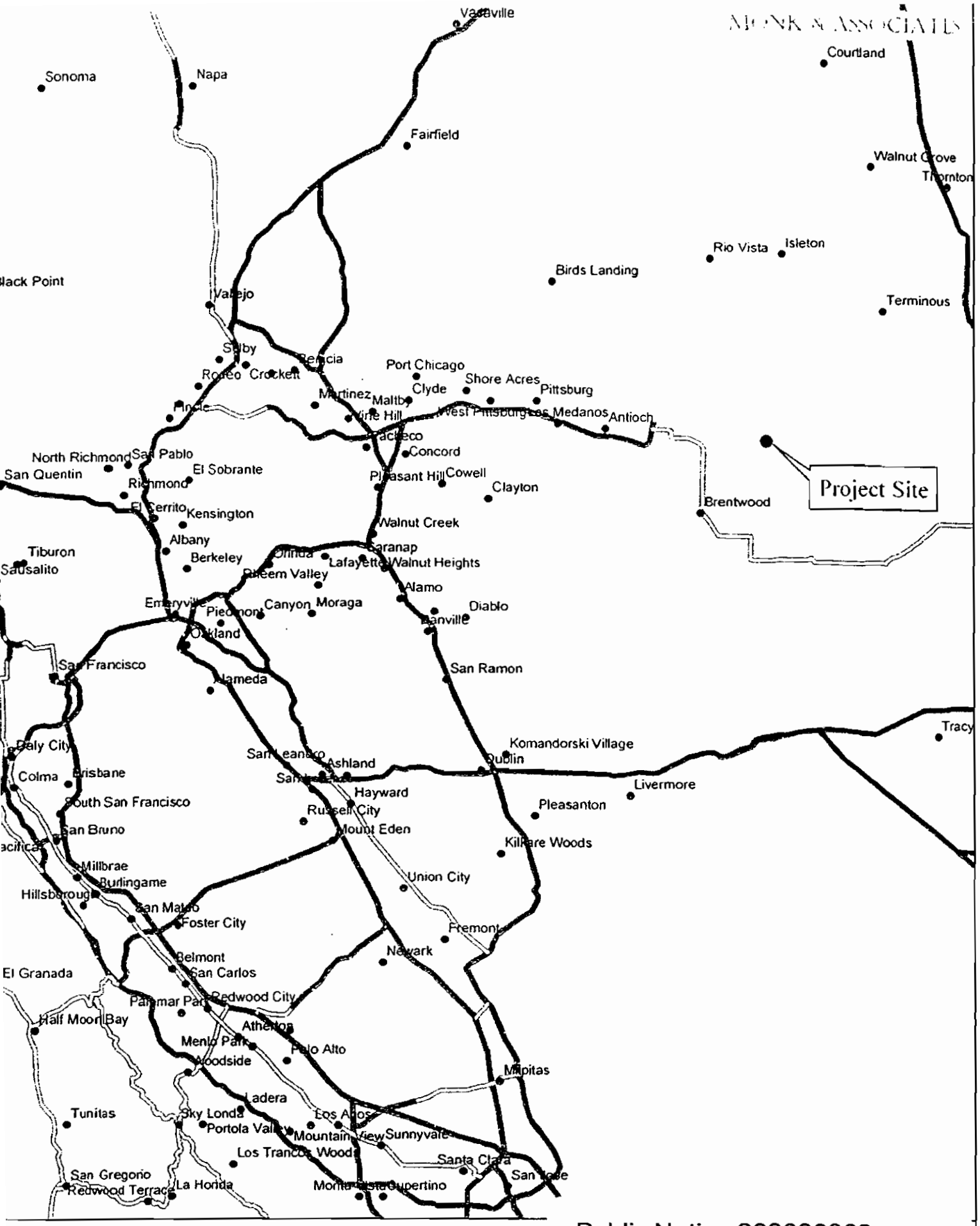

Public Notice 200600962

figure 1

nk & Associates
ironmental Consultants
Saranap Avenue, Suite Q
nut Creek, California 94595
) 947-4867

Figure A. Summer Lakes Project Site Regional Map
Brentwood, California

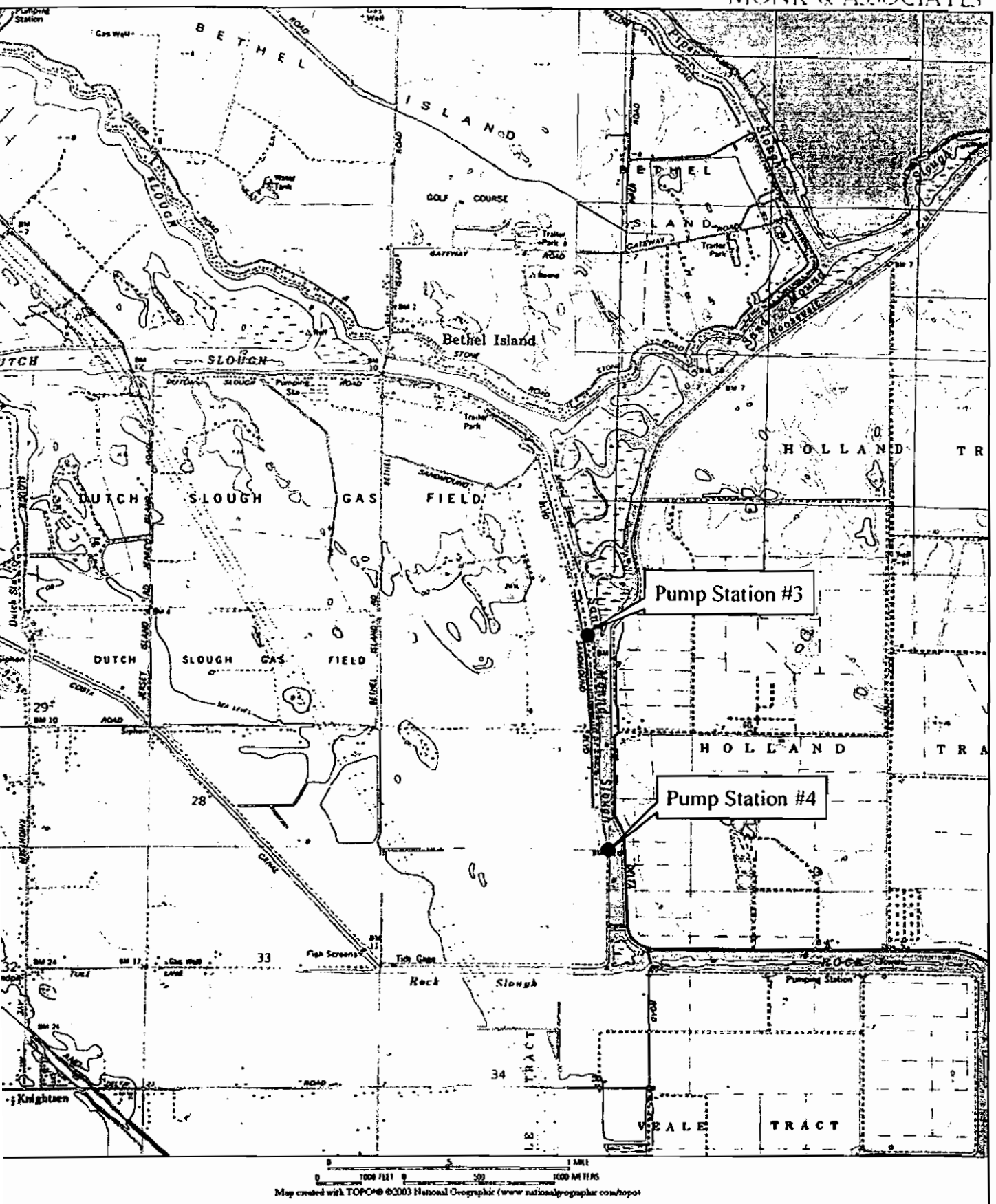

Figure B. Summer Lakes Pump Stations Locational Map
Brentwood, California

7.5-Minute Jersey Island & Brentwood quadrangles

Associates
ıental Consultants
ınap Avenue, Suite Q
'reek, California 94595
'-4867

Public Notice 200600962 figure 2

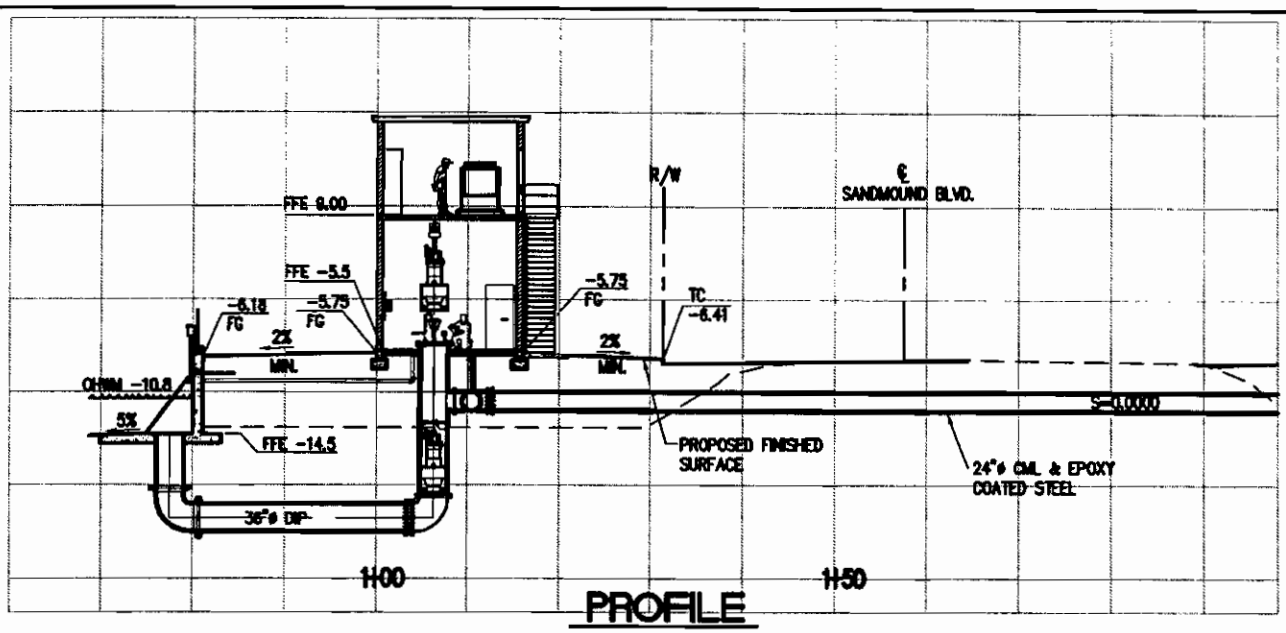

PROFILE

SCALE: 1"=20'

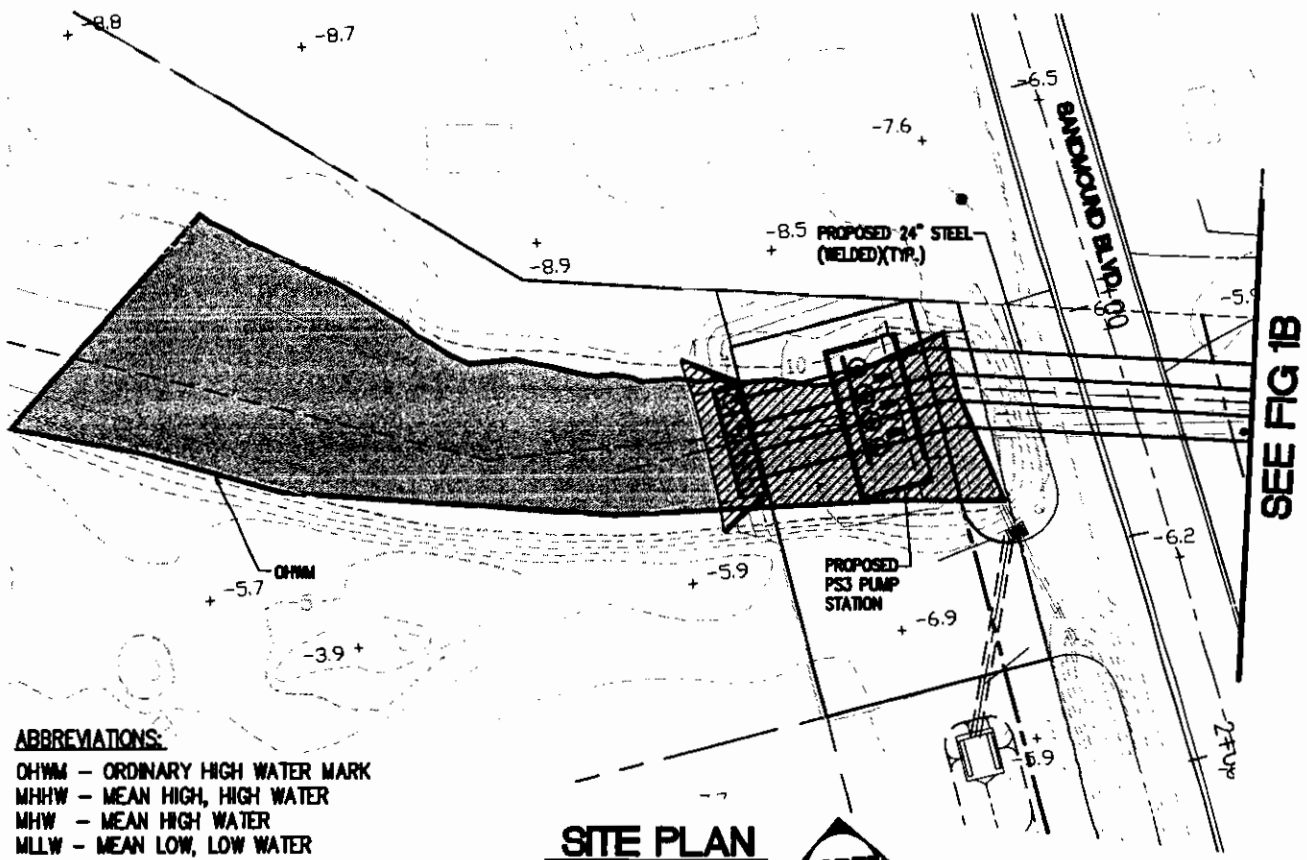

ABBREVIATIONS:

OHWM – ORDINARY HIGH WATER MARK
MHHW – MEAN HIGH, HIGH WATER
MHW – MEAN HIGH WATER
MLLW – MEAN LOW, LOW WATER

SITE PLAN

SCALE: 1"=40'

NORTH

IMPACTS TO WATERS OF THE U.S.

INBOARD IMPACT (TOT.): 3,317 sq. ft. (0.076 AC)

OUTBOARD IMPACT (TOT.): 740 sq. ft. (0.017 AC)

WATERS OF THE U.S.

IMPACTED

PACE
PACIFIC ADVANCED CIVIL ENGINEERING
17520 NEWHOPE STREET, SUITE 200
FOUNTAIN VALLEY, CA 92708
PH (714) 481-7300 FAX (714) 481-7299

RECONSTRUCTION OF PUMP STATION 3 OUTFALL IN EAST CONTRA COSTA COUNTY

PROPOSED RD #799 PUMP STATION RECONTRUCTION

FIGURE

Public Notice 200600962 figure 3

Xrefs: 8527-PS-SITE.dwg; 8527-Base-sandmound.dwg; 8527-Base.dwg; 8527-TOPO.dwg; Pipe Support.dwg; 8527-TOPO.dwg
P:\8527E\Engineering\8527-30\exhibits\8527-PS3-fig1.dwg - Tab: 1A By: llopez on Jul. 18, 2006 at 11:08 am

W:\8527E\Engineering\8527-30\exhibits\8527-PS3-fig1(REV8-31-06).dwg - Tab: Layout1 By: rmurphy on Aug. 31, 2006 at 04:54
Xrefs: 8527-PS-SITE REV.8-31-06.dwg; 8527-Base-sandmound.dwg; 8527-TOPO.dwg; 8527-PS3-fig1.dwg
Dimscale = 40; LTscale = 1; PSltscale = 1; Acad Ver. = 16.2s (LMS Tech); Visretain = 1

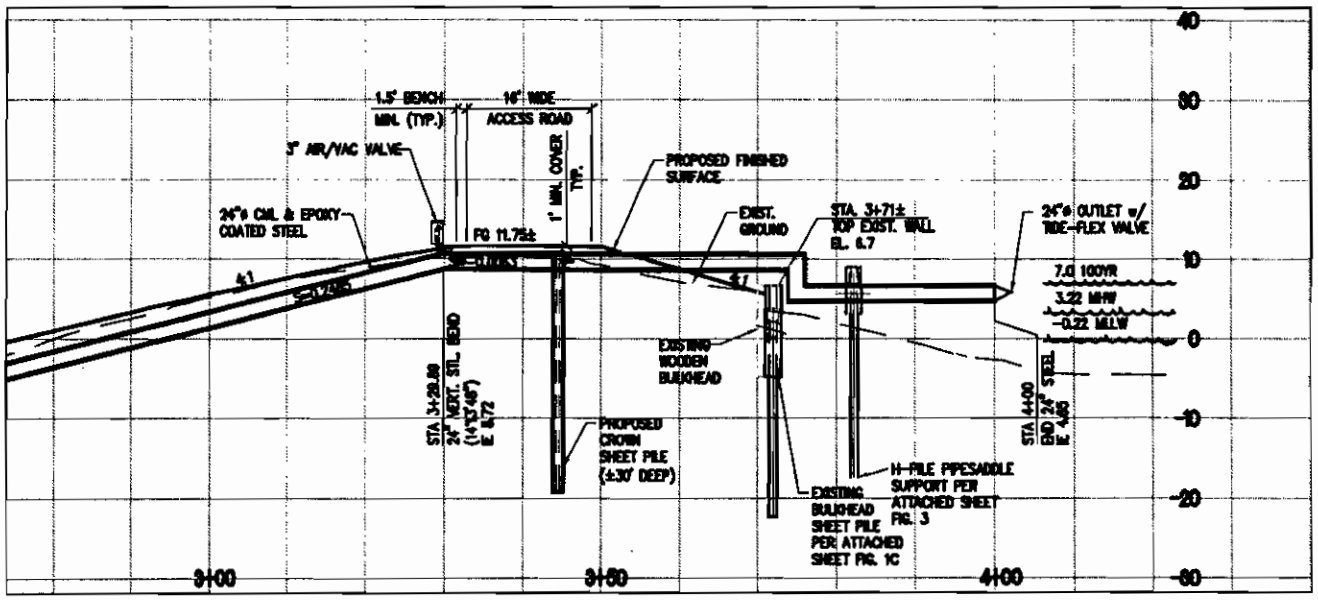

PROFILE

SCALE: 1"=20'

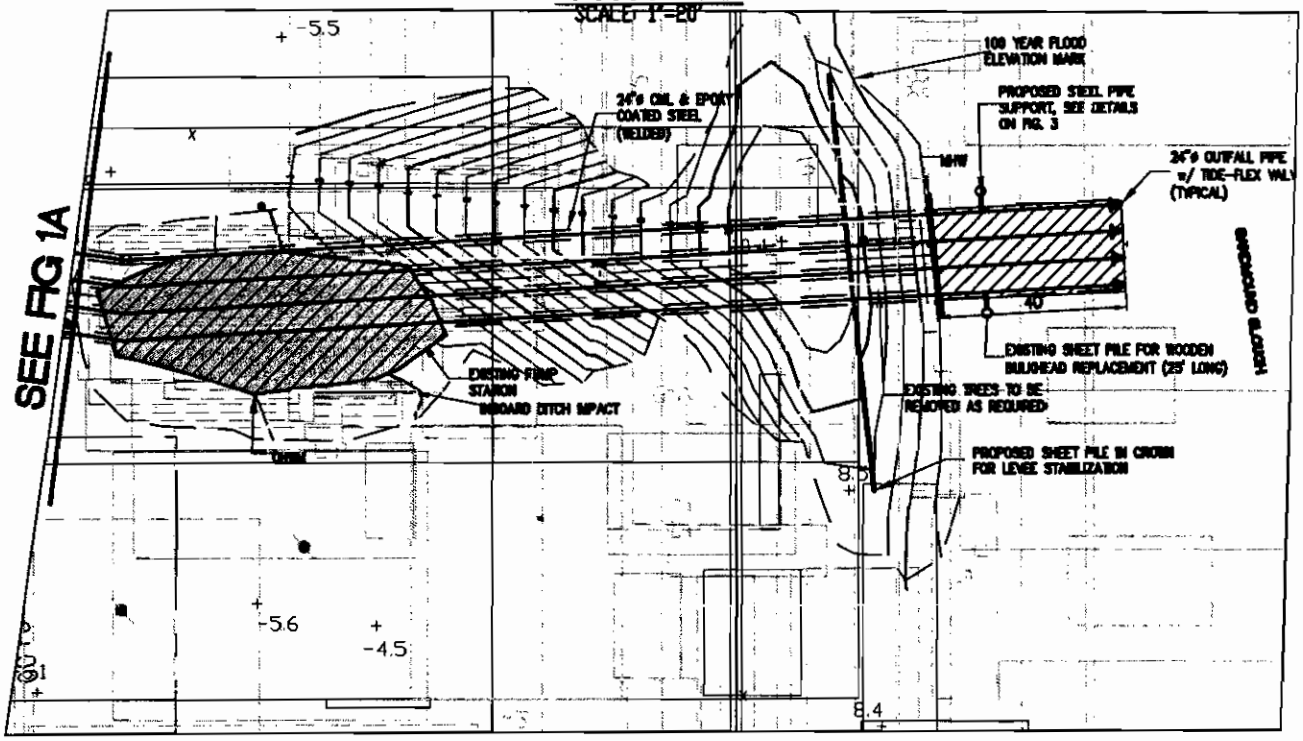

ABBREVIATIONS:

100YR – 100 YEAR FLOOD ELEVATION MARK
OHWM – ORDINARY HIGH WATER MARK
MHHW – MEAN HIGH, HIGH WATER
MHW – MEAN HIGH WATER
MLLW – MEAN LOW, LOW WATER

SITE PLAN

SCALE: 1"=40'

NORTH

WATERS OF THE U.S.

INBOARD IMPACTED WATERS OF THE U.S.

OUTBOARD IMPACTED WATERS OF THE U.S.

IMPACTS TO WATERS OF THE U.S.

INBOARD IMPACT (TOT.): 3,317 sq. ft. (0.076 AC)

OUTBOARD IMPACT (TOT.): 740 sq. ft. (0.017 AC)

PACE
PACIFIC ADVANCED CIVIL ENGINEERING
17328 NEWHOPE STREET, SUITE 200
FOUNTAIN VALLEY, CA 92708
PH (714) 481-7300 FAX (714) 481-7299

RECONSTRUCTION OF PUMP STATION 3 & ITS OUTFALL IN EAST CONTRA COSTA COUNTY

PROPOSED RD #799 PUMP STATION RECONTRUCTION PROJECT IN SANDMOUND

FIGURE

Public Notice 200600962 figure 4

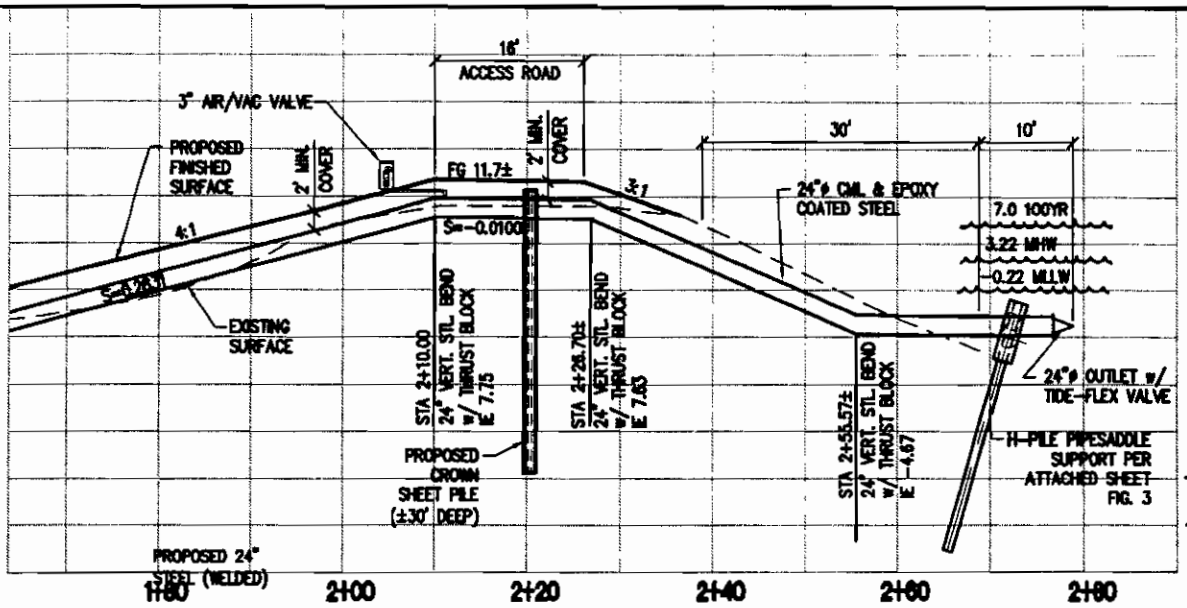

PROFILE

SCALE: 1"=20'

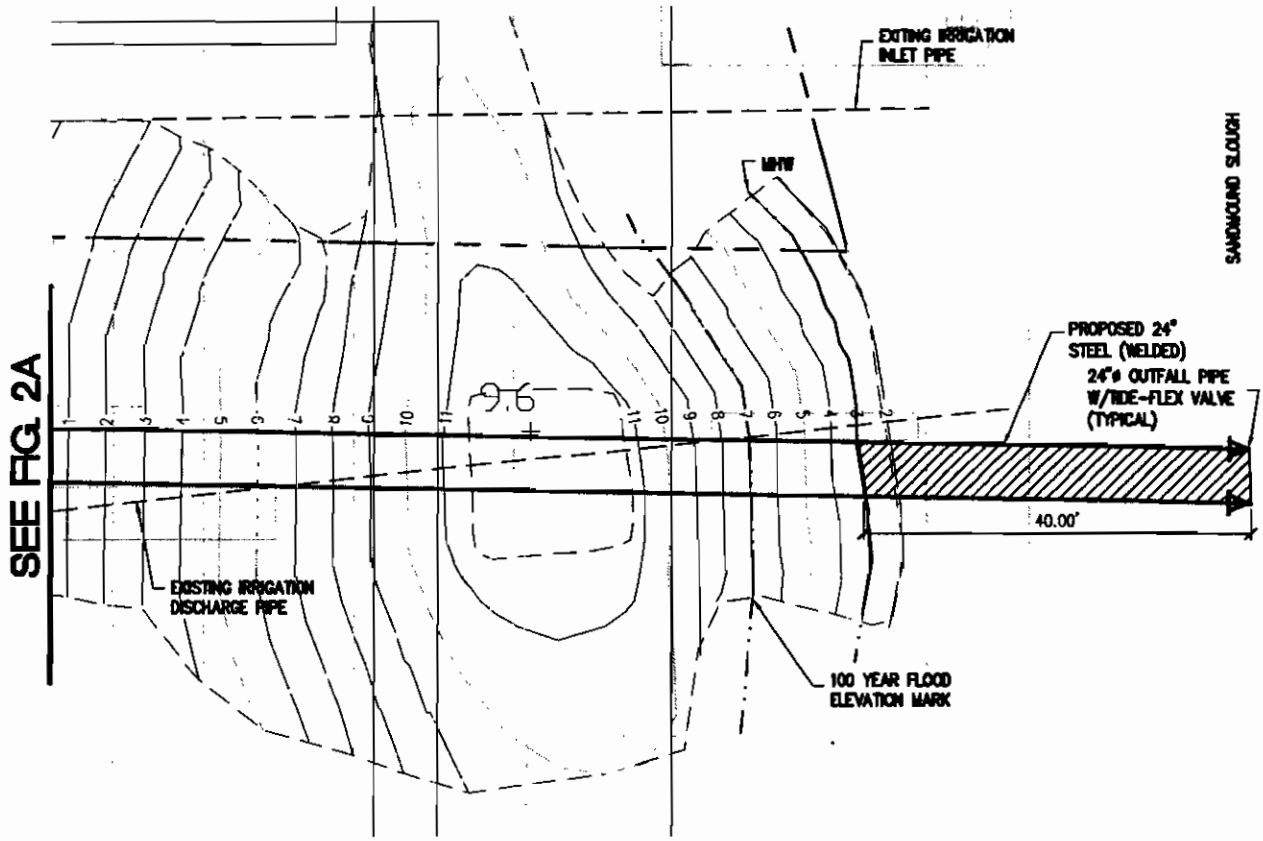

SITE PLAN

SCALE: 1"=20'

NORTH

OUTBOARD IMPACTED WATERS OF THE U.S.

IMPACTS TO WATERS OF THE U.S.

INBOARD IMPACT (TOT.): 2,388 sq. ft. (0.055 AC)

OUTBOARD IMPACT (TOT.): 320 sq. ft. (0.0073 AC)

PACE
PACIFIC ADVANCED CIVIL ENGINEERING
17520 NEWHOPE STREET, SUITE 200
FOUNTAIN VALLEY, CA 92708
PH (714) 481-7300 FAX (714) 481-7299

RECONSTRUCTION OF PUMP STATION 4 & ITS OUTFALL IN EAST CONTRA COSTA COUNTY

PROPOSED RD #799 PUMP STATION RECONSTRUCTION

FIGURE

Public Notice 200600962 figure 5

Xrefs: 8527-PS-SITE.DWG; 8527-BASE-SANDMOUND.DWG; 8527-BASE.DWG; 8527-TOPO.DWG
W:\8527L\Engineering\8527-30\exhibits\8527-PS4-fig2.dwg - Tab: SHT2 By: rmurphy on Aug. 16, 2006 at 05:07 pm

Xrefs: 8527-PS-SITE.dwg; 8527-Base-sandmound.dwg; 8527-Base.dwg; 8527-TOPO.dwg; Pipe Support.dwg; 8527-TOPO.dwg
P:\8527E\Engineering\8527-30\exhibits\8527-PS3-fig1.dwg - Tab: FIG. 3 By: rmurphy on Jul. 25, 2006 at 02:56 pm

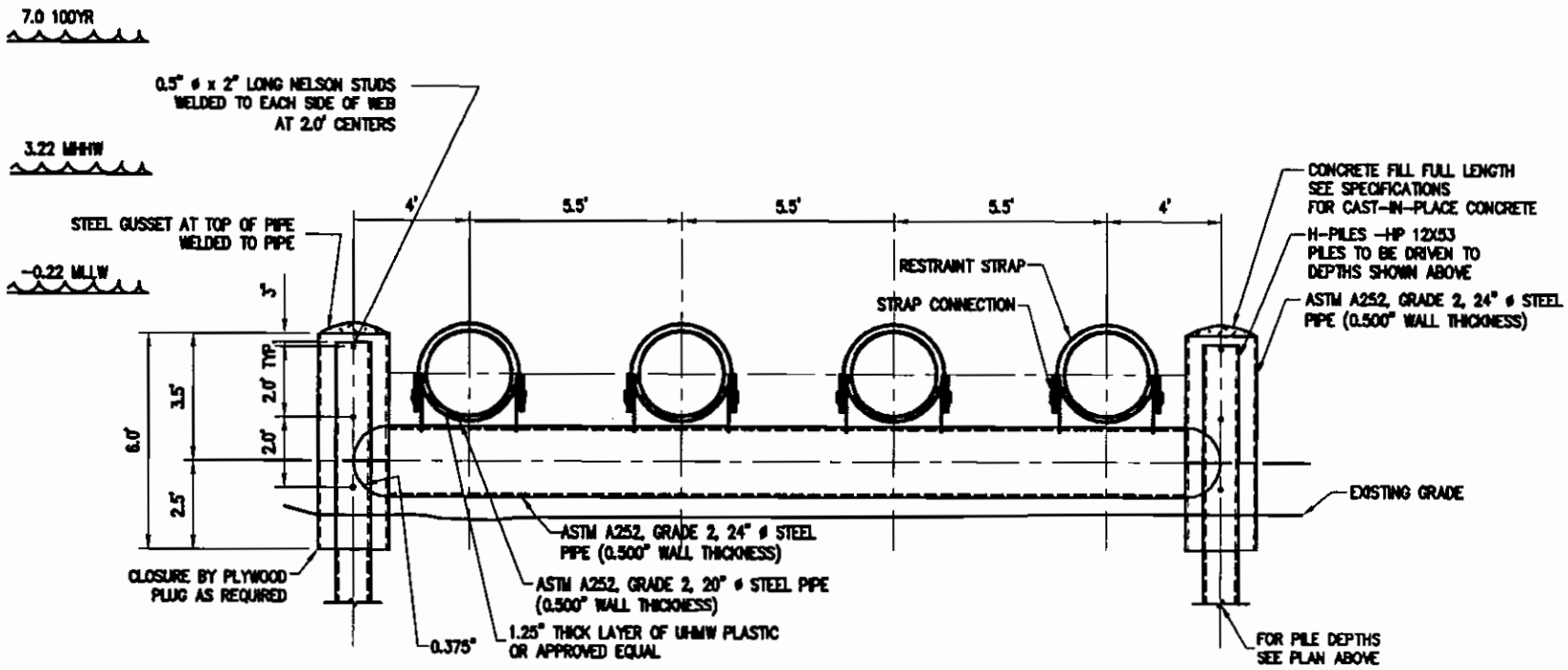

PACE
PACIFIC ADVANCED CIVIL ENGINEERING
17520 NEWHOPE STREET, SUITE 200
FOUNTAIN VALLEY, CA 92708
PH (714) 481-7300 FAX (714) 481-7299

RECONSTRUCTION OF PUMP STATION 3 & ITS OUTFALL IN EAST COSTA
COSTA COUNTY

PROPOSED RD #799 PUMP STATION RECONSTRUCTION

FIGURE

Public Notice 200600962 figure 6

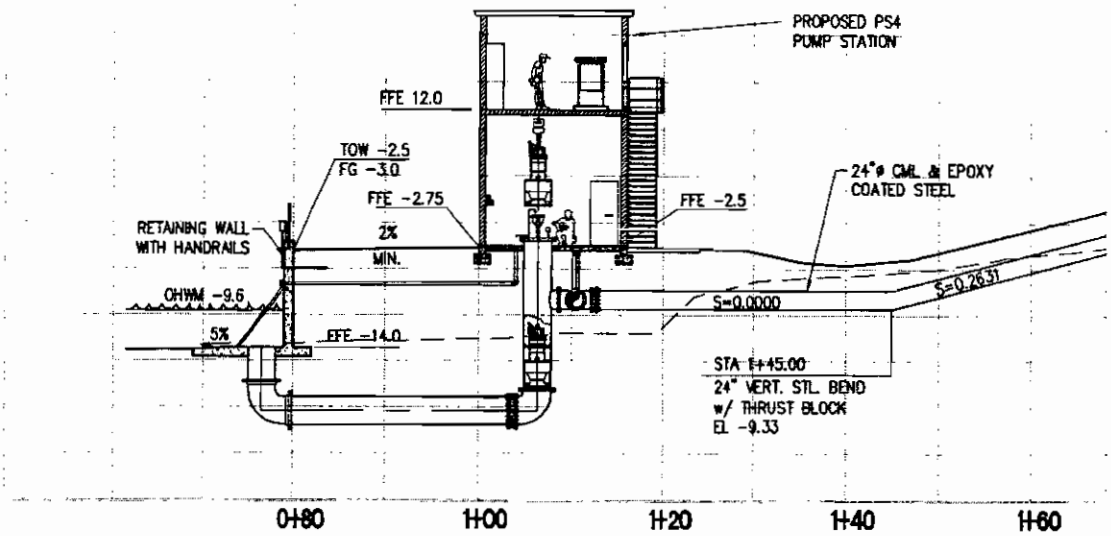

SECTION

SCALE: 1"=20'

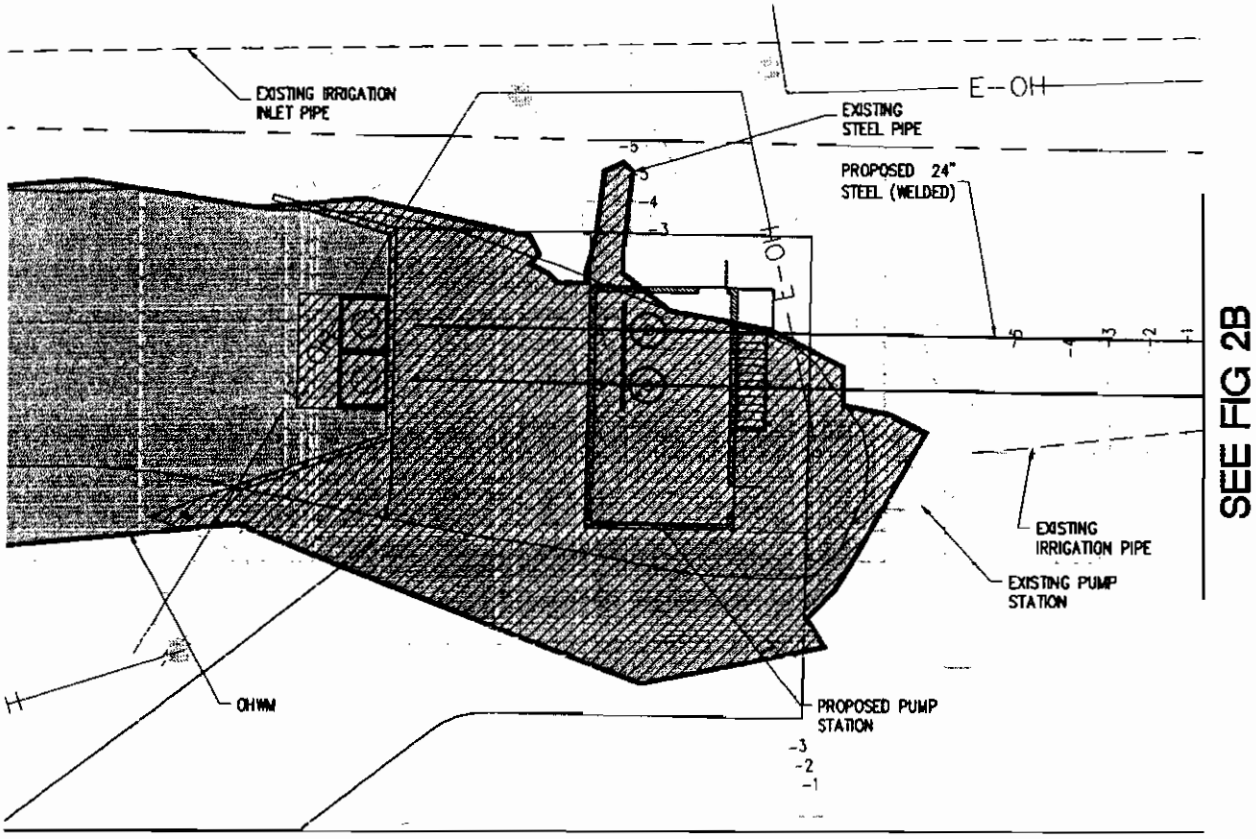

IMPACTS TO WATERS OF THE U.S.

INBOARD IMPACT (TOT.): 2,388 sq. ft. (0.055 AC)

OUTBOARD IMPACT (TOT.): 320 sq. ft. (0.0073 AC)

SITE PLAN

SCALE: 1"=20'

NORTH

WATERS OF THE U.S.

INBOARD IMPACTED WATERS OF THE U.S.

PACE
PACIFIC ADVANCED CIVIL ENGINEERING
17520 NEWHOPE STREET, SUITE 200
FOUNTAIN VALLEY, CA 92708
PH (714) 481-7300 FAX (714) 481-7299

RECONSTRUCTION OF PUMP STATION 4 & ITS OUTFALL IN EAST CONTRA COSTA COUNTY

PROPOSED RD #799 PUMP STATION RECONTRUCTION PROJECT IN SANOMOUND

FIGURE

Public Notice 200600962 figure 7

Xrefs: 8527-PS-SITE.dwg; 8527-Base-sandmound.dwg; 8527-Base.dwg; 8527-TOPO.dwg
P:\8527E\Engineering\8527-30\exhibits\8527-PS4-fig2.dwg - Tab: SHT1 By: rmurphy on Jul. 25, 2006 at 10:02 am