FIGURE 2-1
PROPOSED WASTEWATER TREATMENT FACILITY
SOUTH VALLEY SEWER DISTRICT

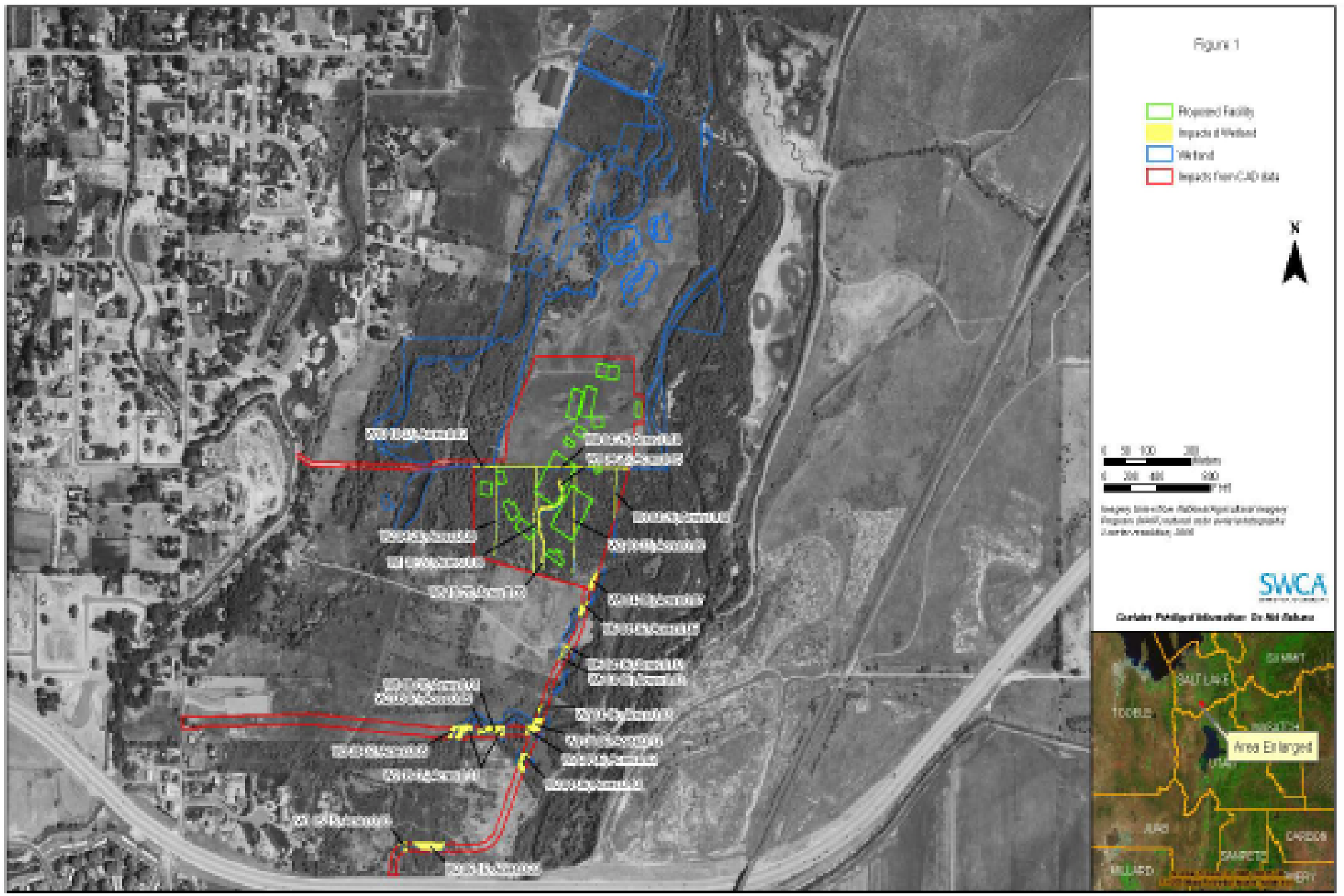
Figure 1
Proposed Facility
Impacted Wetland
Wetland
Impacts From CAD Data
N
SWCA
Area Enlarged

BOWEN COLLINS & Associates, Inc. Consulting Engineers

PRELIMINARY PLAN
NOT FINAL - SUBJECT TO CHANGE

NO.	DATE	REV. BY	DESCRIPTION

REVISIONS

WASTE WATER TREATMENT PLANT - RIVERTON FACILITY
SOUTH VALLEY SEWER DISTRICT
DRAPER, UT

VERIFY SCALE
BAR IS ONE INCH ON ORIGINAL DRAWING

REVIEW
CHECKED
APPROVED

DESIGN
DESIGN B.WYATT
DRAWN L.DELANO

PLANT OUTFALL AND BANK STABILIZATION

DATE: MARCH 2008
PROJECT NUMBER 060-07-13

DRAWING NO.

SHEET 1 OF 2

FILE LOCATION: P:\South Valley Sewer District\WWTP\Final Design 2008\Drawings\Outlet-bdw.dwg PLOTTED: Thursday, March 27, 2008 2:51:29 PM BY: BRANDON WYATT

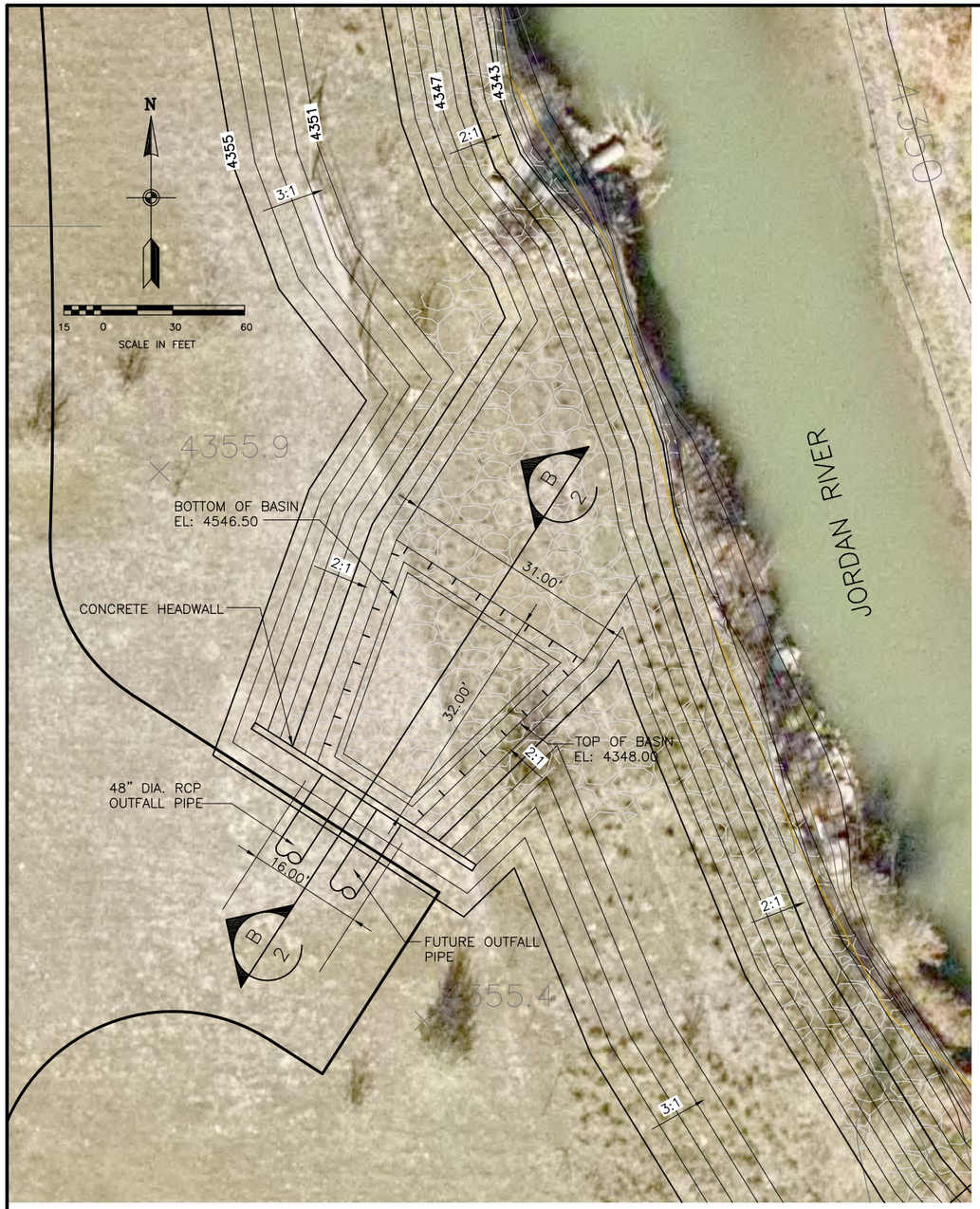

OUTFALL STILLING BASIN DETAIL (A)

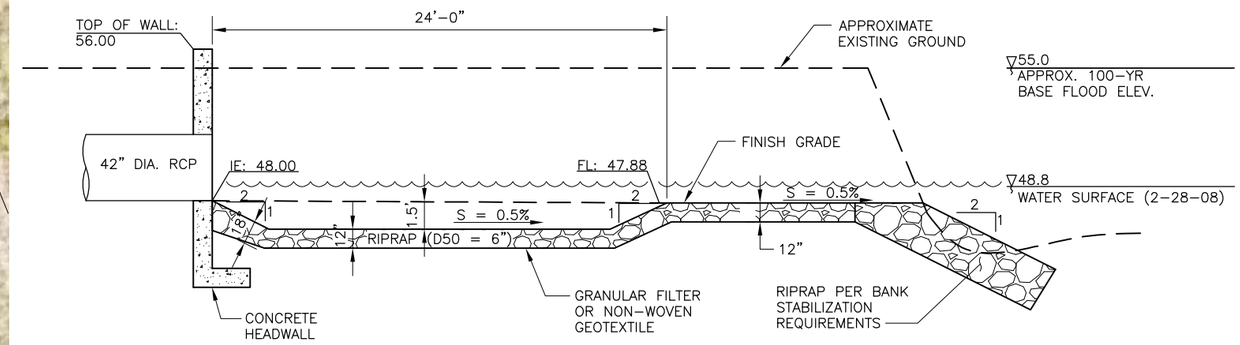

RIPRAP STILLING BASIN (B)

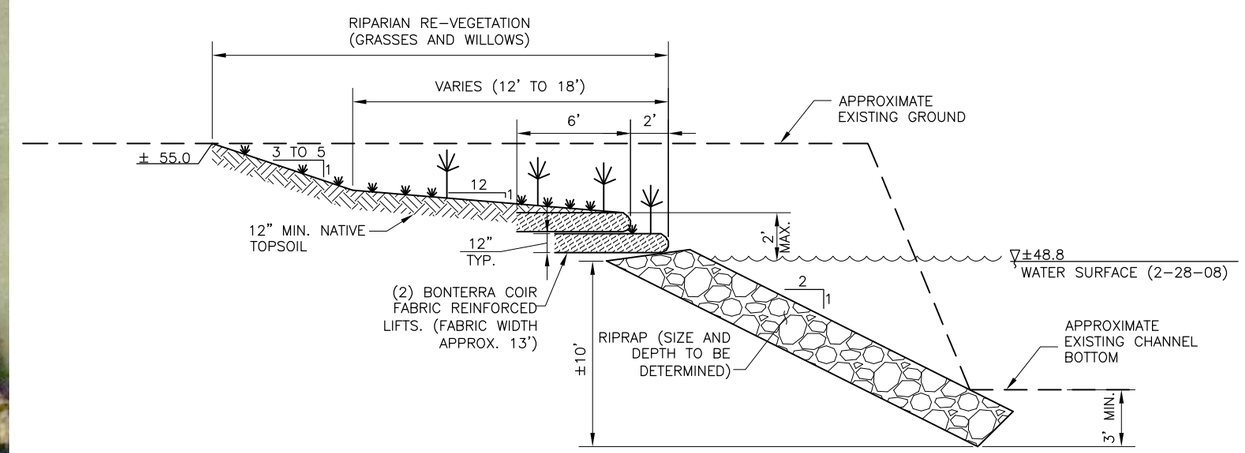

BANK STABILIZATION DETAIL (C)

BOWEN COLLINS & Associates, Inc. Consulting Engineers

PRELIMINARY PLAN
NOT FINAL - SUBJECT TO CHANGE

NO.	DATE	REV. BY	DESCRIPTION

REVISIONS

WASTE WATER TREATMENT PLANT - RIVERTON FACILITY
SOUTH VALLEY SEWER DISTRICT
DRAPER, UT

VERIFY SCALE
BAR IS ONE INCH ON ORIGINAL DRAWING

REVIEW
CHECKED
APPROVED

DESIGN B.WYATT
DRAWN L.DELANO

PLANT OUTFALL AND BANK STABILIZATION

DATE: MARCH 2008
PROJECT NUMBER 060-07-13

DRAWING NO.

SHEET 2 OF 2

FILE LOCATION: P:\South Valley Sewer District\WWTP\Final Design 2008\Drawings\Details.dwg PLOTTED: Thursday, March 27, 2008 2:54:59 PM BY: BRANDON WYATT

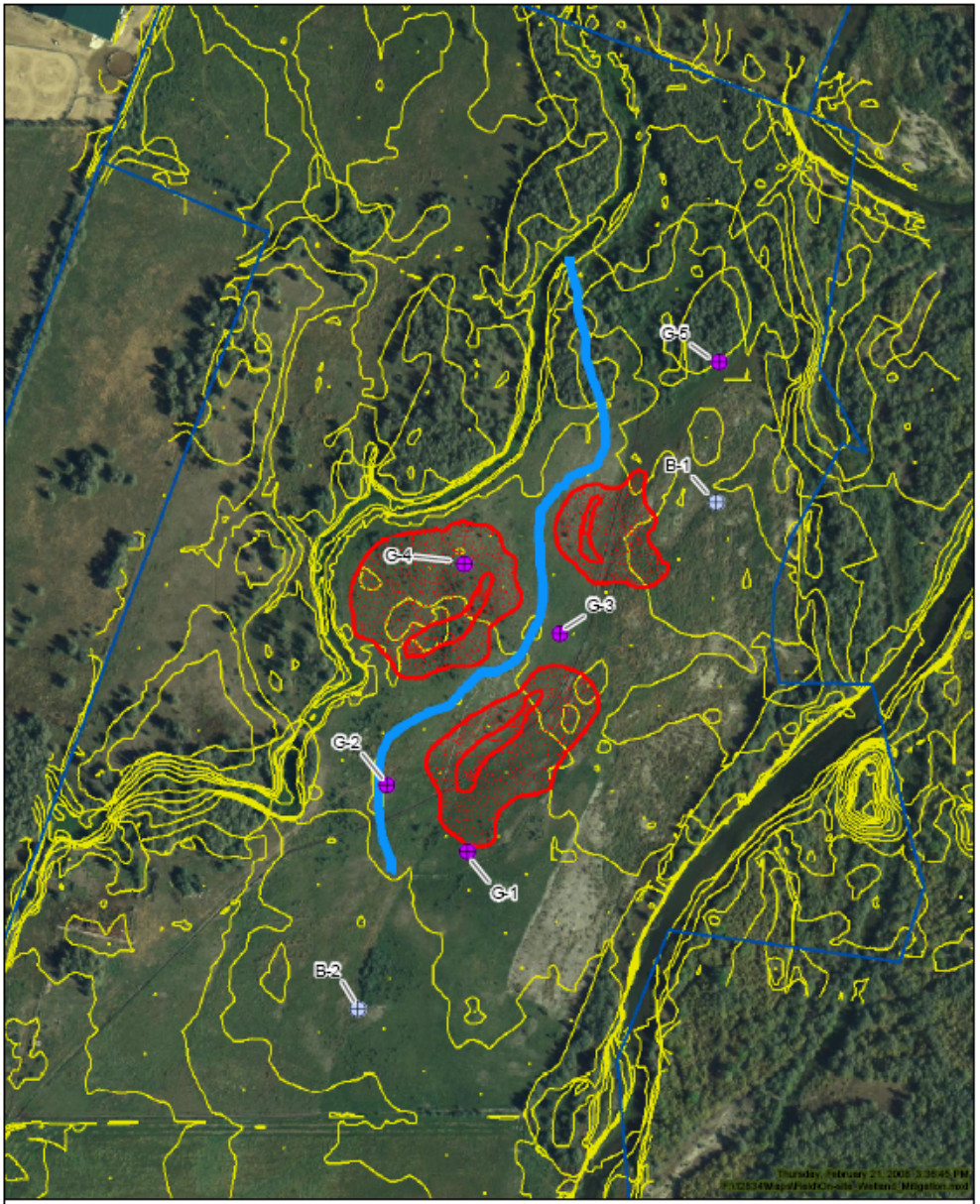

On-site Wetland Mitigation

N

SWCA

Ground Water Wells 2004

Ground Water Wells 2008

Contours

New stream location

Wet Meadow

Emergent Marsh

100 50 0 100 Feet