USACE PN 200500557

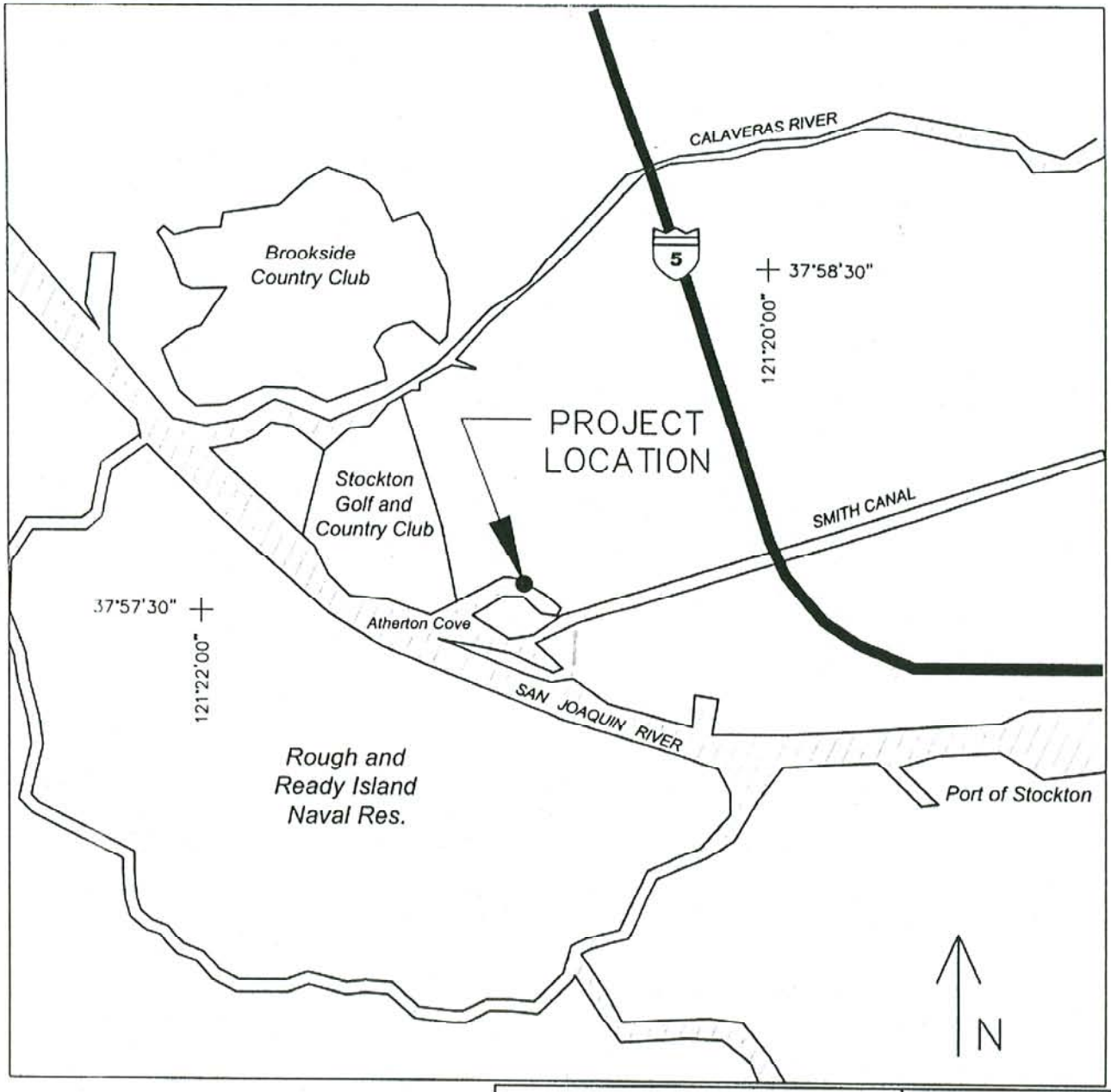

(miles)
-0.25 0 0.25 0.5 0.75 1.0
SCALE 1" = 0.5 mile

FIGURE 1
LOCATION MAP
JUNE 2005

SHIPMAN BOAT DOCK AND PATIO

APPLICATION BY: GERALD E. & PATTY SHIPMAN
3444 COUNTRY CLUB BLVD.
STOCKTON, CA 95204
SAN JOAQUIN RIVER, SAN JOAQUIN CNTY

P:\5629 SHIPMAN BOAT DOCK\DWG\PLAN

FLOATING DOCK ROOF
1" = 20'

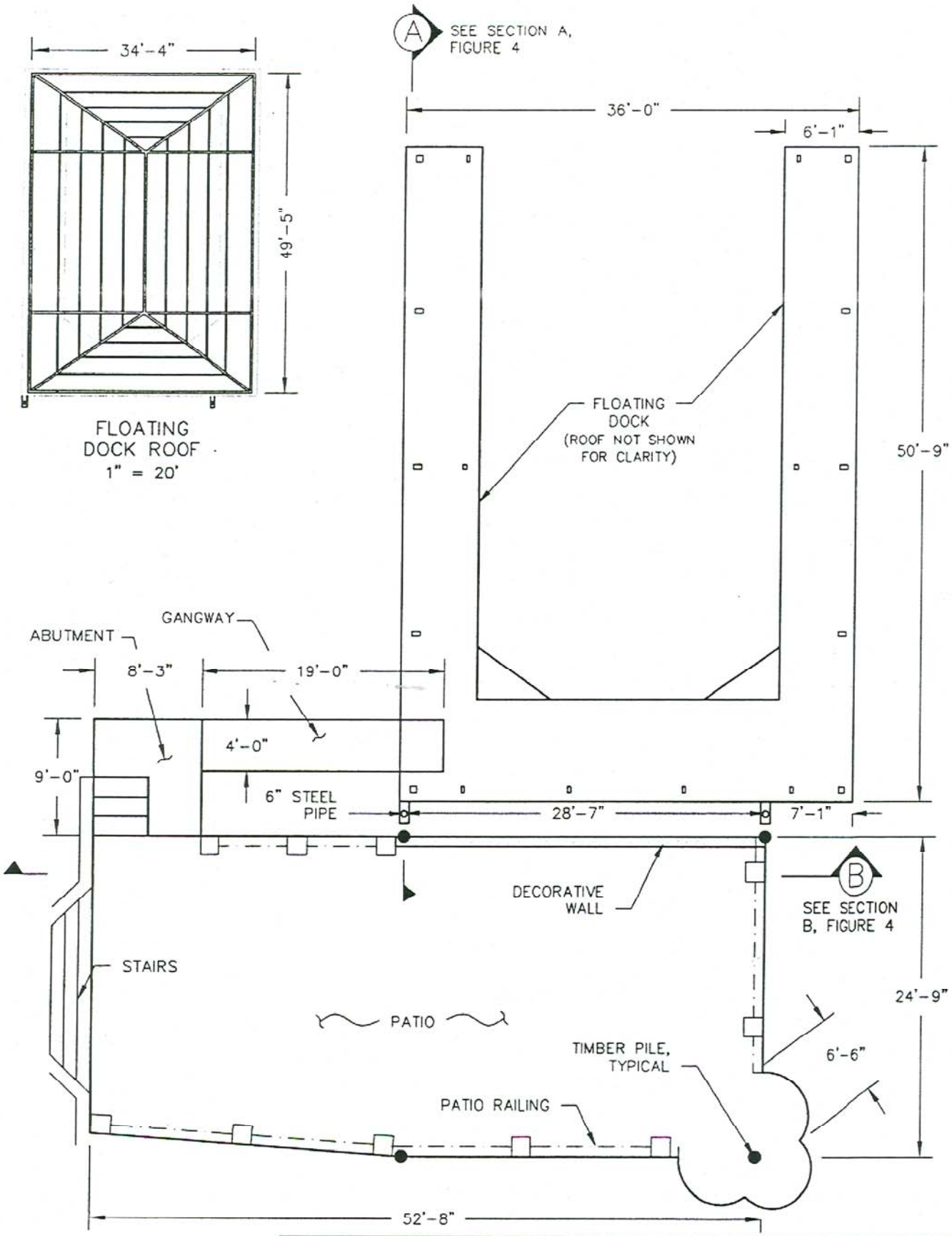

-5' 0 5' 10' 15'
SCALE 1" = 10'

FIGURE 3
PLAN VIEW
JUNE 2005

SHIPMAN BOAT DOCK AND PATIO

APPLICATION BY: GERALD E. & PATTY SHIPMAN
3444 COUNTRY CLUB BLVD.
STOCKTON, CA 95204
SAN JOAQUIN RIVER, SAN JOAQUIN CNTY

P:\5829 SHIPMAN BOAT DOCK\DWG\PLAN

USACE PN 200500557

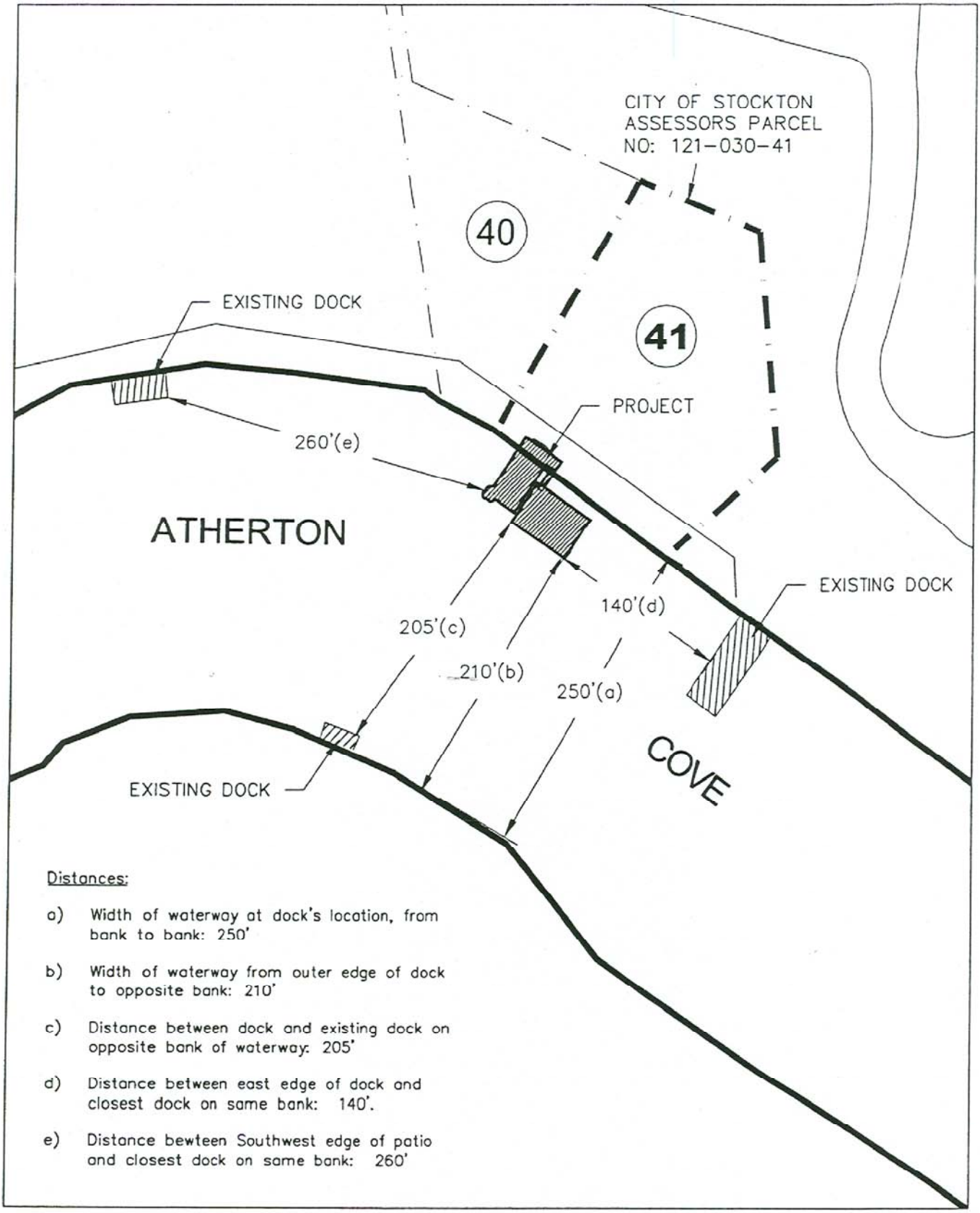

Distances:

a) Width of waterway at dock's location, from bank to bank: 250'

b) Width of waterway from outer edge of dock to opposite bank: 210'

c) Distance between dock and existing dock on opposite bank of waterway: 205'

d) Distance between east edge of dock and closest dock on same bank: 140'.

e) Distance bewteen Southwest edge of patio and closest dock on same bank: 260'

-50' 0 50' 100' 150'

SCALE 1" = 100'

FIGURE 2
VICINTIY MAP

JUNE 2005

SHIPMAN BOAT DOCK AND PATIO

APPLICATION BY: GERALD E. & PATTY SHIPMAN
3444 COUNTRY CLUB BLVD.
STOCKTON, CA 95204
SAN JOAQUIN RIVER, SAN JOAQUIN CNTY

P:\5629 SHIPMAN BOAT DOCK\DWG\PLAN

USACE PN 200500557

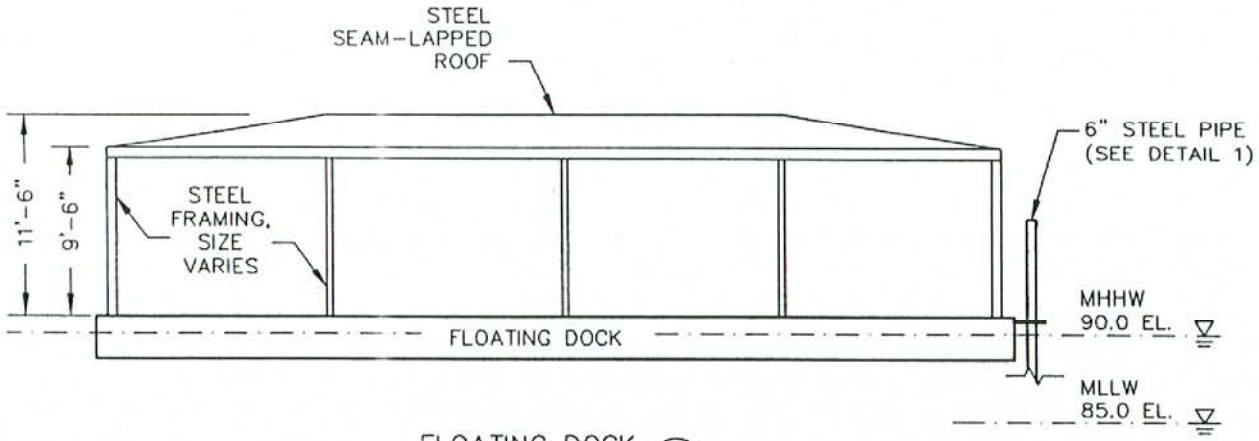

FLOATING DOCK (A)
SCALE 1"=10'

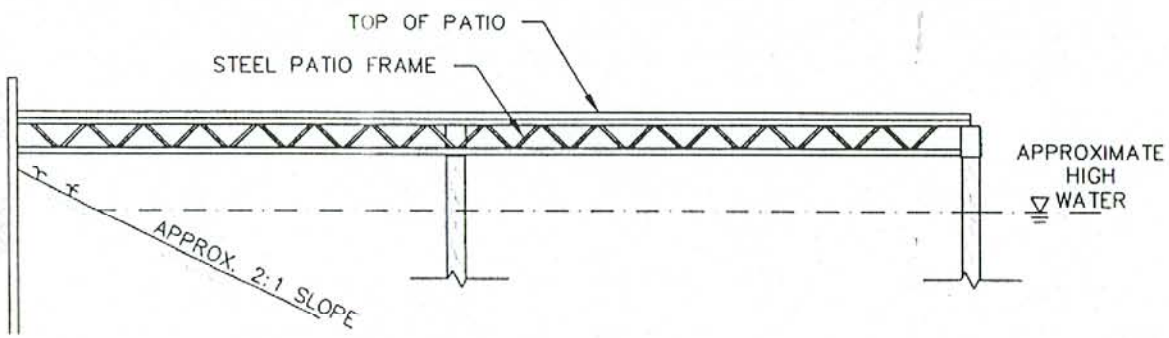

PATIO (B)
SCALE 1"=10'

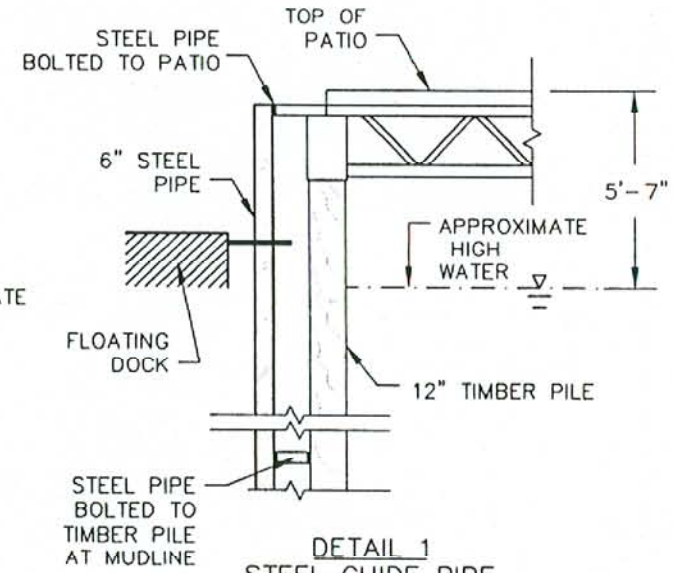

DETAIL 1
STEEL GUIDE PIPE
CONNECTION
SCALE 1"=5'

-5' 0 5' 10' 15'
SCALE 1" = 10'

-2.5' 0 2.5' 5' 7.5'
SCALE 1" = 5'

FIGURE 4
SECTIONS
JUNE 2005

SHIPMAN BOAT DOCK AND PATIO

APPLICATION BY: GERALD E. & PATTY SHIPMAN
3444 COUNTRY CLUB BLVD.
STOCKTON, CA 95204
SAN JOAQUIN RIVER, SAN JOAQUIN CNTY

P:\5629 SHIPMAN BOAT DOCK\DWG\PLAN

USACE PN 200500557