ATTACHMENT A

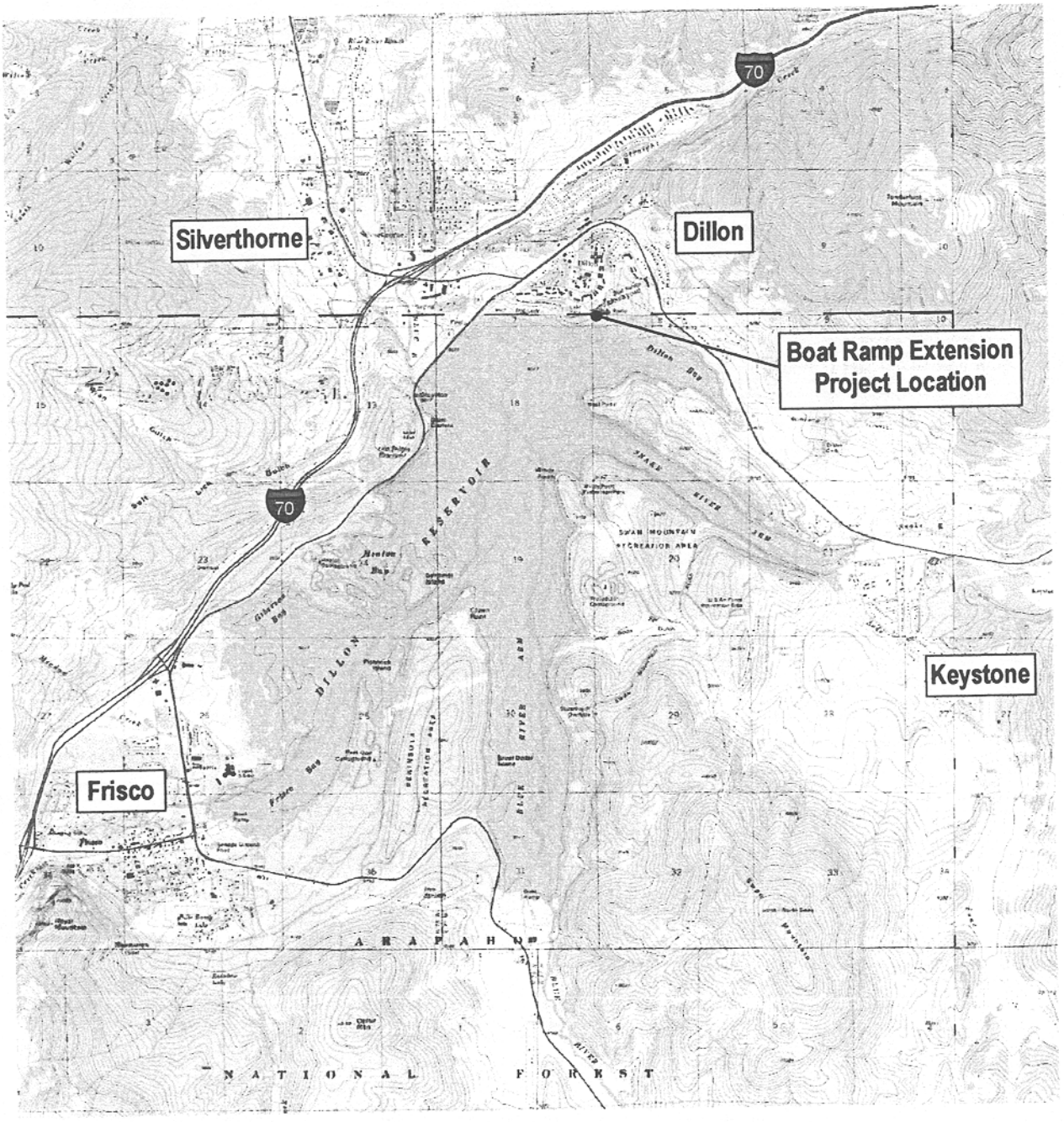

PROJECT LOCATION MAP

Dillon Marina Boat Ramp Extension

Town of Dillon
PUBLIC WORKS DEPT.
275 Lake Dillon Drive
Dillon, CO 80435
(970) 262-3405

Boat Ramp Extension

Drawing 1

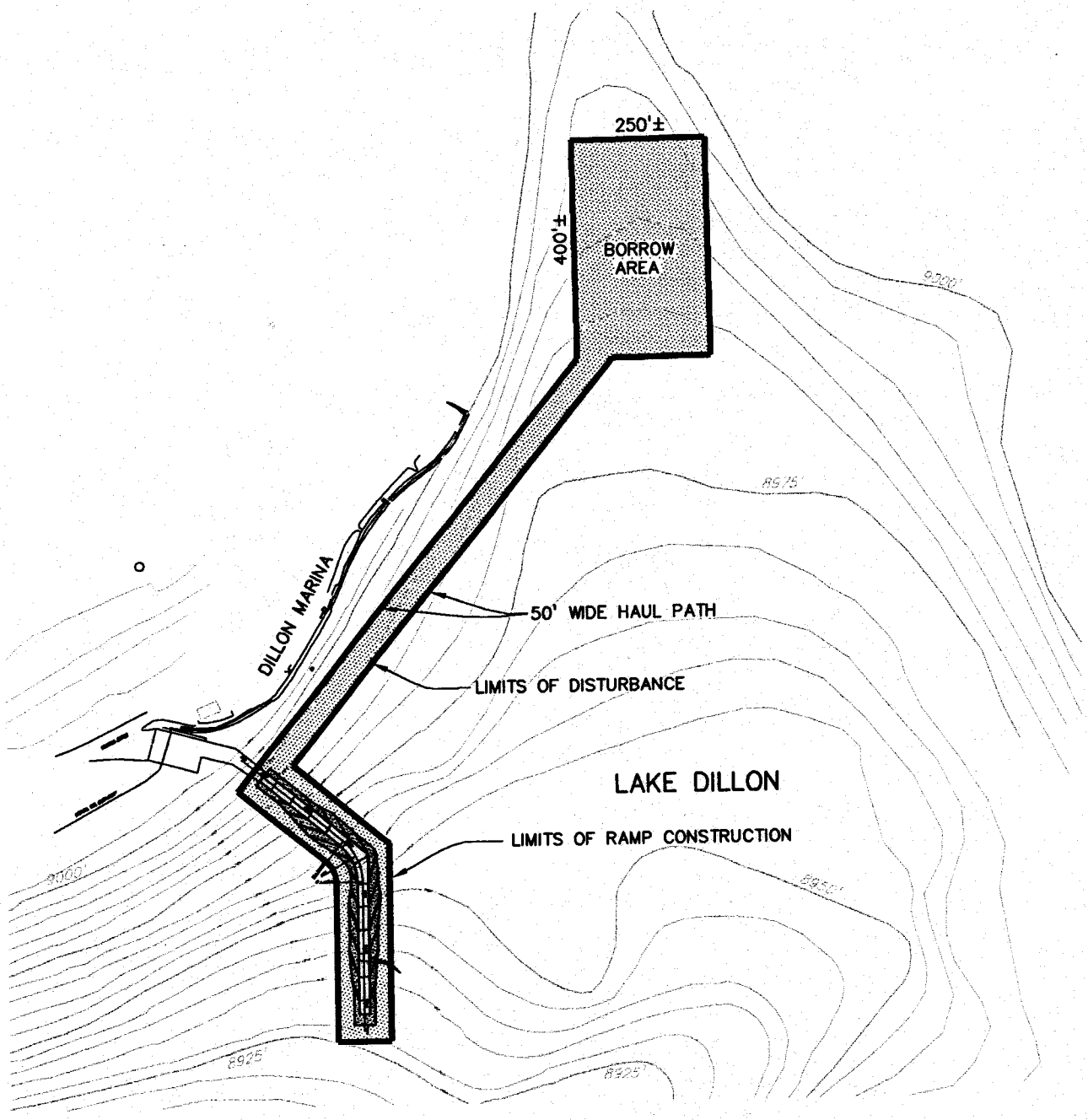

N

APPROXIMATE LIMITS OF DISTURBANCE MAP

SCALE: 1"=300'

Town of Dillon
PUBLIC WORKS DEPT.
275 Lake Dillon Drive
Dillon, CO 80435
(970) 262-3405

Boat Ramp Extension

Drawing 2

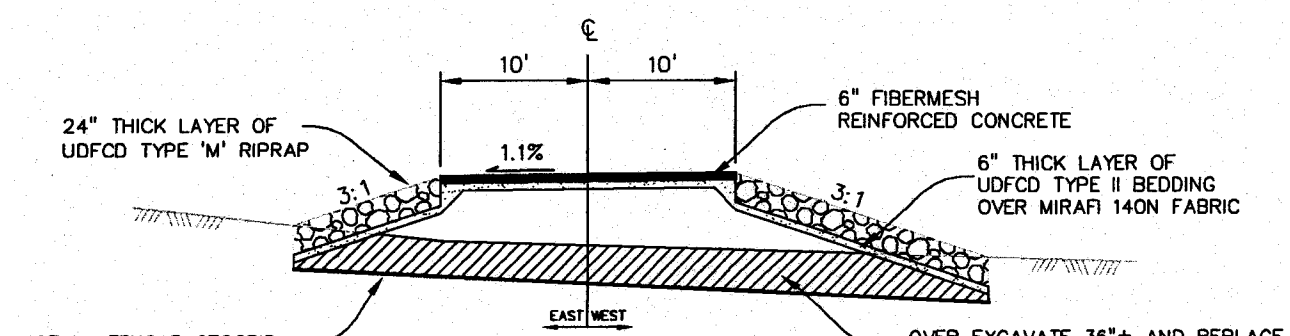

TYPICAL SECTION
STATION 10+00.00 TO 11+90.07
STATION 12+78.59 TO 15+20

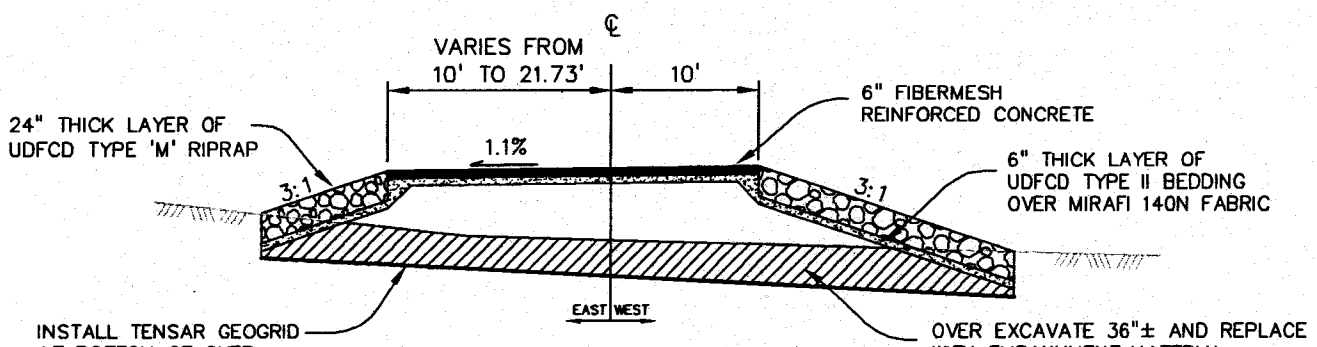

TYPICAL SECTION
STATION 11+90.07 TO 12+78.59

N

TYPICAL RAMP EXTENSION CROSS SECTIONS

NO SCALE

Town of Dillon
PUBLIC WORKS DEPT.
275 Lake Dillon Drive
Dillon, CO 80435
(970) 262-3405

Boat Ramp Extension

DILLON COLORADO

Drawing 3

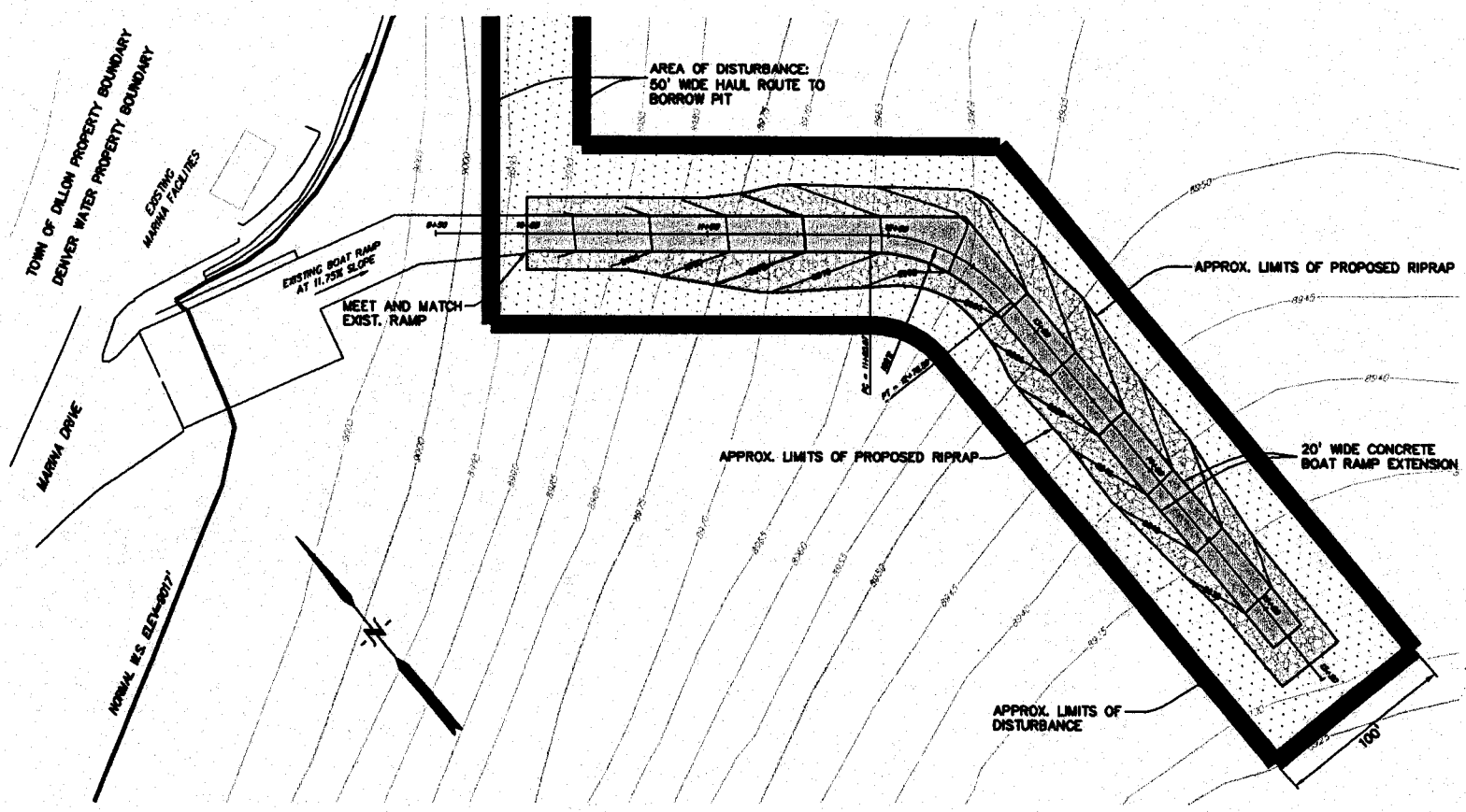

DETAILED RAMP EXTENSION PLAN

1"=100'

Town of Dillon
PUBLIC WORKS DEPT.
275 Lake Dillon Drive
Dillon, CO 80435
(970) 262-3405

Boat Ramp Extension

Drawing 4

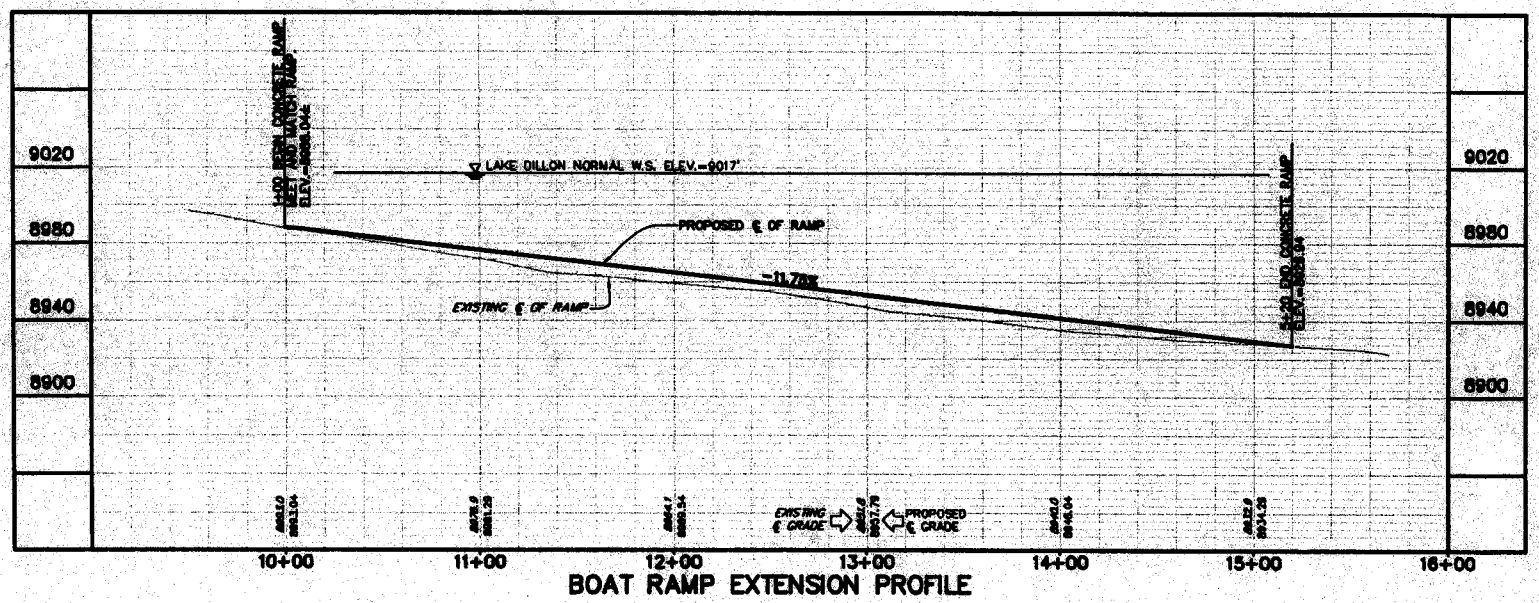

DETAILED RAMP EXTENSION PROFILE

1"=100'