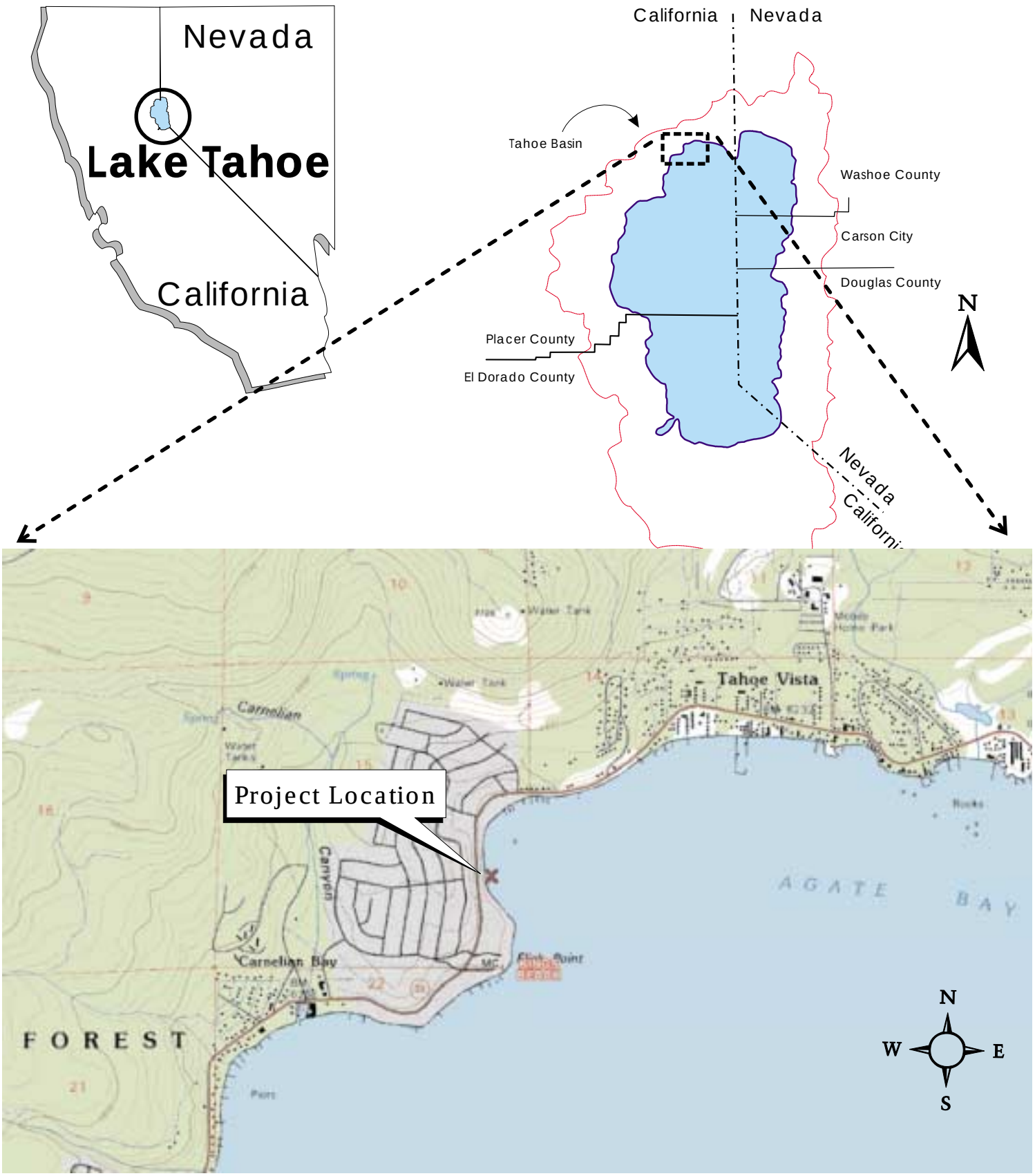

Based on © Delorme Maps
X-Maps 3.5 with Quadrangle Names

Project Location Maps

Agate Pier & Swim Club, Inc.
Lake Tahoe
March 2003
Corps Number: 200325008
Sheet 1 of 3

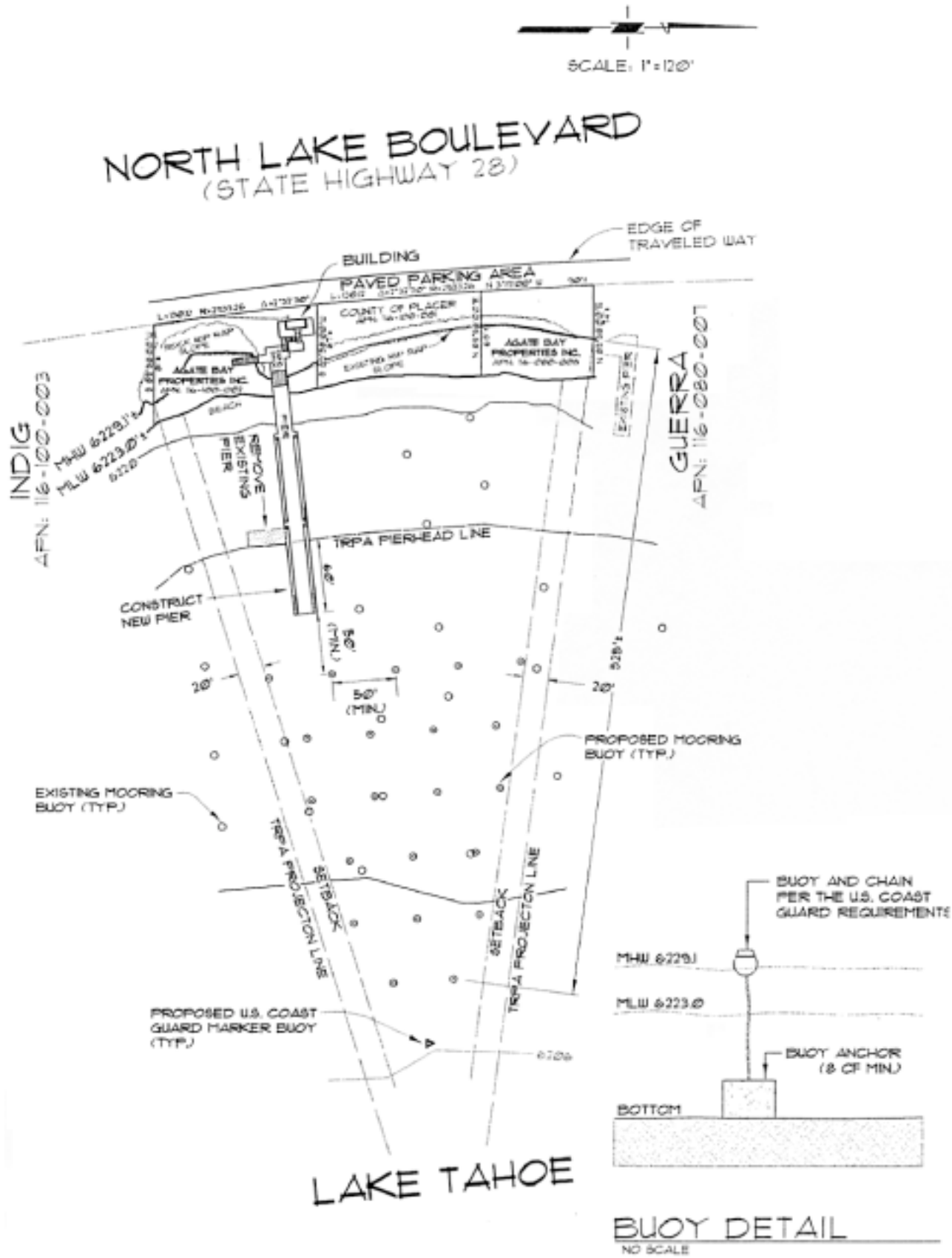

Top View of Project Site

Agate Pier & Swim Club, Inc.
Lake Tahoe
March 2003
Corps Number: 200325008
Sheet 2 of 3

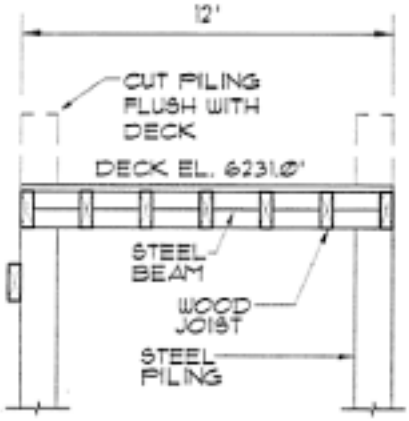

TYPICAL PIER WALKWAY
NO SCALE

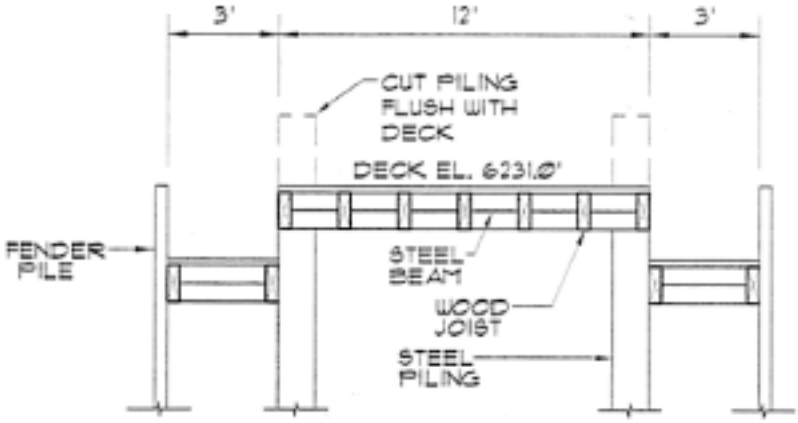

TYPICAL PIERHEAD SECTION
NO SCALE

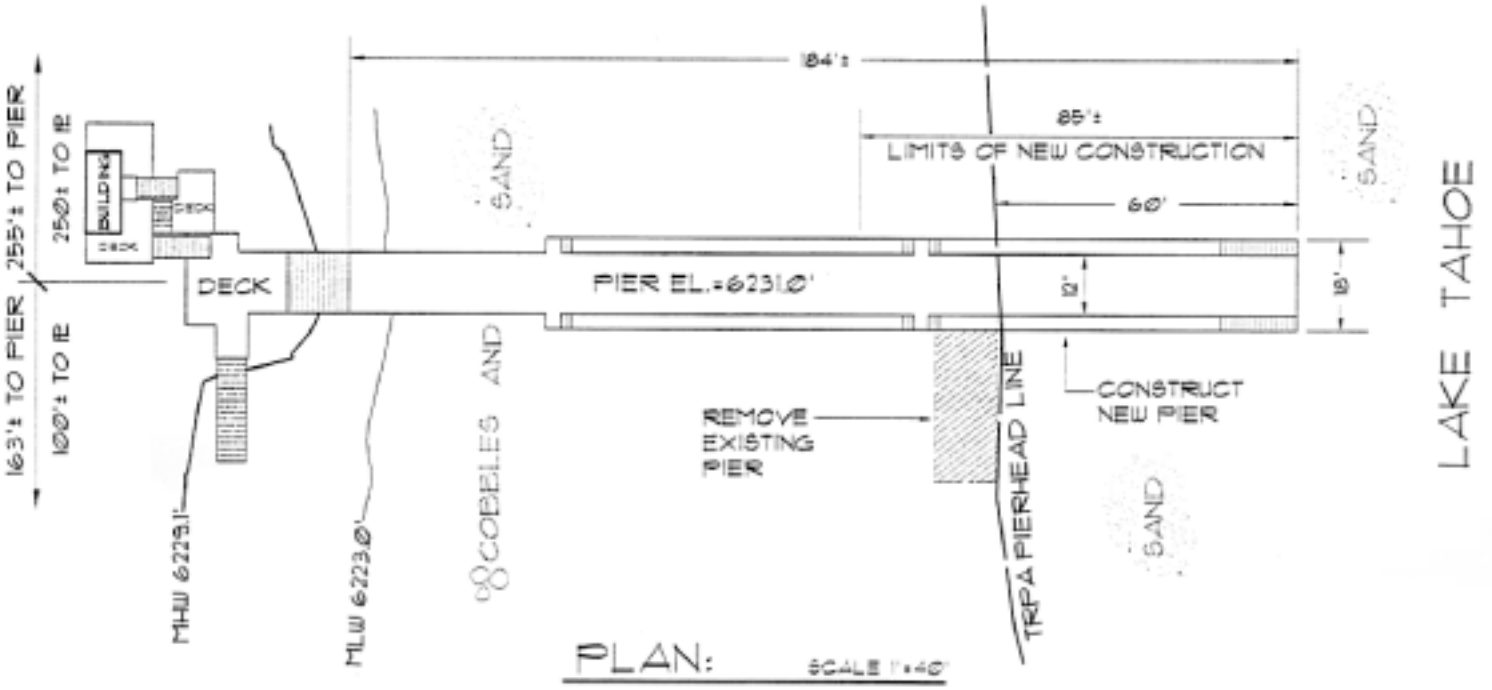

PLAN: SCALE 1"=40'

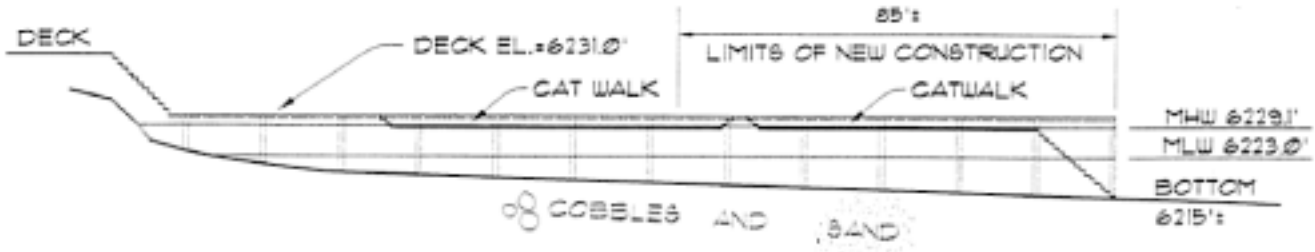

PROFILE: SCALE 1"=40'

Cross Sections & Top View of Pier

Agate Pier & Swim Club, Inc.
Lake Tahoe
March 2003
Corps Number: 200325008
Sheet 3 of 3