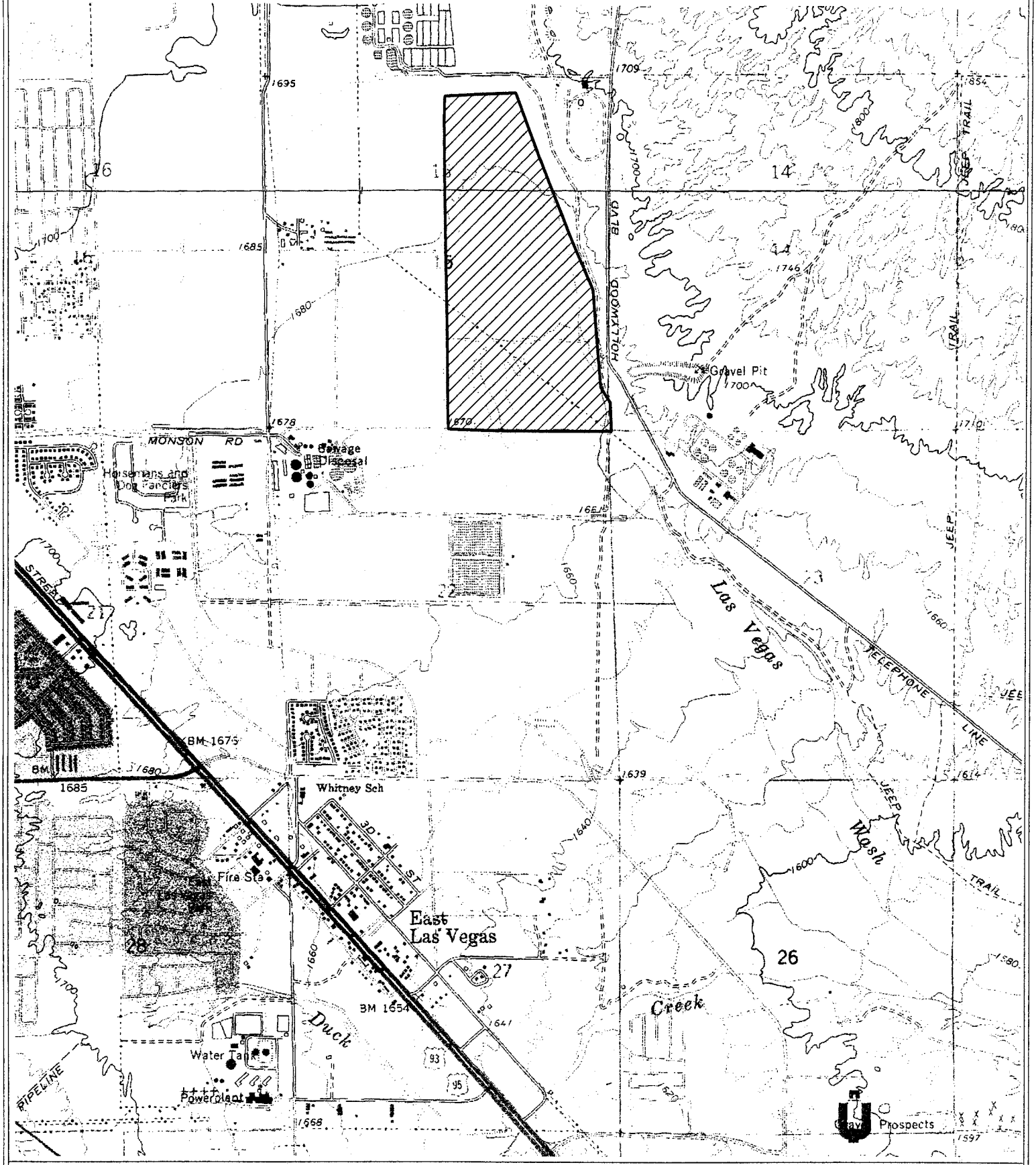

N

1 inch equals 2,000 feet

0 500 1,000 2,000 3,000

Feet

Source: 1:24,000 DRG-USGS

Legend

DIMP

NEVADA

CLARK COUNTY

Figure 1
USGS Map, annotated

PBSJ
901 N Green Valley Pkwy, Suite 100
Henderson, Nevada 89074-6139
Phone: 702/263-7275
Fax: 702/263-7200

1/9/02 MC P:\Projects\pubwrks\SilverCreekWetlands\Figure1_USGS.mxd

DESERT INN MASTER PLAN
JOHN LAING HOMES
MARCH 2002

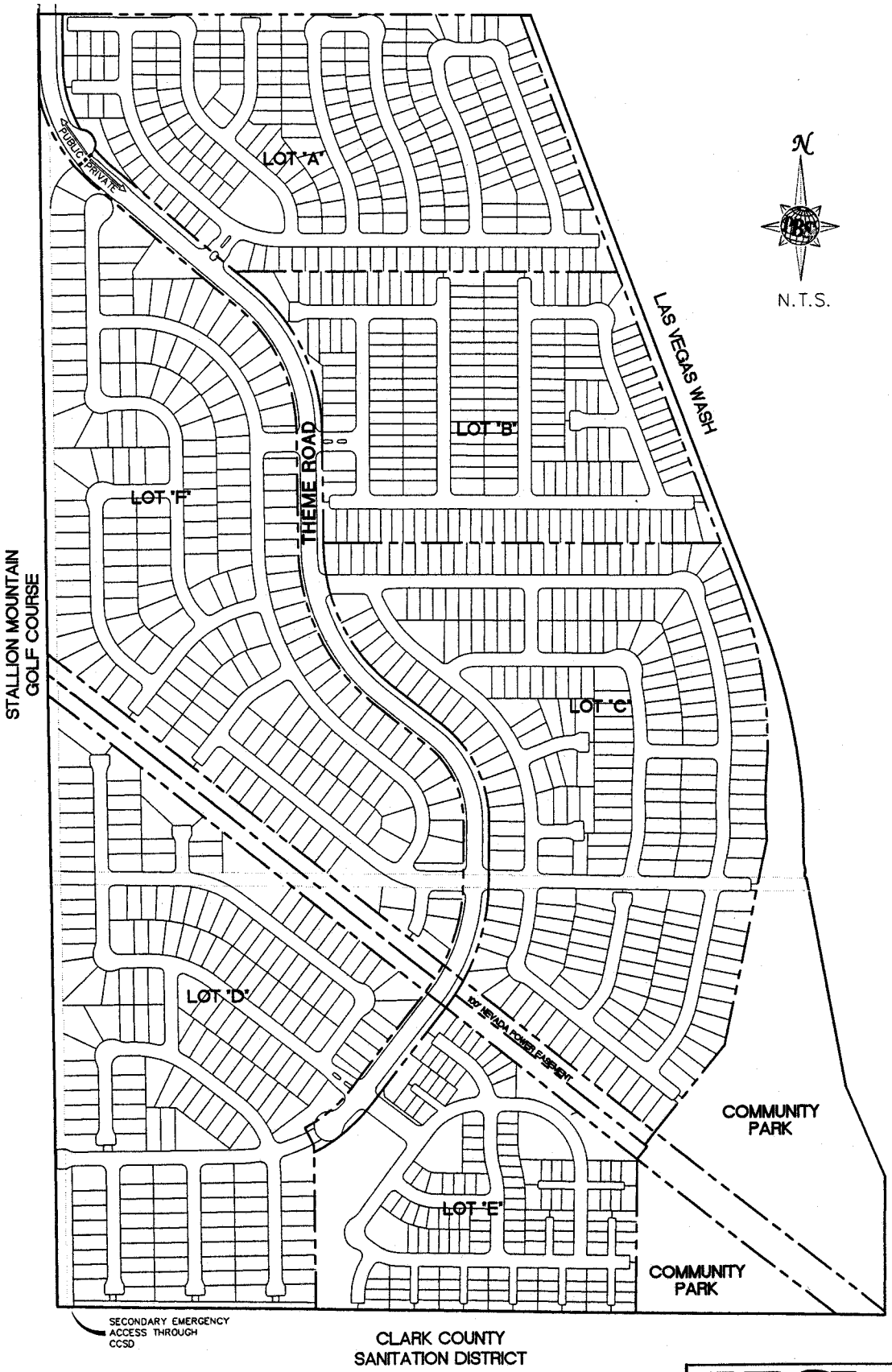

PBSJ
501 N. Green Valley Pkwy.
Suite 100
Henderson, Nevada 89014
Telephone 702/263-7275
Fax 702/263-7200
ENGINEERING · PLANNING · SURVEYING · CONSTRUCTION SERVICES

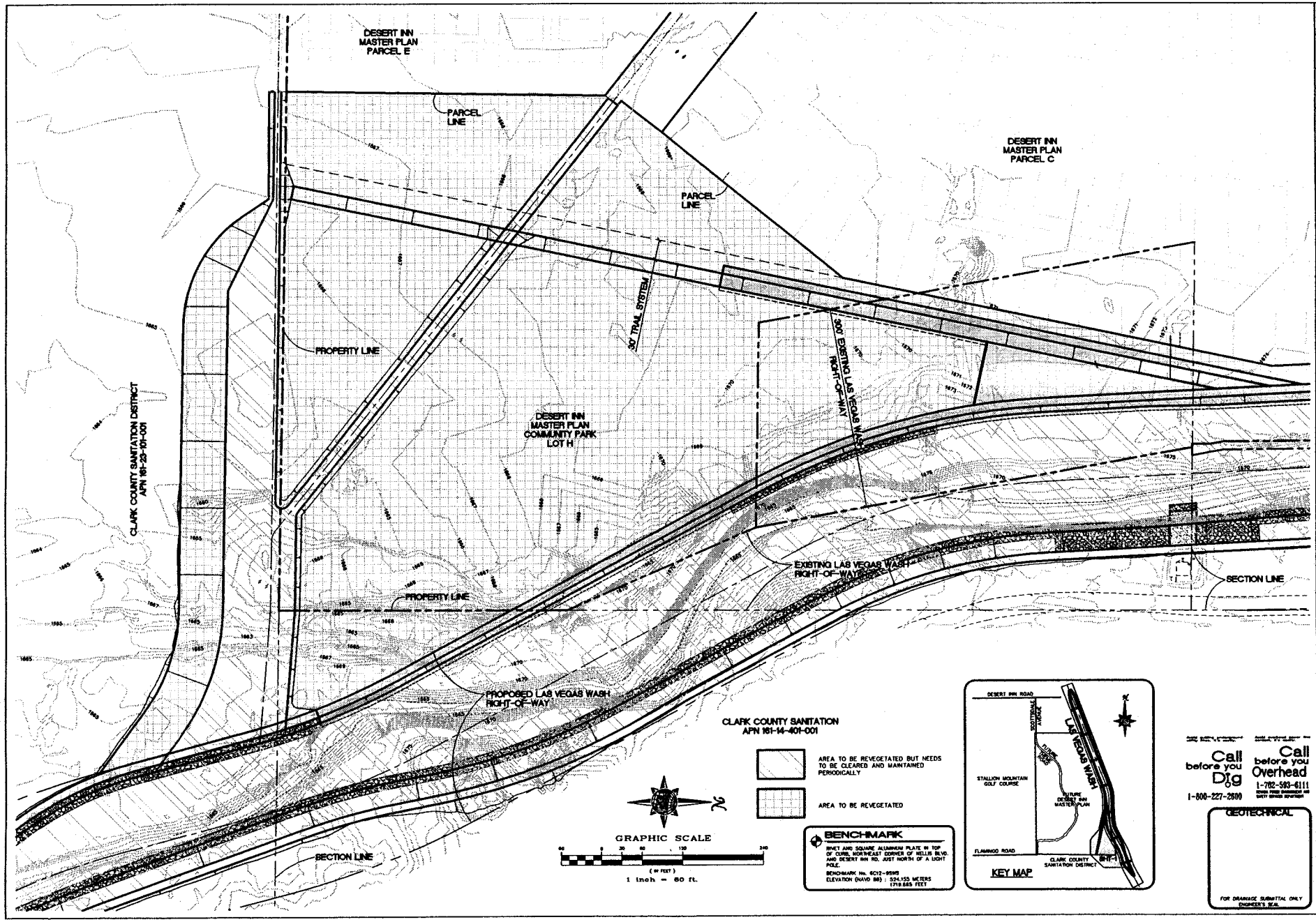

No.	REVISIONS	Date	Appr.	Date

PBSJ

JOHN LAING HOMES

DESERT INN MASTER PLAN IMPROVEMENT PLANS FOR THE LAS VEGAS WASH GEOTECHNICAL EXHIBIT 1

Job Number	Drawn by	Scale
511336	JTA	1"=60'
	Checked by	File No.
	LMF	1336-LVW
Sheet Number	Date	
1 OF 2	03-26-02	

DRAWING: 1336-LVW-GEOTECH-EXHIBIT

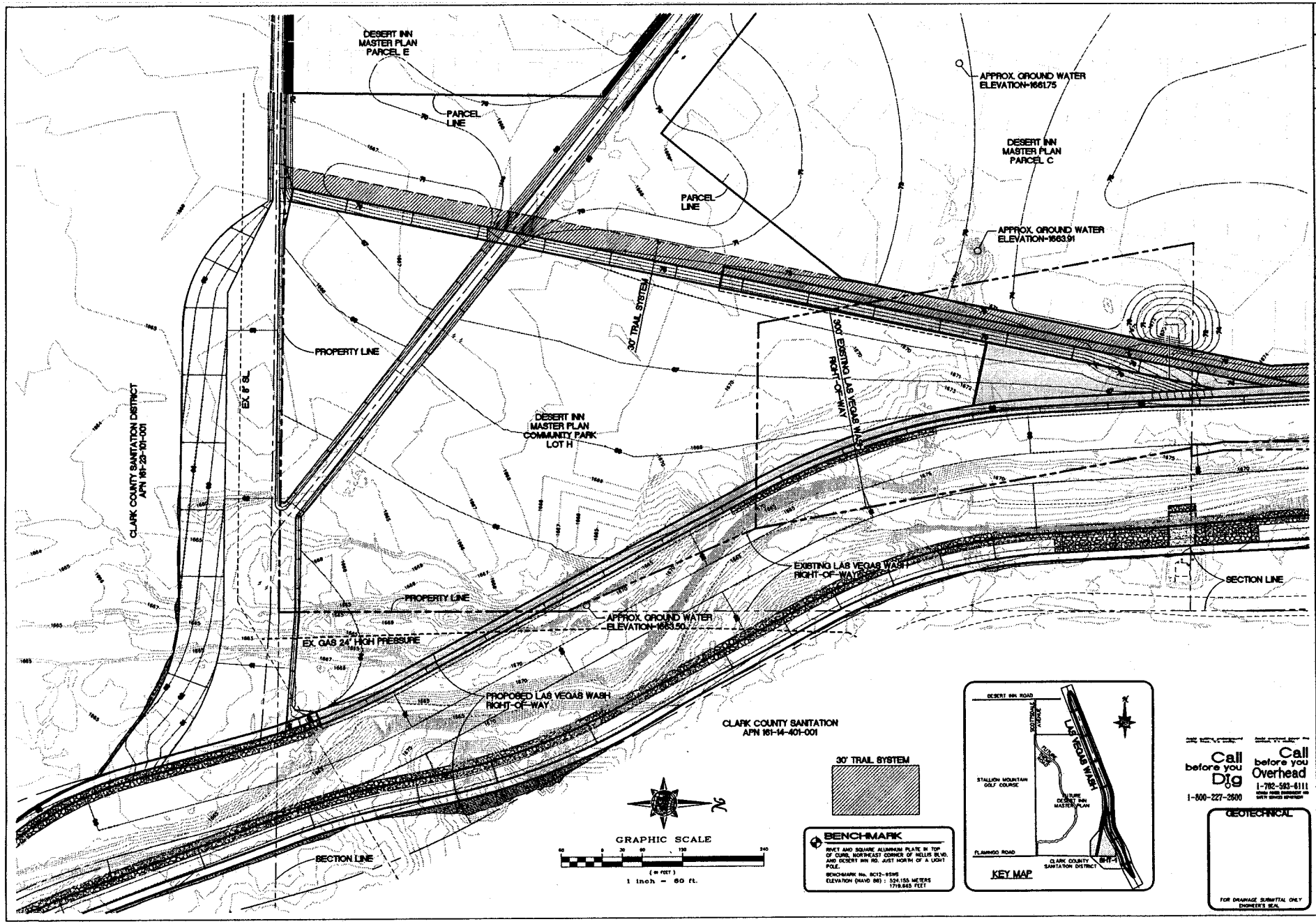

No.	REVISIONS	Date	Init.	Appr.	Date

PBSJ

JOHN LAING HOMES

DESERT INN MASTER PLAN IMPROVEMENT PLANS FOR THE LAS VEGAS WASH GEOTECHNICAL EXHIBIT 1

Job Number 511336	Drawn by JTA	Scale 1"=60'	
Sheet Number 1 OF 2	Checked by LMF	File No. 1336-LVW	
	Date 03-26-02		

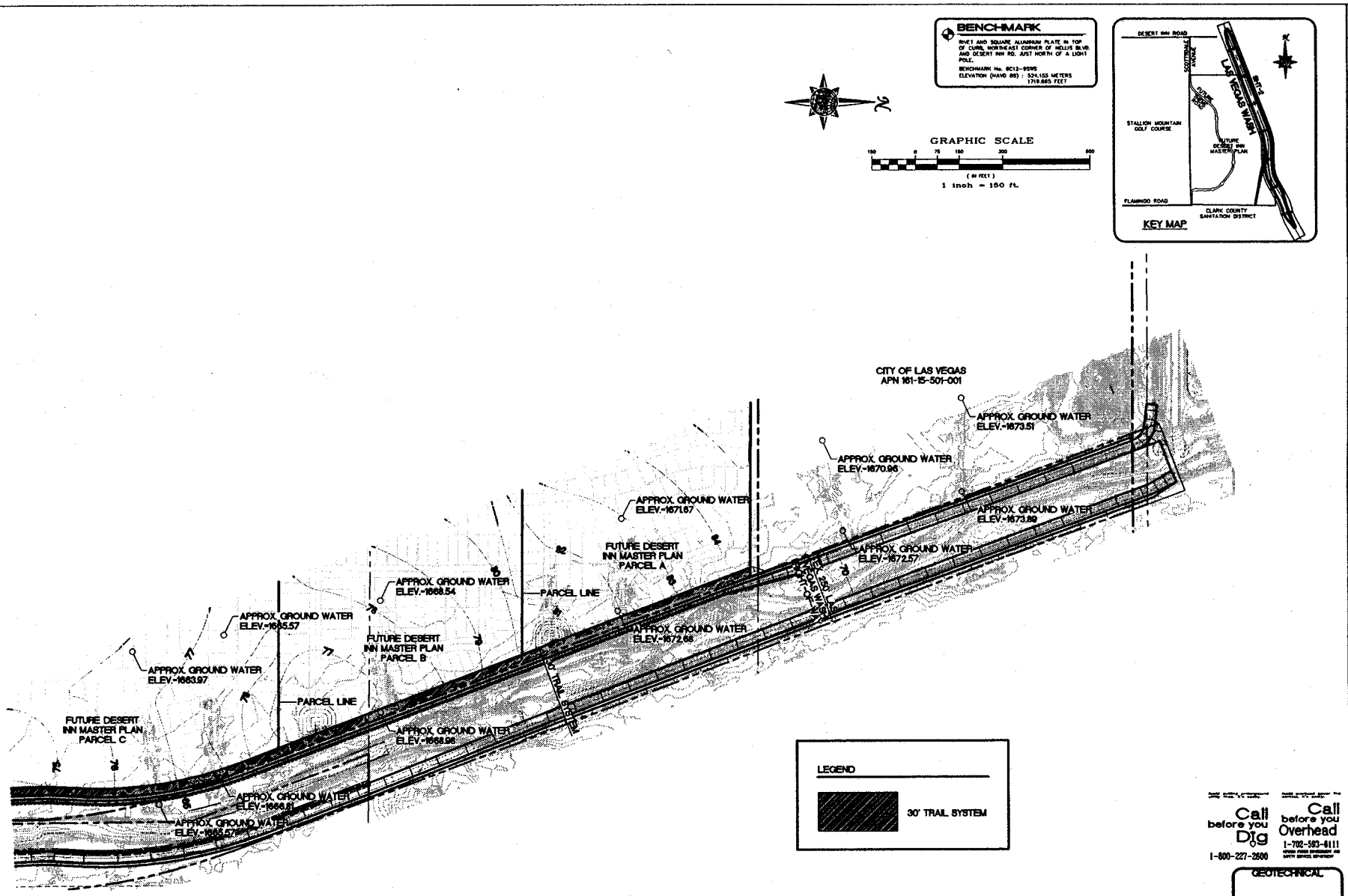

Call before you Dig
1-800-227-2600

Call before you Overhead
1-702-593-8111

GEOTECHNICAL

ENGINEER'S SEAL

No.	REVISIONS	Date	Insit.	APPR.	Date

PBSJ

JOHN LAING HOMES

DESERT INN MASTER PLAN
IMPROVEMENT PLANS FOR
THE LAS VEGAS WASH
GEOTECHNICAL
EXHIBIT 2

Drawn by JTA	Scale 1"=150'	File No. 1336-LVW	
Checked by LJF			
Job Number 511336	Date 03-26-02	Sheet Number 2 OF 2	

DRAWING: 1336-LVW-GEOTECH-EXHIBIT

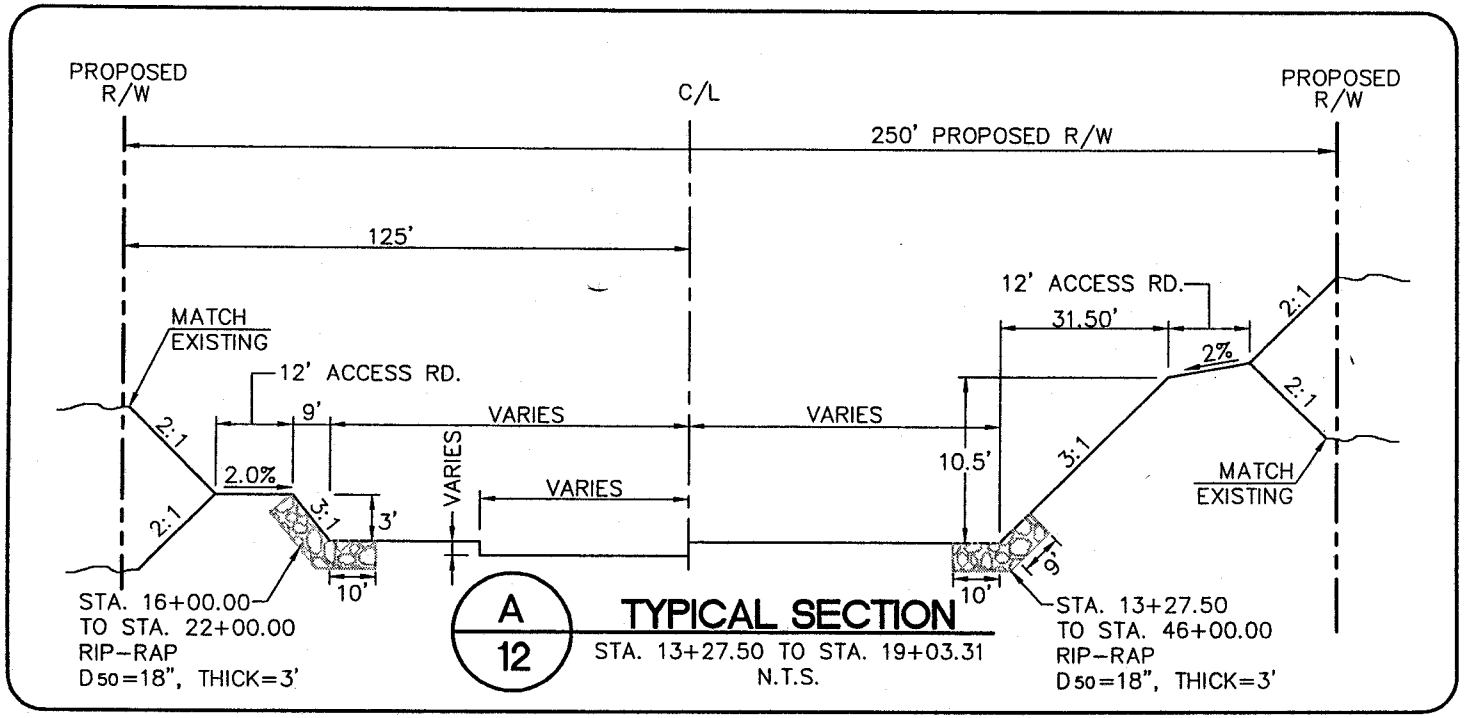

A
12

TYPICAL SECTION

STA. 13+27.50 TO STA. 19+03.31
N.T.S.

PBS&J
901 N. Green Valley Pkwy.
Suite 100
Henderson, Nevada 89014
Telephone: 702/263-7275
Fax: 702/263-7200
ENGINEERING PLANNING • SURVEYING CONSTRUCTION SERVICES

NOT TO SCALE

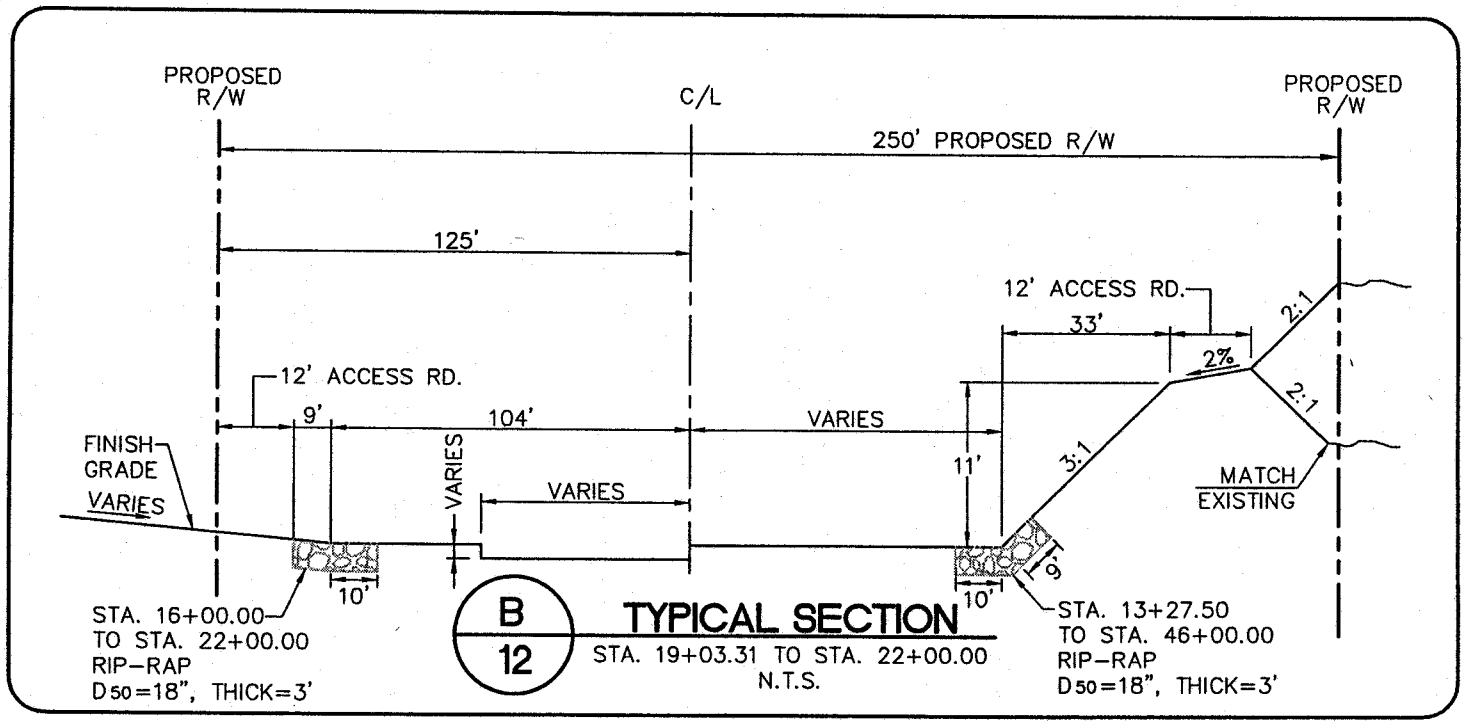

B
12

TYPICAL SECTION

STA. 19+03.31 TO STA. 22+00.00
N.T.S.

PBS&J
901 N. Green Valley Pkwy.
Suite 100
Henderson, Nevada 89014
Telephone: 702/263-7275
Fax: 702/263-7200
ENGINEERING PLANNING · SURVEYING CONSTRUCTION SERVICES

NOT TO SCALE

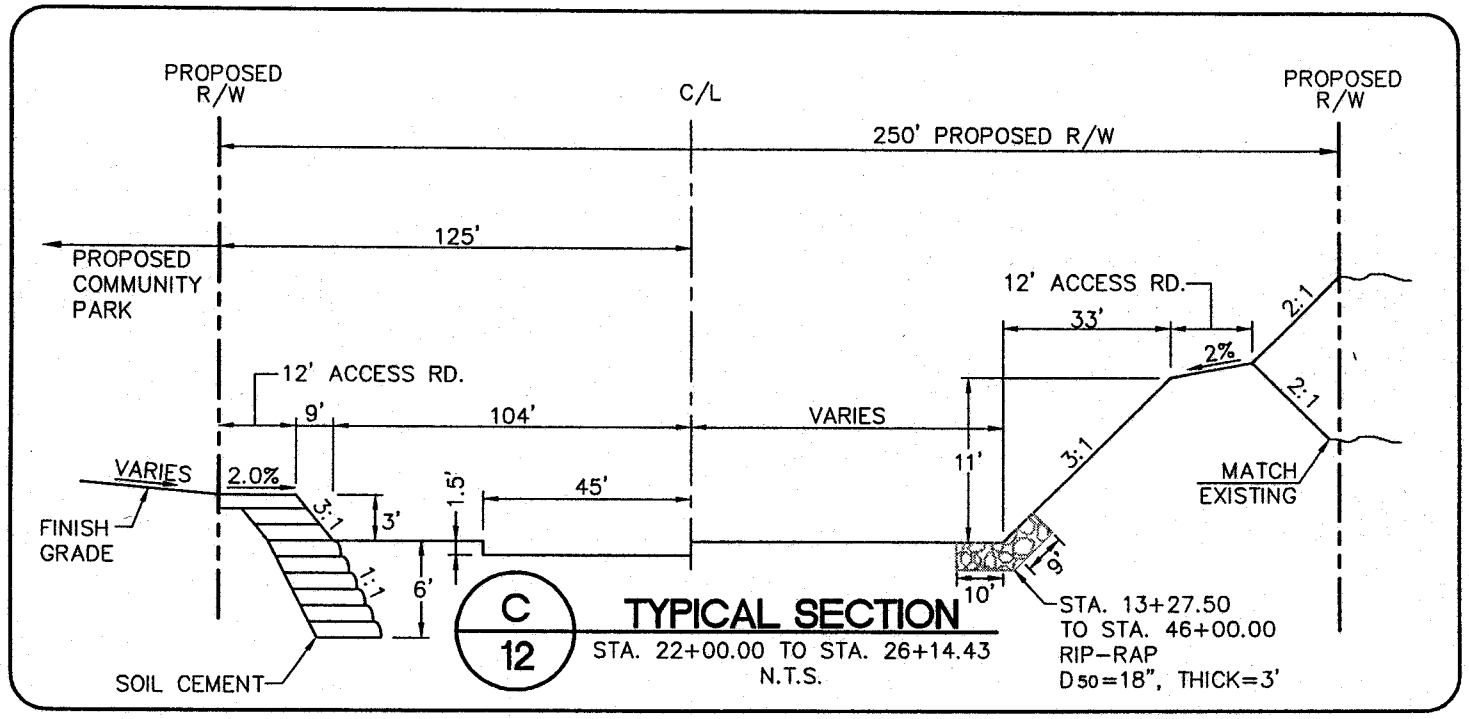

C/12 **TYPICAL SECTION**

STA. 22+00.00 TO STA. 26+14.43

N.T.S.

PBS&J

901 N. Green Valley Pkwy.
Suite 100
Henderson, Nevada 89014
Telephone: 702/263-7275
Fax: 702/263-7200

ENGINEERING PLANNING · SURVEYING CONSTRUCTION SERVICES

NOT TO SCALE

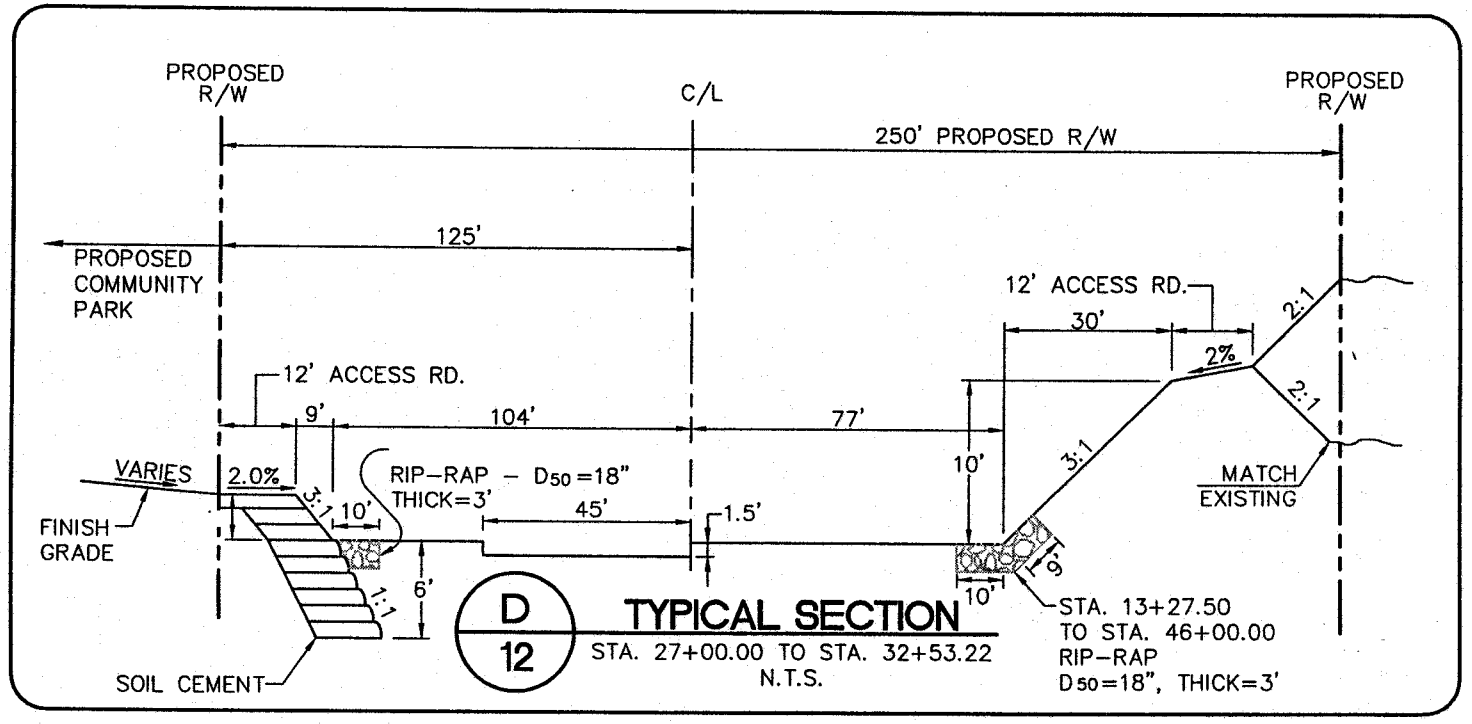

D
12

TYPICAL SECTION

STA. 27+00.00 TO STA. 32+53.22
N.T.S.

PBS&J

901 N. Green Valley Pkwy.
Suite 100
Henderson, Nevada 89014
Telephone: 702/263-7275
Fax: 702/263-7200

ENGINEERING PLANNING · SURVEYING CONSTRUCTION SERVICES

NOT TO SCALE

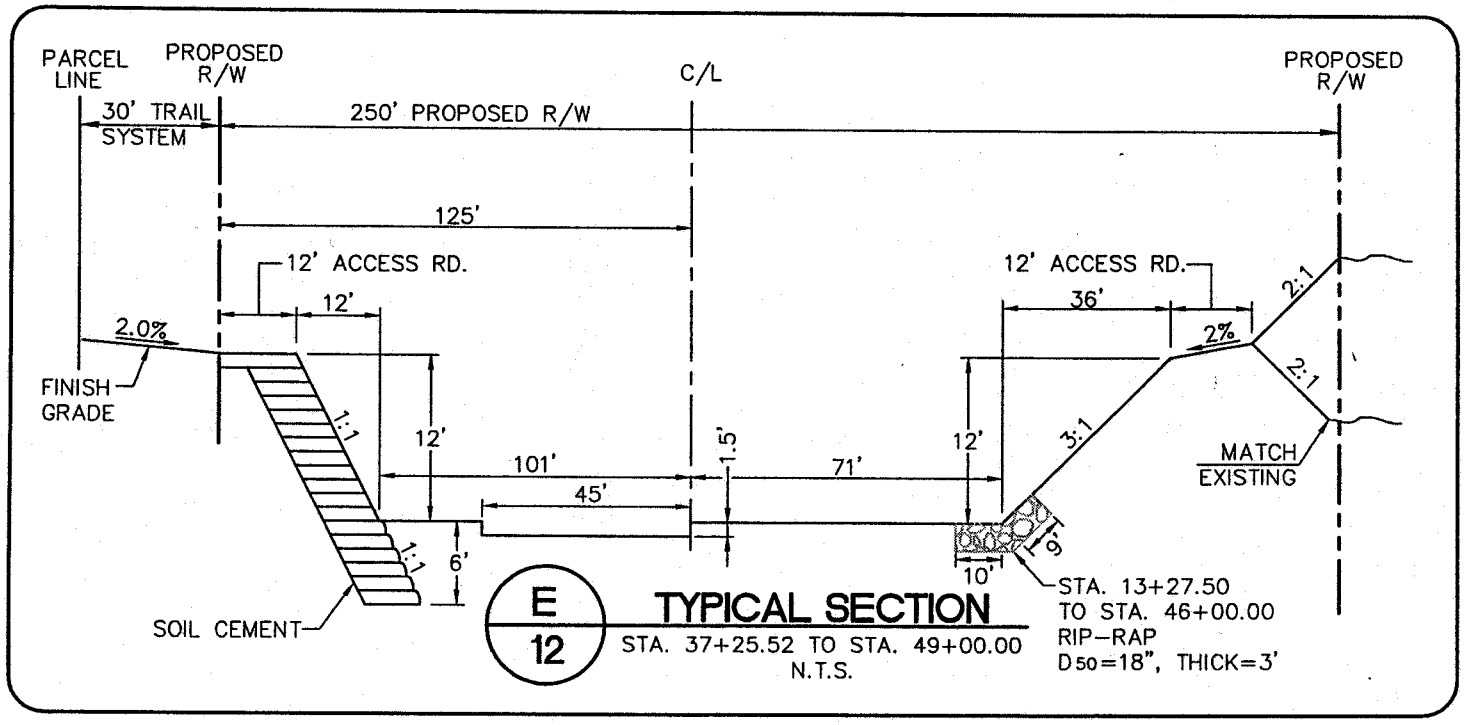

E
12

TYPICAL SECTION

STA. 37+25.52 TO STA. 49+00.00
N.T.S.

PBS&J
901 N. Green Valley Pkwy.
Suite 100
Henderson, Nevada 89014
Telephone: 702/263-7275
Fax: 702/263-7200
ENGINEERING PLANNING · SURVEYING CONSTRUCTION SERVICES

NOT TO SCALE

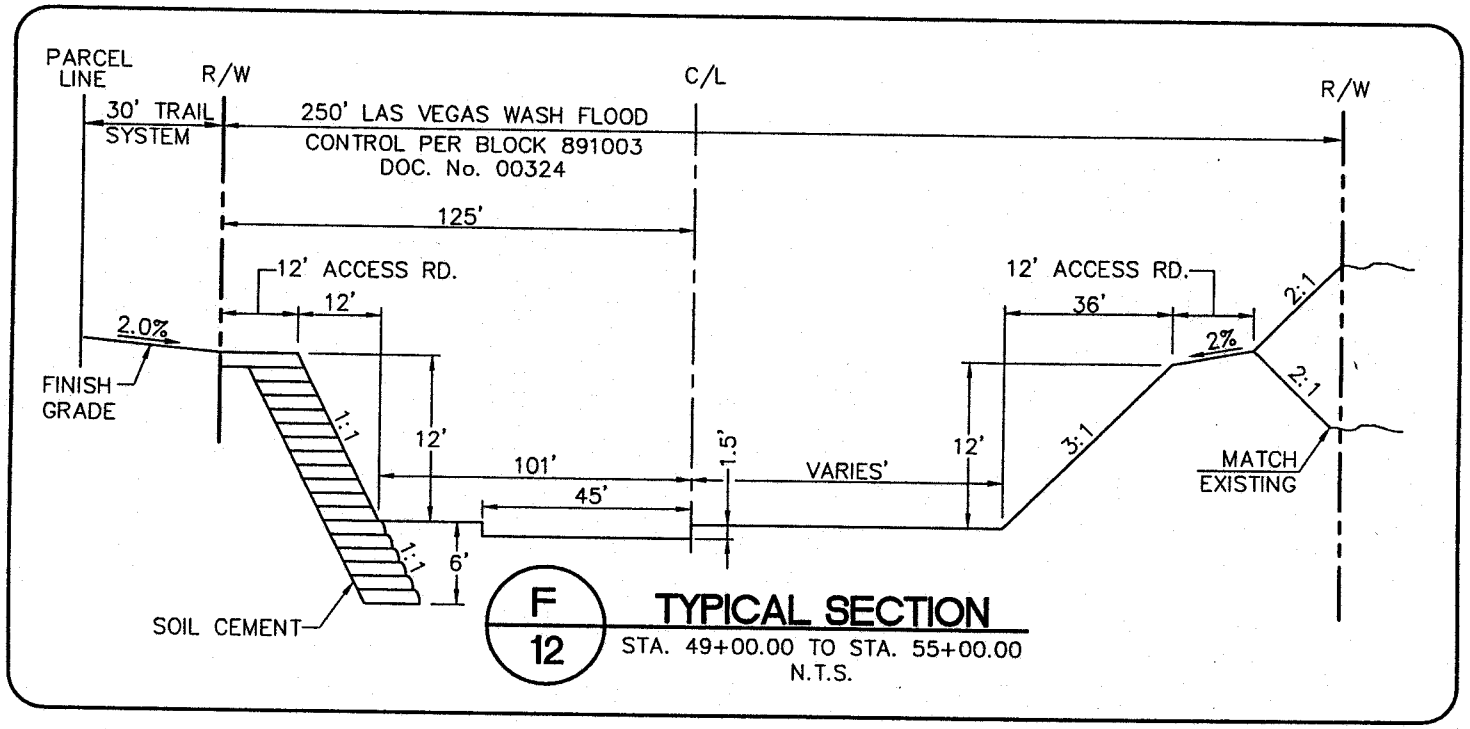

PBS&J
901 N. Green Valley Pkwy.
Suite 100
Henderson, Nevada 89014
Telephone: 702/263-7275
Fax: 702/263-7200
ENGINEERING PLANNING • SURVEYING CONSTRUCTION SERVICES

NOT TO SCALE

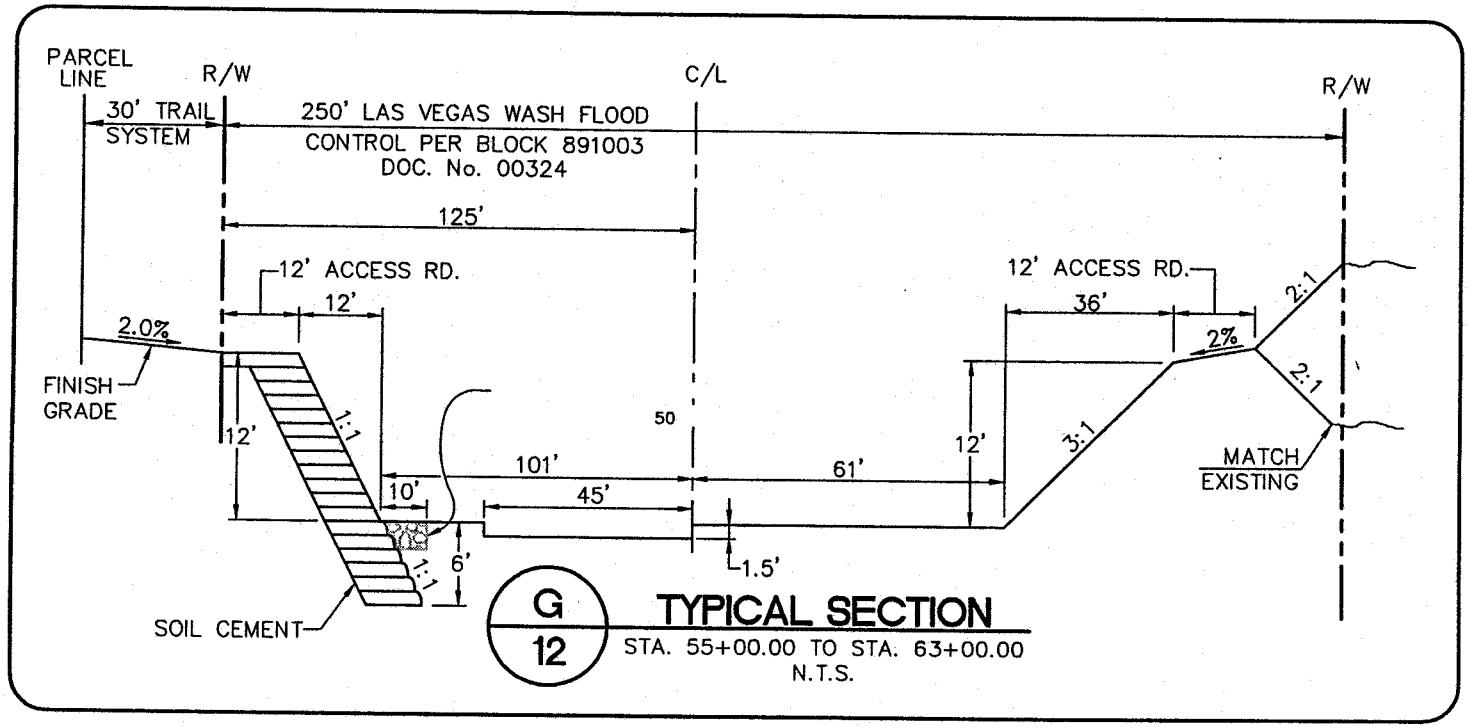

PBS&J
901 N. Green Valley Pkwy.
Suite 100
Henderson, Nevada 89014
Telephone: 702/263-7275
Fax: 702/263-7200
ENGINEERING PLANNING • SURVEYING CONSTRUCTION SERVICES

NOT TO SCALE

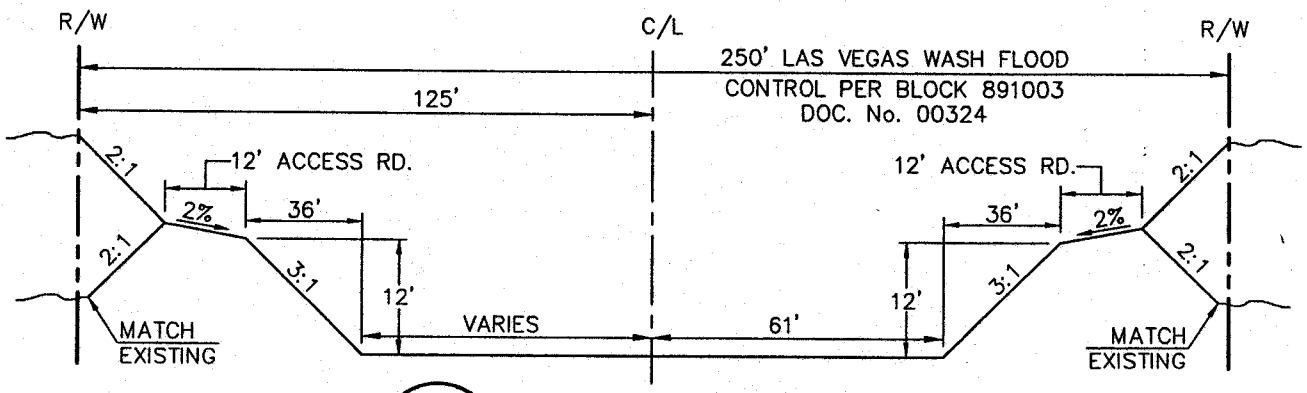

H
12

TYPICAL SECTION

STA. 66+50.00 TO STA. 76+45.33
N.T.S.

PBS&J
901 N. Green Valley Pkwy.
Suite 100
Henderson, Nevada 89014
Telephone: 702/263-7275
Fax: 702/263-7200
ENGINEERING PLANNING · SURVEYING CONSTRUCTION SERVICES

NOT TO SCALE

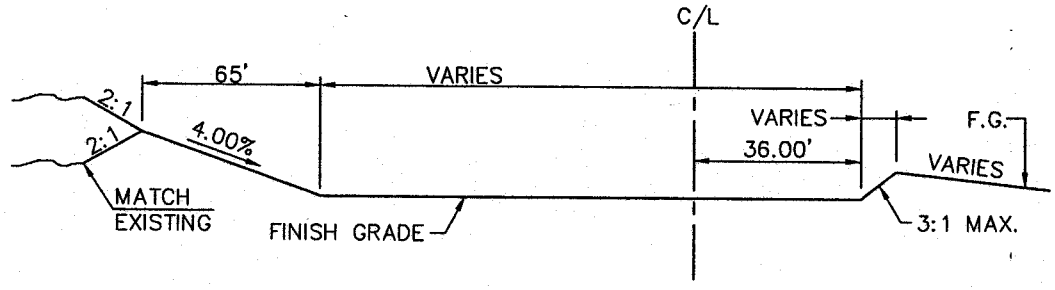

1
12

TYPICAL SECTION

N.T.S.

PBS&J

901 N. Green Valley Pkwy.
Suite 100
Henderson, Nevada 89014
Telephone: 702/263-7275
Fax: 702/263-7200

ENGINEERING PLANNING • SURVEYING CONSTRUCTION SERVICES

NOT TO SCALE

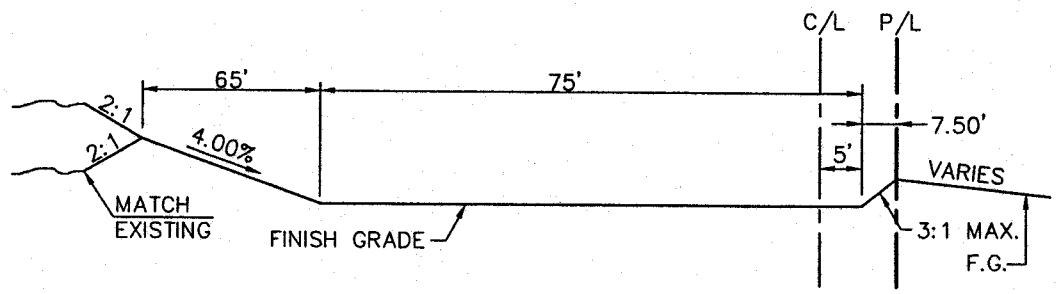

J
12

TYPICAL SECTION

N.T.S.

PBS&J
901 N. Green Valley Pkwy.
Suite 100
Henderson, Nevada 89014
Telephone: 702/263-7275
Fax: 702/263-7200
ENGINEERING PLANNING · SURVEYING CONSTRUCTION SERVICES

NOT TO SCALE

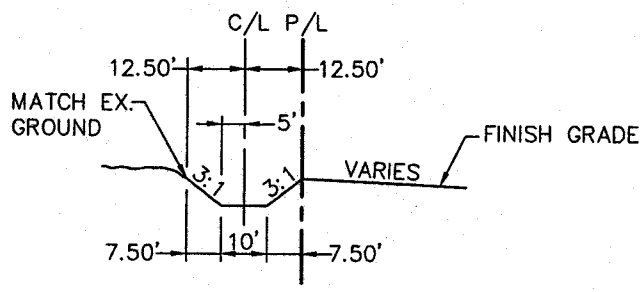

K
12

TYPICAL SECTION

N.T.S.

PBS&J
901 N. Green Valley Pkwy.
Suite 100
Henderson, Nevada 89014
Telephone: 702/263-7275
Fax: 702/263-7200
ENGINEERING PLANNING · SURVEYING CONSTRUCTION SERVICES

NOT TO SCALE

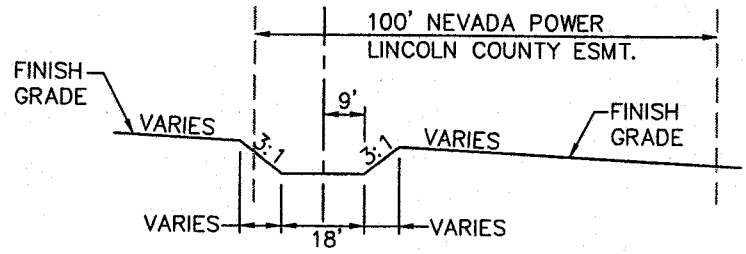

L
12

TYPICAL SECTION

N.T.S.

PBS&J
901 N. Green Valley Pkwy.
Suite 100
Henderson, Nevada 89014
Telephone: 702/263-7275
Fax: 702/263-7200
ENGINEERING PLANNING • SURVEYING CONSTRUCTION SERVICES

NOT TO SCALE

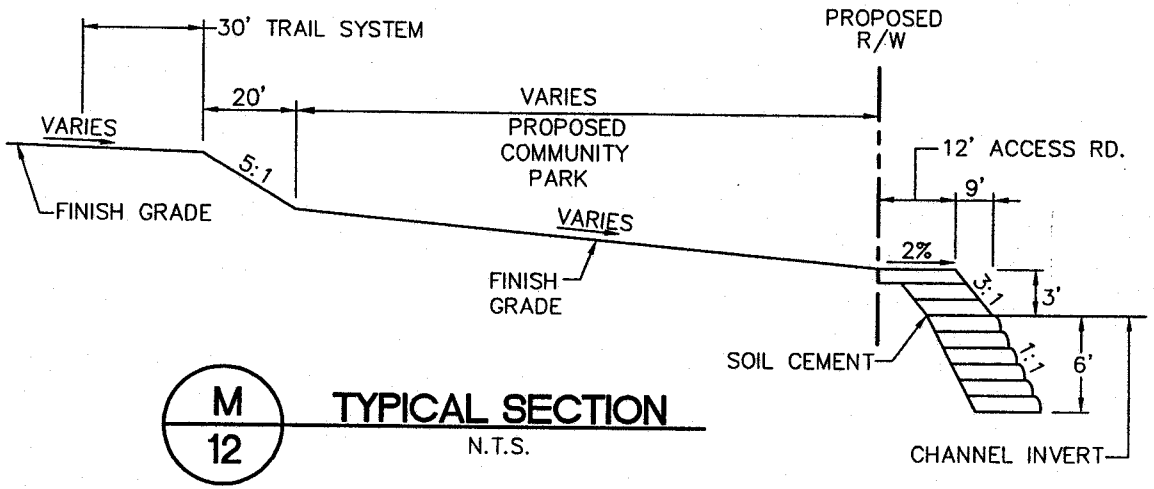

M
12

TYPICAL SECTION

N.T.S.

PBS&J
901 N. Green Valley Pkwy.
Suite 100
Henderson, Nevada 89014
Telephone: 702/263-7275
Fax: 702/263-7200
ENGINEERING PLANNING · SURVEYING CONSTRUCTION SERVICES

NOT TO SCALE

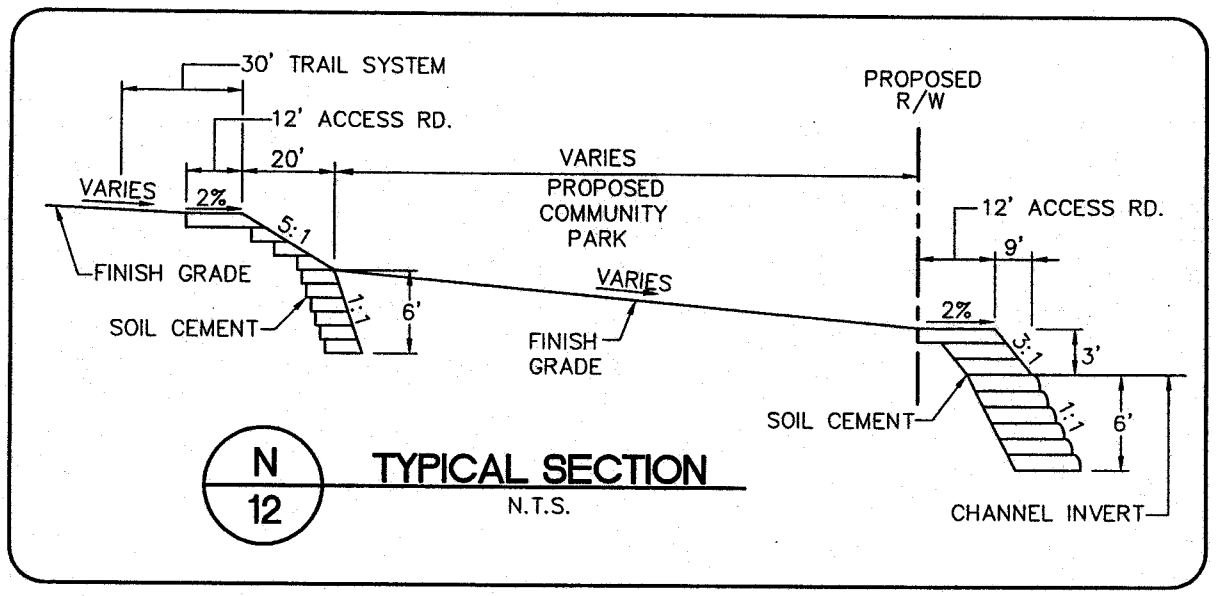

N
12

TYPICAL SECTION

N.T.S.

PBS&J
901 N. Green Valley Pkwy.
Suite 100
Henderson, Nevada 89014
Telephone: 702/263-7275
Fax: 702/263-7200
ENGINEERING PLANNING • SURVEYING CONSTRUCTION SERVICES

NOT TO SCALE

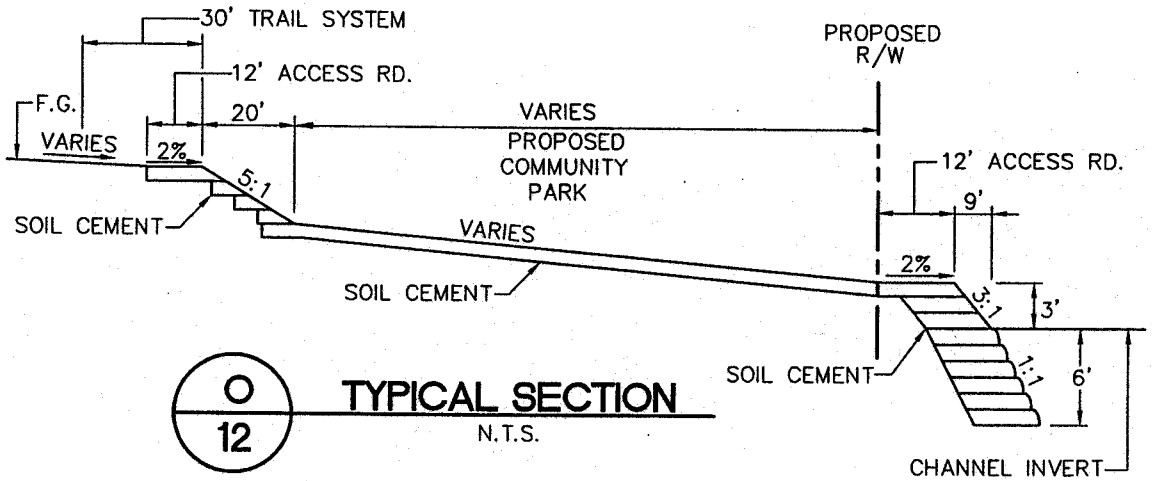

O
12

TYPICAL SECTION

N.T.S.

PBS&J
901 N. Green Valley Pkwy.
Suite 100
Henderson, Nevada 89014
Telephone: 702/263-7275
Fax: 702/263-7200
ENGINEERING PLANNING · SURVEYING CONSTRUCTION SERVICES

NOT TO SCALE

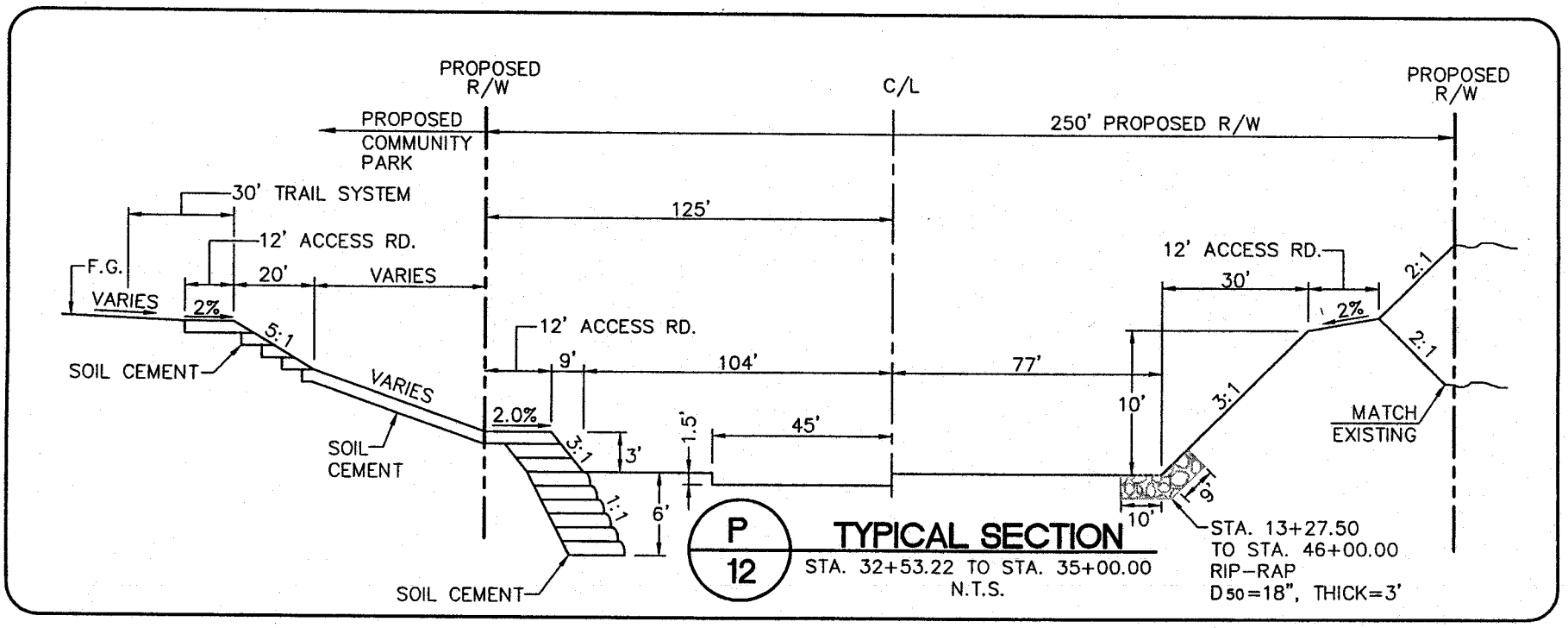

PBS&J
901 N. Green Valley Pkwy.
Suite 100
Henderson, Nevada 89014
Telephone: 702/263-7275
Fax: 702/263-7200
ENGINEERING PLANNING • SURVEYING CONSTRUCTION SERVICES

NOT TO SCALE

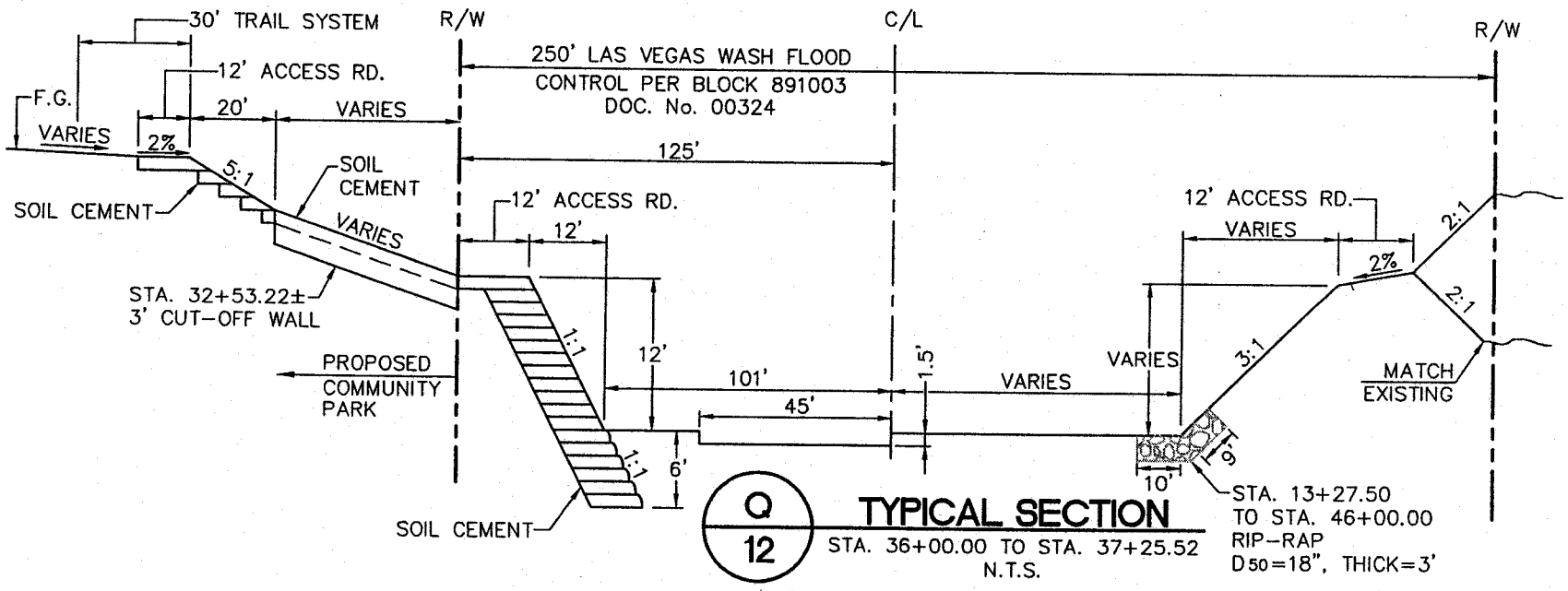

Q
12

TYPICAL SECTION

STA. 36+00.00 TO STA. 37+25.52
N.T.S.

PBS&J

901 N. Green Valley Pkwy.
Suite 100
Henderson, Nevada 89014
Telephone: 702/263-7275
Fax: 702/263-7200

ENGINEERING PLANNING · SURVEYING CONSTRUCTION SERVICES

NOT TO SCALE