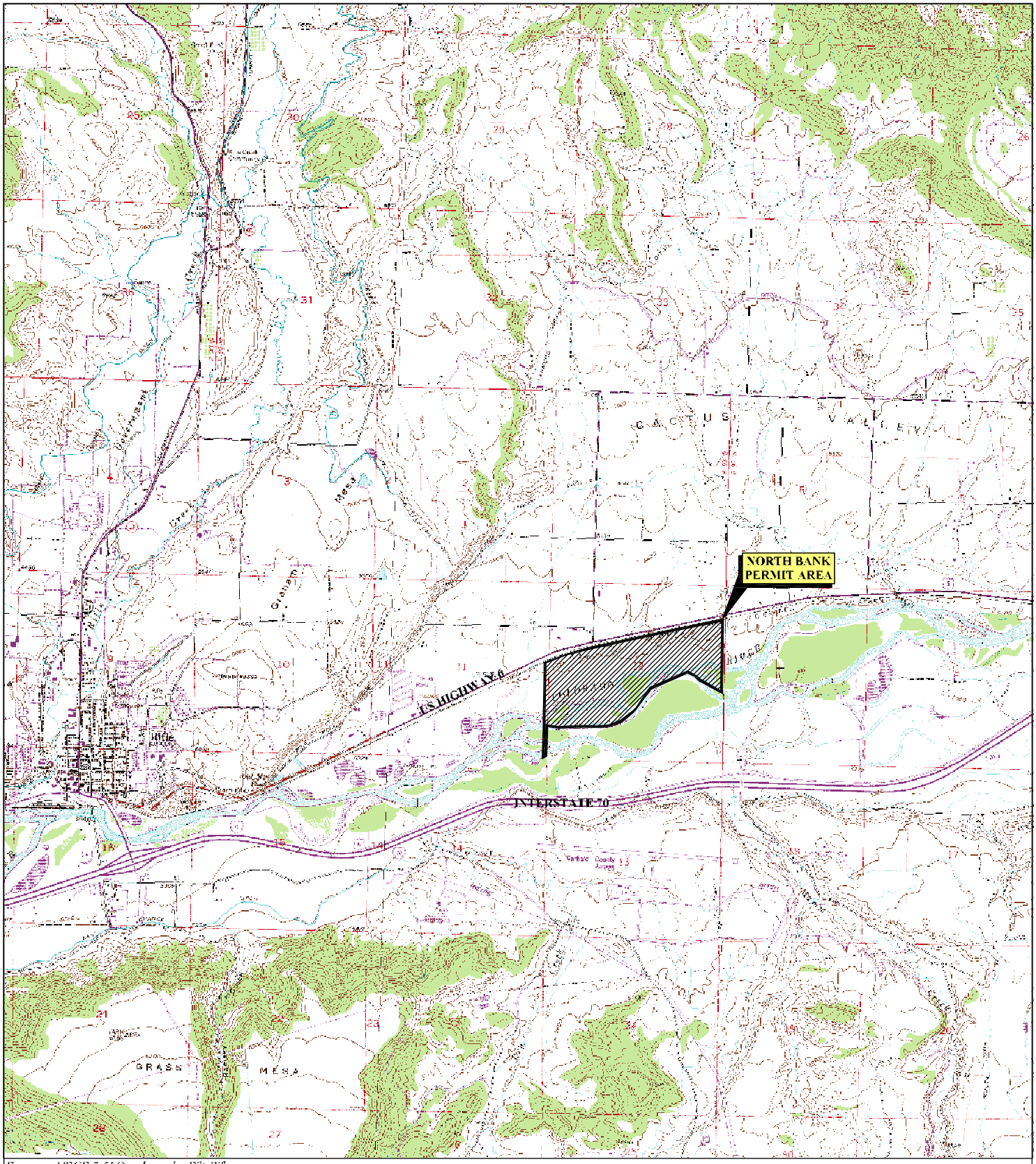

Source: USGS 7.5' Quadrangles Silt, Rifle.

LEGEND

MAP FEATURES

PERMIT BOUNDARY

NORTH

0 1000 2000

Scale in Feet

PROJECTION: NAD 27, UTM ZONE 13, METER

COLORADO
GARFIELD COUNTY

PREPARED BY:
ARCADIS
ARCADIS G&M, Inc.

LAFARGE NORTH AMERICA

NORTH BANK RESOURCES
Garfield County, Colorado

LOCATION MAP

REV	DESCRIPTION	BY	DATE
0	SUBMITTED FOR PERMIT	PBE	9/06

DRAWING FILE: FIGURE 1.dwg
FILE: Figure1

FIGURE 1

DRAWN BY: PBE | PREPARED BY: PBE | DATE: 11/15/2006

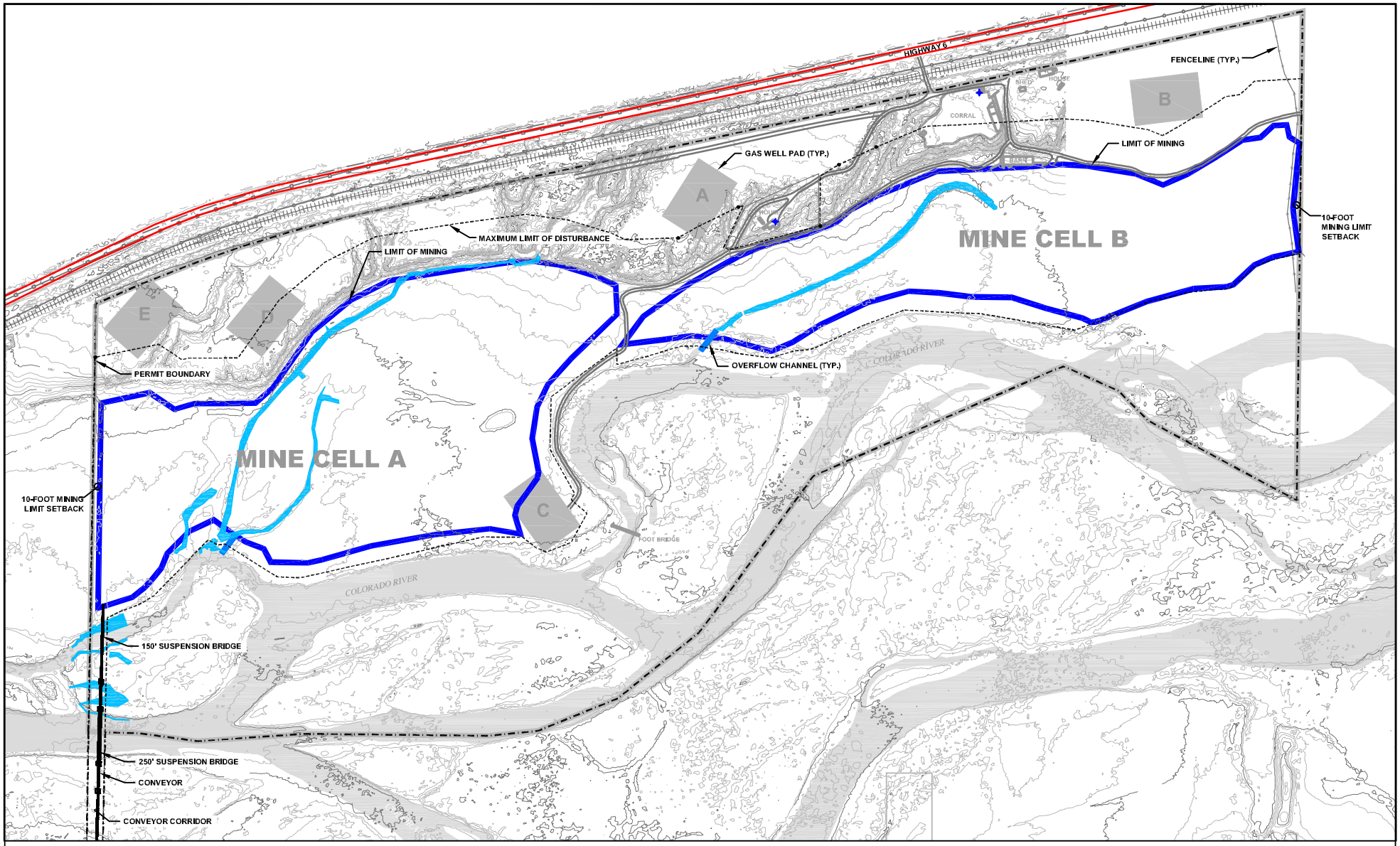

LEGEND

MAP FEATURES

- MINE PERMIT BOUNDARY
- LIMIT OF MINING - PIT CREST
- LIMIT OF DISTURBANCE
- PROPERTY BOUNDARY
- EXISTING MAJOR CONTOUR LINE (10' INTERVAL)
- EXISTING MINOR CONTOUR LINE (5' INTERVAL)
- RAILROAD
- HIGHWAY
- EXISTING ROAD
- FENCE
- POWER LINE
- QWEST FIBER OPTIC CABLE
- MCI FIBER OPTIC CABLE
- GAS WELL PAD
- STRUCTURE
- JURISDICTIONAL WETLANDS

PREPARED BY:
ARCADIS
ARCADIS G&M, Inc.

NORTH

0 600 1200

Scale in Feet

PROJECTION: NAD 27, UTM ZONE 13, METER

LAFARGE NORTH AMERICA

NORTH BANK RESOURCES
Garfield County, Colorado

MINING PLAN

REV	DESCRIPTION	BY	DATE
0	SUBMITTED FOR PERMIT	PBE	9/06

DRAWING FILE: FIGURE 2.dwg
TAB: FIGURE 2

DRAWN BY: PBE | PREPARED BY: PBE | DATE: 9/20/2006

FIGURE 2

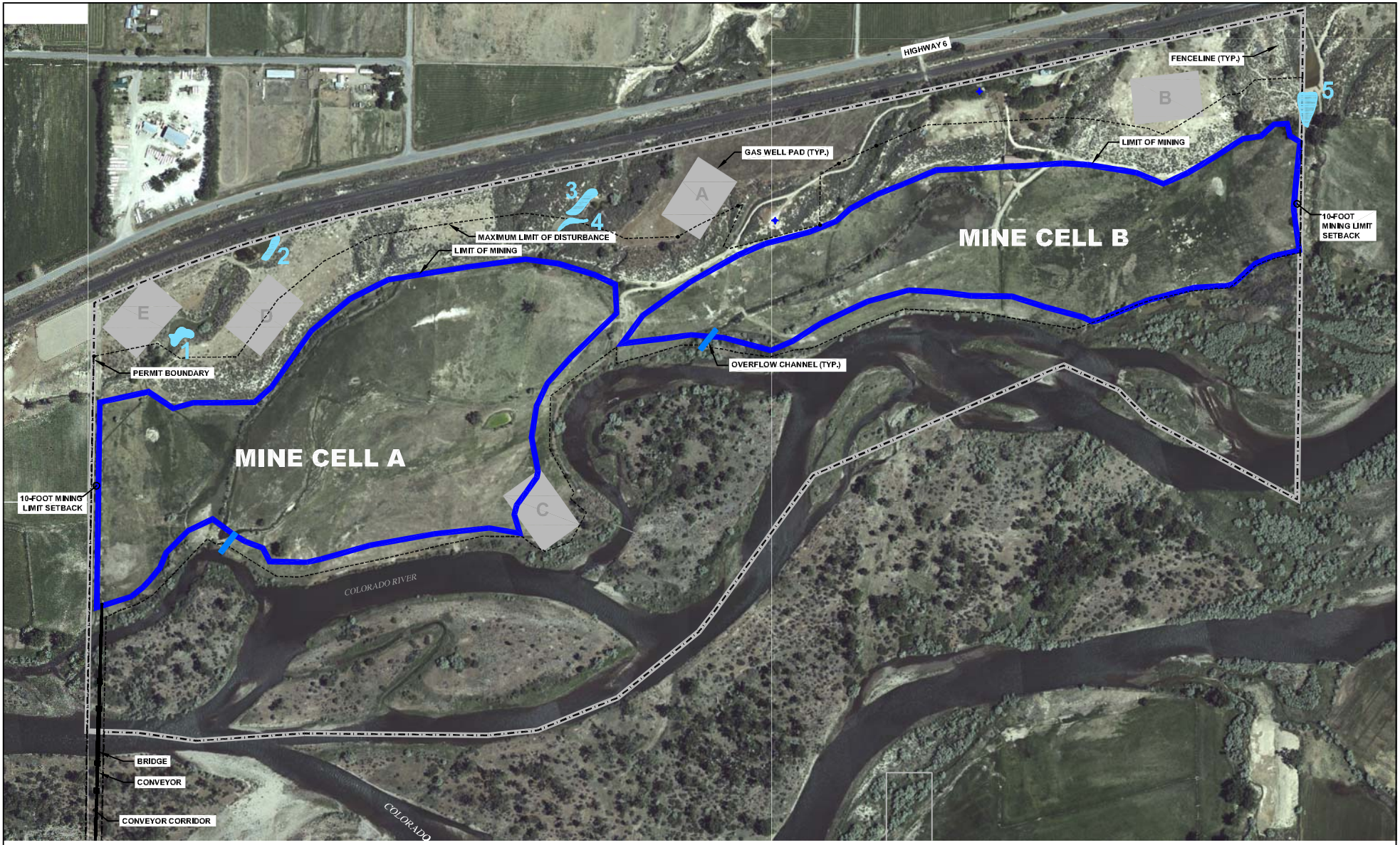

LEGEND

MAP FEATURES

- MINE PERMIT BOUNDARY
- LIMIT OF MINING - PIT CREST
- LIMIT OF DISTURBANCE
- PROPERTY BOUNDARY
- POTENTIAL MITIGATION SITE
- GAS WELL PAD

PREPARED BY:
ARCADIS
ARCADIS G&M, Inc.

NORTH

0 600 1200

Scale in Feet

PROJECTION: NAD 27, UTM ZONE 13, METER

LAFARGE NORTH AMERICA

NORTH BANK RESOURCES
Garfield County, Colorado

POTENTIAL MITIGATION SITES

REV	DESCRIPTION	BY	DATE
0	SUBMITTED FOR PERMIT	PBE	9/06

DRAWING FILE: FIGURE 3.dwg
TAB: FIGURE 3

DRAWN BY: PBE | PREPARED BY: PBE | DATE: 9/20/2006

FIGURE 3

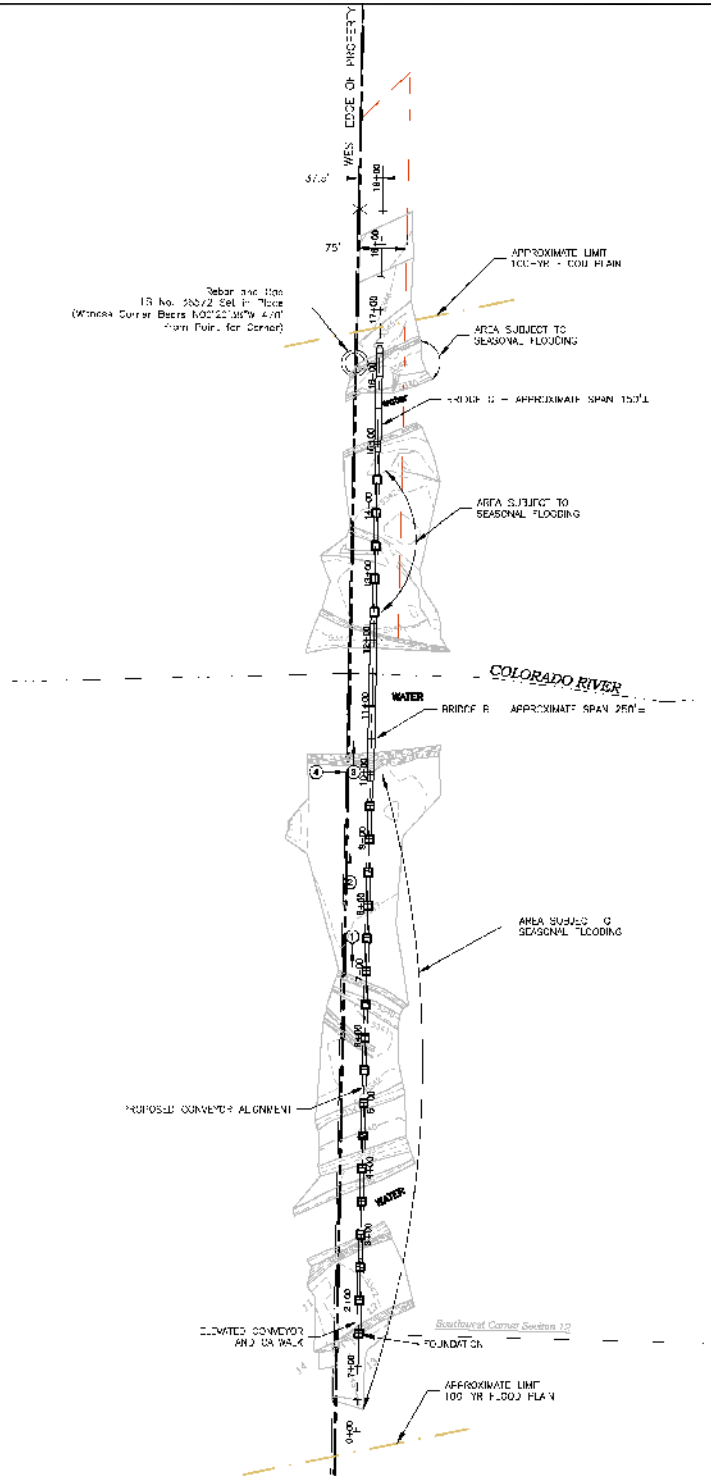

LAFARGE NORTH AMERICA

NORTH BANK RESOURCES
Garfield County, Colorado

CONVEYOR ALIGNMENT

REV	DESCRIPTION	BY	DATE
0	SUBMITTED FOR PERMIT	PBE	9/06

DRAWING FILE: FIGURE 3a-3d.dwg
TAB: FIGURE 3a

FIGURE 3a

DRAWN BY: PBE | PREPARED BY: PBE | DATE: 9/20/2006

BILL OF MATERIAL			
ITEM NO.	DRAWING/VENDOR NO.	MATERIAL/ DESCRIPTION	TOTAL REQUIRED
1	CC886-0004	36" CONVEYOR W/ 36" WALKWAY ASSEMBLY	
2	CC990-0001	C10x25 CHANNEL 6'-8"	1
3	CC990-0002	1/4"x3"x3" ANGLE 4'-1 3/8"	2
4	CC990-0003	8"DIA. SCH 40 PIPE (LENGTH VARIES)	1
5	CC990-0004	3/4"x12"x12" BASE PLATE 1 1/8" DIA. HOLES	1

QTY ARE FOR ONE SUPPORT

TYPICAL

FOR STATIONS FOR ALL OF REST NOT CALLED OUT IN DRAWING CC18-0005 AND CC18-0006 (50'-0" CENTERS)

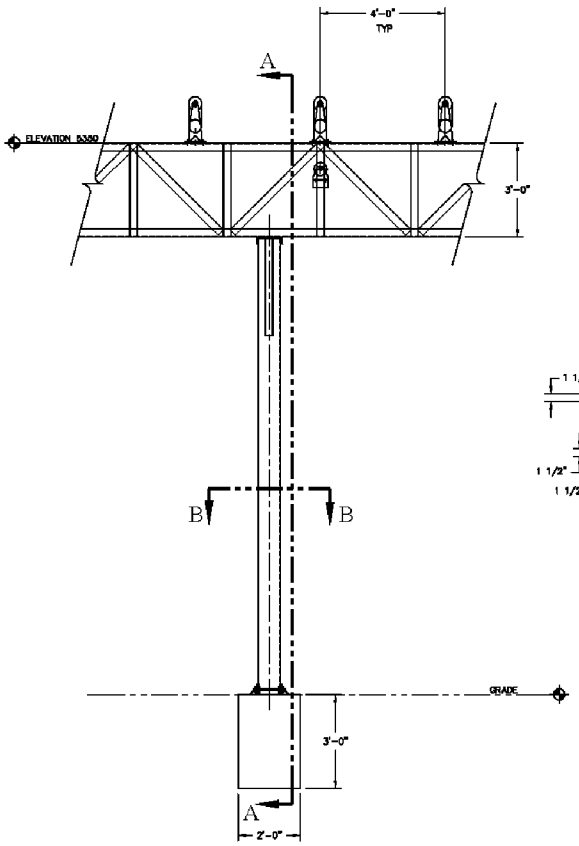

CONVEYOR SUPPORT COLUMN

NOT TO SCALE

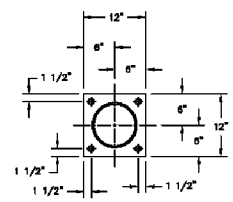

SECTION B-B

SCALE: 1"=1'-0"

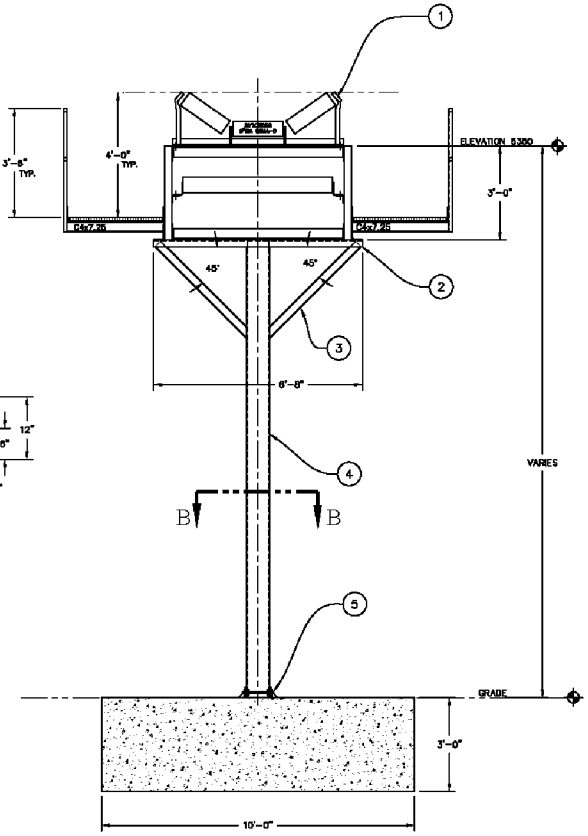

SECTION A-A

NOT TO SCALE

GARY MAGGI
820 SCR #21
BERTHOUD, CO. 80513
970-532-3814

REVISIONS:		BY:	DATE:
A	x	x	x

CADD
1202 E 19th.
SCOTTSBLUFF, NEBRASKA 69361
1-308-632-7986

DRAWN NAME: CONVEYOR SUPPORT COLUMN

CHECK BY

DRAWN BY PMB

SCALE 1/2" = 1'-0"

DATE 5-09-06

JOB NO. COLORADO RIVER BRIDGE

DRAWING NO. CC18-0004

SHEET NO. CC18-0004

LAFARGE NORTH AMERICA

NORTH BANK RESOURCES
Garfield County, Colorado

CONVEYOR DETAILS

REV	DESCRIPTION	BY	DATE
0	SUBMITTED FOR PERMIT	PBE	9/06

DRAWING FILE: FIGURE 3a-3d.dwg

TAB: FIGURE 3b

FIGURE 3b

DRAWN BY: PBE | PREPARED BY: PBE | DATE: 9/20/2006

BILL OF MATERIAL			
ITEM NO.	DRAWING/VENDOR NO.	MATERIAL/ DESCRIPTION	TOTAL REQUIRED
1	CC586-0005	36" CONVEYOR W/ 36" WALKWAY ASSEMBLY	
2	CC990-0001	C10x25 CHANNEL 6'-8"	1
3	CC990-0002	1/4"x3"x3" ANGLE 4'-1 3/8"	2
4	CC990-0003	8"DIA. SCH 40 PIPE (LENGTH VARIES)	2
5	CC990-0004	3/4"x12"x12" BASE PLATE 7/8" DIA. HOLES	2

QTY ARE FOR ONE SUPPORT

TYPICAL
FOR STATIONS 2.25, AND 4.50
(75'-0" CENTERS)

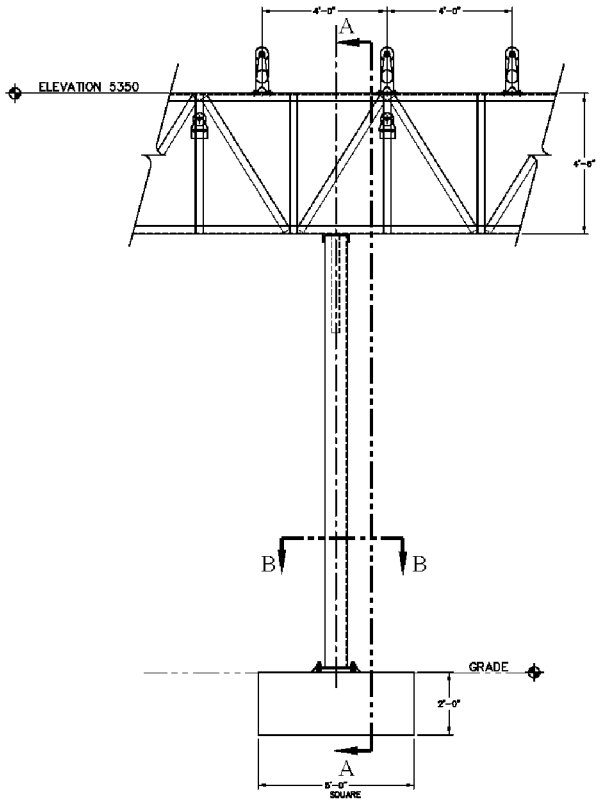

CONVEYOR SUPPORT COLUMN
NOT TO SCALE

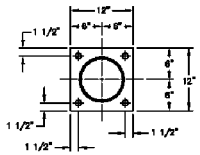

SECTION B-B
SCALE: 1"=1'-0"

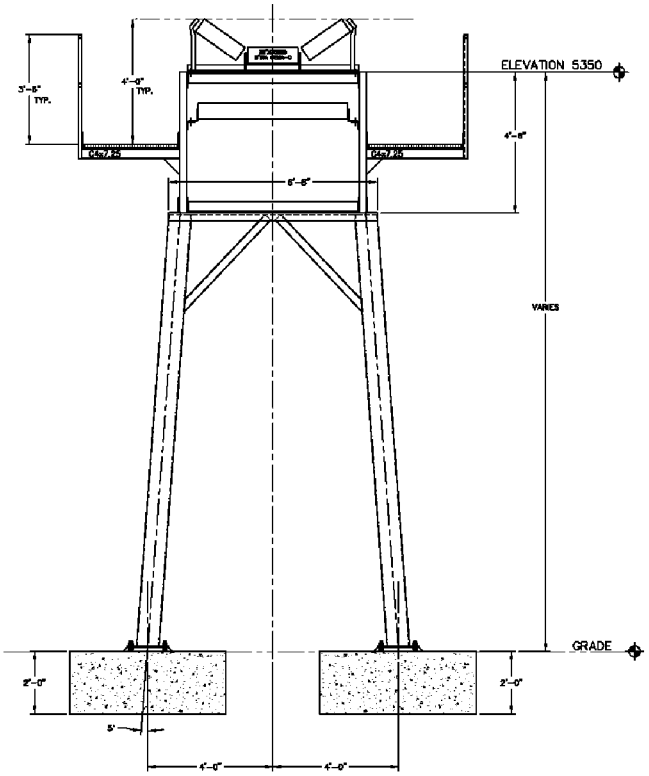

SECTION A-A
NOT TO SCALE

GARY MAGGI
820 SCR #21
BERTHOUD, CO. 80513
970-532-3814

REVISIONS		BY	DATE
A	x	x	x

CADD
1202 E 19th
SCOTTSBLUFF, NEBRASKA 69361
1-308-632-7986

DRAWN NAME: CONVEYOR SUPPORT COLUMN

CHECK BY
DRAWN BY PMB
SCALE 1/2" = 1'-0"
DATE 9-09-06
JOB NO. COLORADO RIVER BRIDGE
DRAWING NO. CC18-0005

SHEET NO.
CC18-0005

LAFARGE NORTH AMERICA

NORTH BANK RESOURCES
Garfield County, Colorado

CONVEYOR DETAILS

REV	DESCRIPTION	BY	DATE
0	SUBMITTED FOR PERMIT	PBE	9/06

DRAWN BY: PBE | PREPARED BY: PBE | DATE: 9/20/2006

DRAWING FILE: FIGURE 3a-3d.dwg
TAB: FIGURE 3c

FIGURE 3c

BILL OF MATERIAL			
ITEM NO.	DRAWING/VENDOR NO.	MATERIAL/ DESCRIPTION	TOTAL REQUIRED
1	CC886-0006	36" CONVEYOR W/ 36" WALKWAY ASSEMBLY	
2	CC990-0001	C10x25 CHANNEL 6'-8"	1
3	CC990-0002	1/4"x3"x3" ANGLE 5'-1 1/2"	2
4	CC990-0003	8"DIA. SCH 40 PIPE (LENGTH VARIES)	2
5	CC990-0004	3/4"x12"x12" BASE PLATE 7/8" DIA. HOLES	2

QTY ARE FOR ONE SUPPORT

TYPICAL
FOR STATIONS 3.00, AND 3.75
(75'-0" CENTERS)

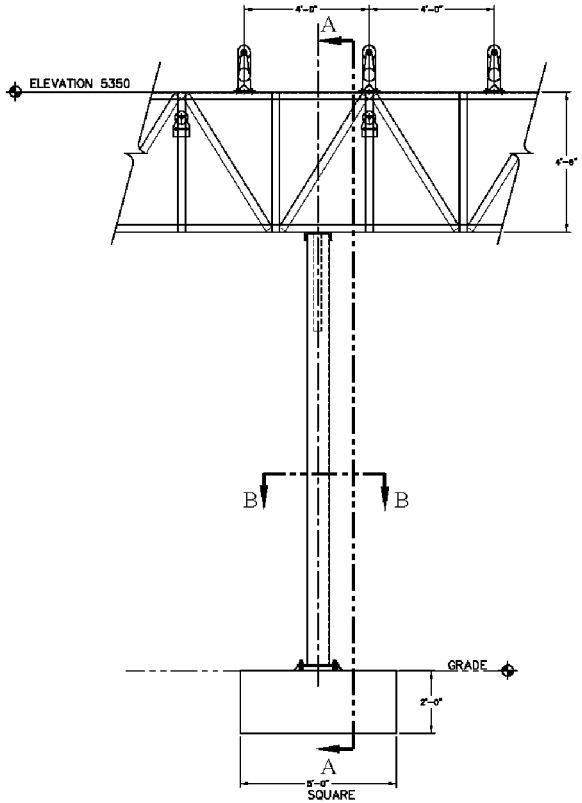

CONVEYOR SUPPORT COLUMN
NOT TO SCALE

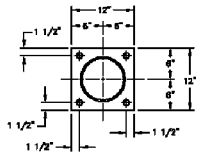

SECTION B-B
SCALE: 1"=1'-0"

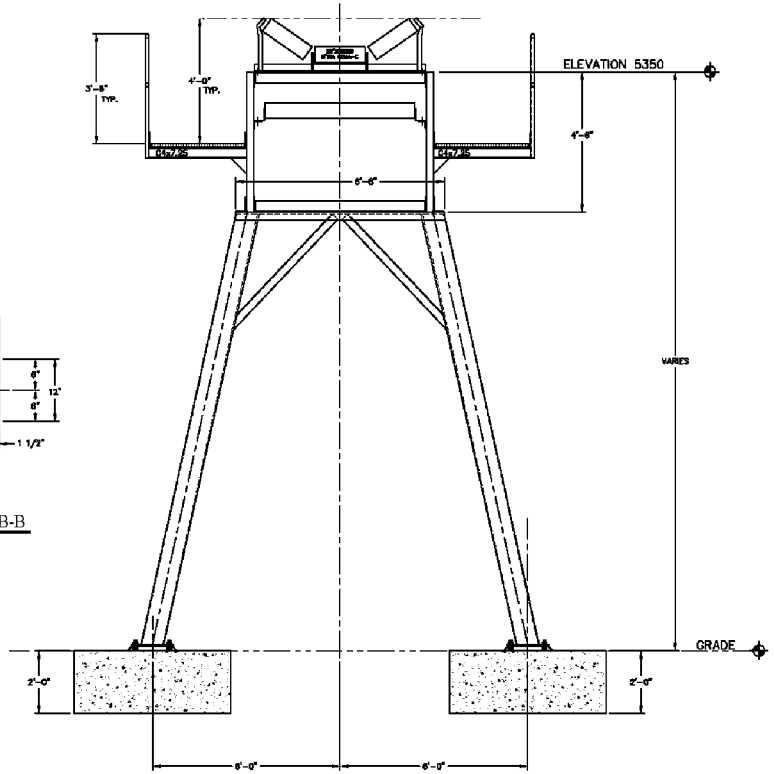

SECTION A-A
NOT TO SCALE

GARY MAGGI
820 SCR #21
BERTHOUD, CO. 80513
970-532-3814

REVISIONS		BY:	DATE:
A	x	x	x

CADD
1202 E 19th.
SCOTTSBLUFF, NEBRASKA 69361
1-308-632-7996

DRAWN NAME: CONVEYOR SUPPORT COLUMN

CHECK BY

DRAWN BY PMB

SCALE 1/2" = 1'-0"

DATE 5-09-06

JOB NO. COLORADO RIVER BRIDGE

DRAWING NO. CC18-0006

SHEET NO. CC18-0006

LAFARGE NORTH AMERICA

NORTH BANK RESOURCES
Garfield County, Colorado

CONVEYOR DETAILS

REV	DESCRIPTION	BY	DATE
0	SUBMITTED FOR PERMIT	PBE	9/06

DRAWING FILE: FIGURE 3a-3d.dwg

TAB: FIGURE 3d

FIGURE 3d

DRAWN BY: PBE | PREPARED BY: PBE | DATE: 9/20/2006

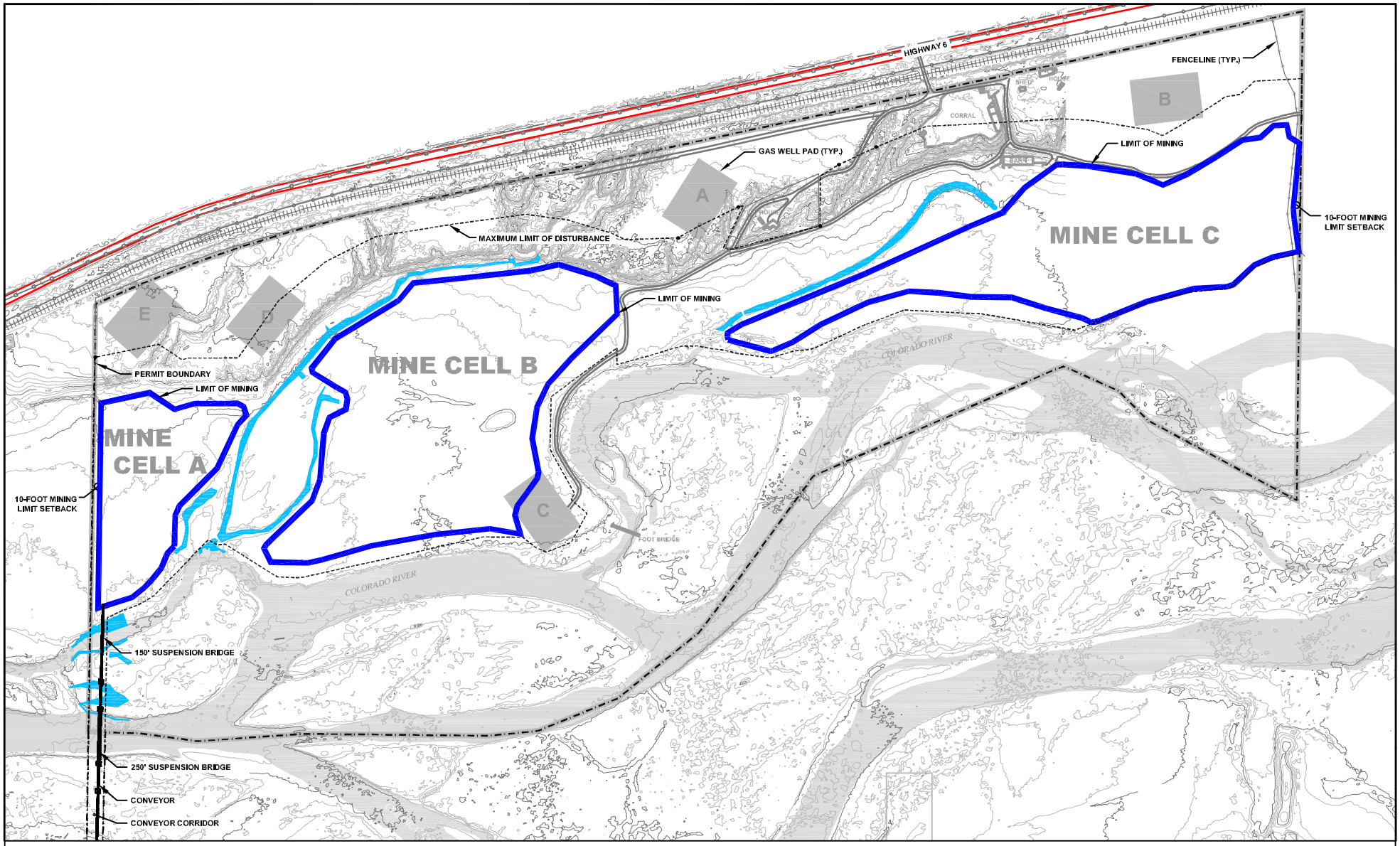

LEGEND

MAP FEATURES

- MINE PERMIT BOUNDARY
- LIMIT OF MINING - PIT CREST
- LIMIT OF DISTURBANCE
- PROPERTY BOUNDARY
- EXISTING MAJOR CONTOUR LINE (10' INTERVAL)
- EXISTING MINOR CONTOUR LINE (5' INTERVAL)
- RAILROAD
- HIGHWAY
- EXISTING ROAD
- FENCE
- POWER LINE
- QWEST FIBER OPTIC CABLE
- MCI FIBER OPTIC CABLE
- GAS WELL PAD
- STRUCTURE
- JURISDICTIONAL WETLANDS

PREPARED BY:
ARCADIS
ARCADIS G&M, Inc.

NORTH

0 600 1200

Scale in Feet

PROJECTION: NAD 27, UTM ZONE 13, METER

LAFARGE NORTH AMERICA

NORTH BANK RESOURCES
Garfield County, Colorado

ALTERNATE MINING PLAN

REV	DESCRIPTION	BY	DATE
0	SUBMITTED FOR PERMIT	PBE	9/06

DRAWING FILE: FIGURE 4.dwg
TAB: FIGURE 4

DRAWN BY: PBE | PREPARED BY: PBE | DATE: 9/20/2006

FIGURE 4

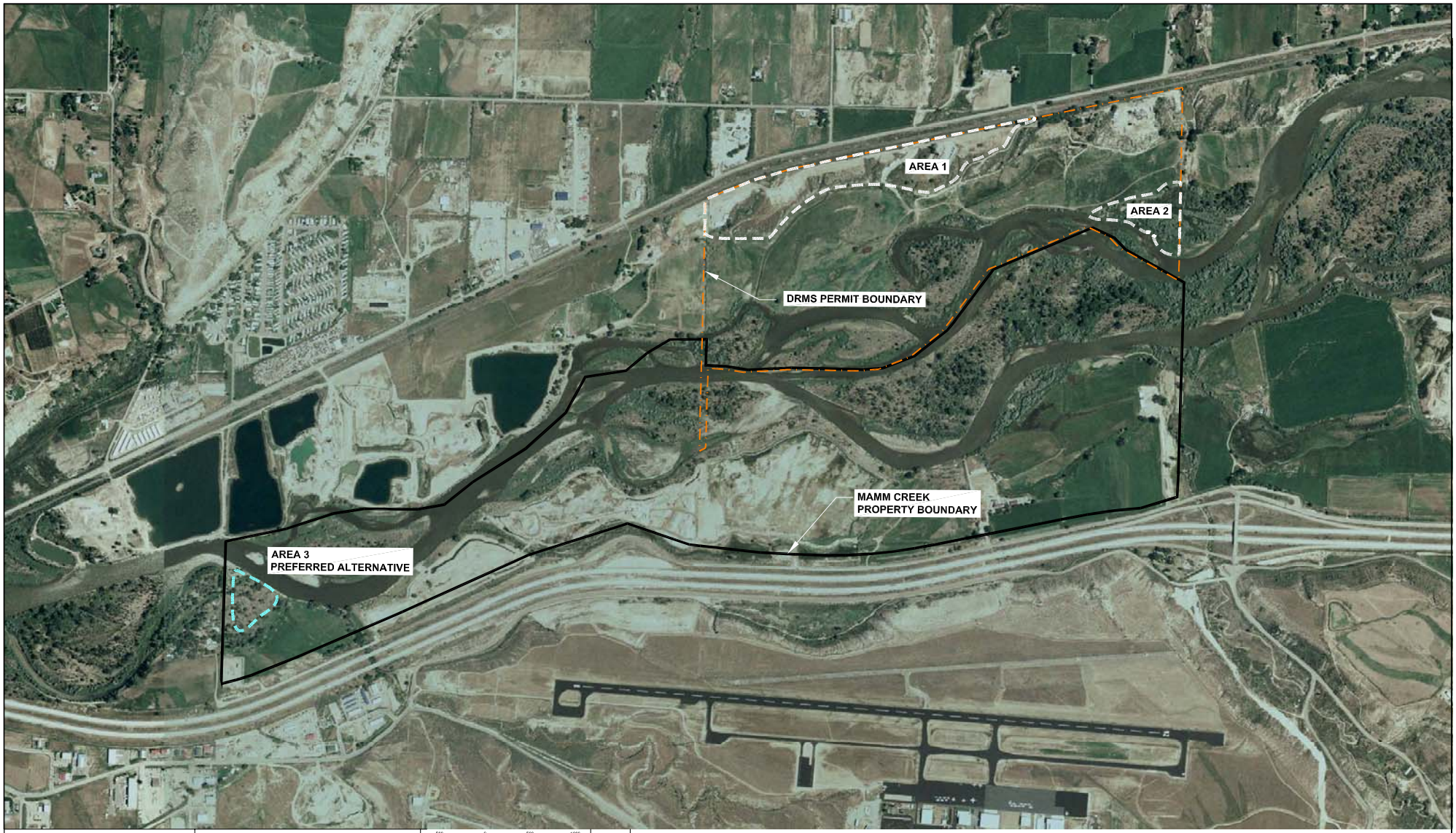

IN CHARGE OF:

DESIGNED: PBE | DRAWN: PBE | CHECKED: PA

500 0 500 1000

SCALE: 1"=1000'

NORTH

FILE: I:\1155 North Bank\ACAD\CO001155 - MITIGATION SITE ALTERNATIVES.dwg

NO.	DATE	REVISIONS	INIT
0	1/5/07	ISSUED FOR REVIEW	PBE

IT IS A VIOLATION OF LAW FOR ANY PERSON UNLESS THEY ARE ACTING UNDER THE DIRECTION OF A LICENSED PROFESSIONAL ENGINEER TO ALTER THIS DOCUMENT, UNLESS EXPLICITLY AGREED TO BY THE ENGINEER IN WRITING. THE ENGINEER DISCLAIMS ALL LIABILITY ASSOCIATED WITH THE REUSE, ALTERATION OR MODIFICATION OF THE CONTENTS HEREIN.

PREPARED FOR:

LAFARGE NORTH AMERICA

PREPARED BY:

ARCADIS
ARCADIS G&M, Inc.
630 Plaza Drive, Suite 100
Highlands Ranch, Colorado 80129
Office (720) 344-3500
Fax (720) 344-3535

LAFARGE NORTH AMERICA
NORTH BANK PIT, RIFLE COLORADO

MITIGATION SITE ALTERNATIVES

LOCATION: SECTION 11, T6S, R92W

DATE: January 5, 2007

PROJECT NO. CO001155.0000.0004

1