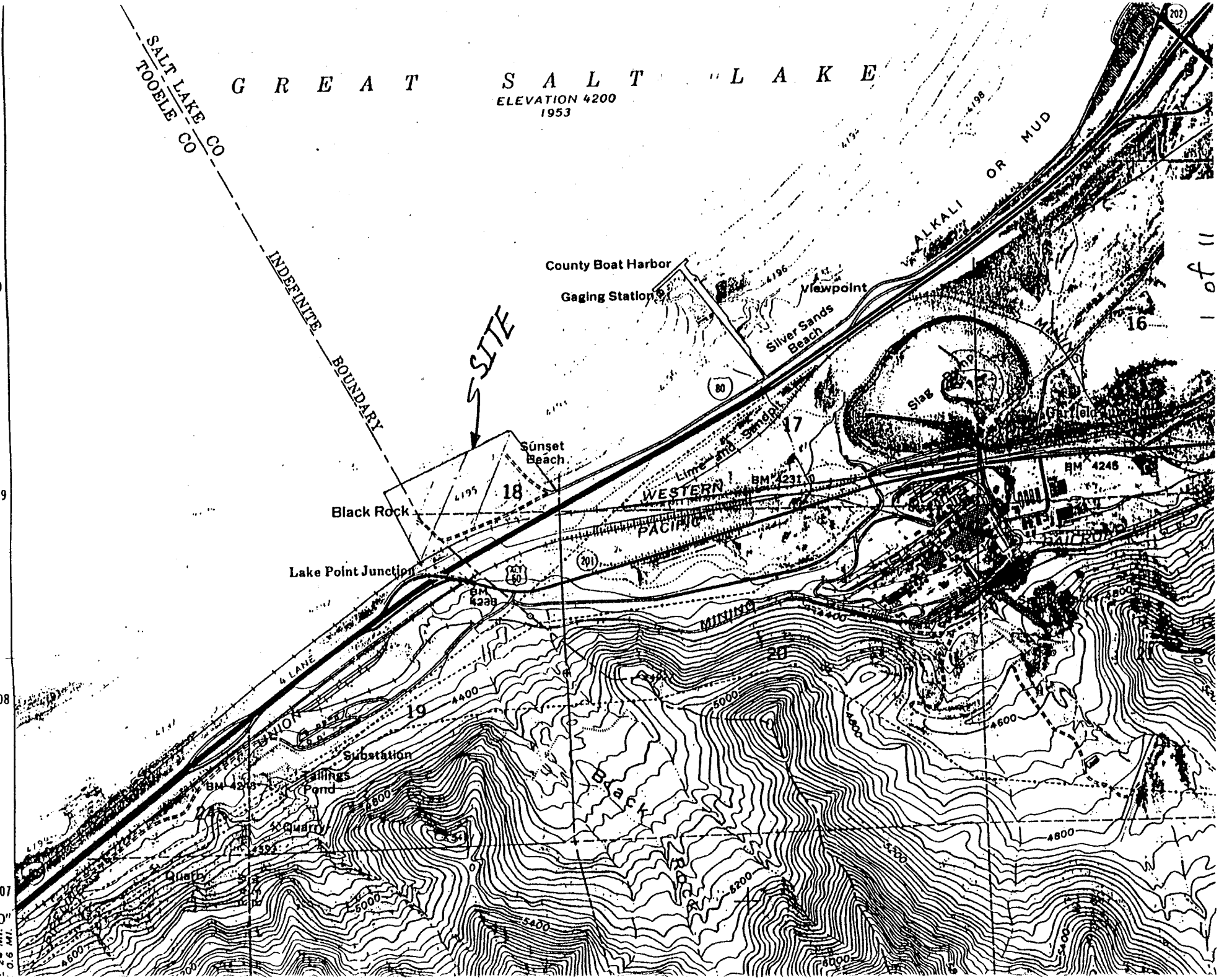

GREAT SALT LAKE
ELEVATION 4200
1953
SALT LAKE CO
TOOELE CO
INDEFINITE BOUNDARY
SITE
County Boat Harbor
Gaging Station
Viewpoint
Silver Sands Beach
ALKALI OR MUD
Sunset Beach
Black Rock
Lake Point Junction
WESTERN PACIFIC
Lime and Sandpit
Slag Pump
Garfield Junction
MINING
UNION
4 LANE
Substation
Tailings Pond
Quarry
Black Rock
BM 4231
BM 4245
BM 4238
16
17
18
19
20
4400
4600
4800
5000
5200
5400
4511000m N
4510
4509
4508
4507
42'30"

ENGINEERING PLANNING GROUP
949 East 12400 South • Draper, UT 84020 • (801)-572-2200

OWNER	BY D.S.S	DATE
KEITH TILLEY - G.S.L. HARBORS	CK. BY	4-26-96
PROJECT NO. / DESCRIPTION		SHEET 1 OF
95153 / BLACK ROCK MARINA		

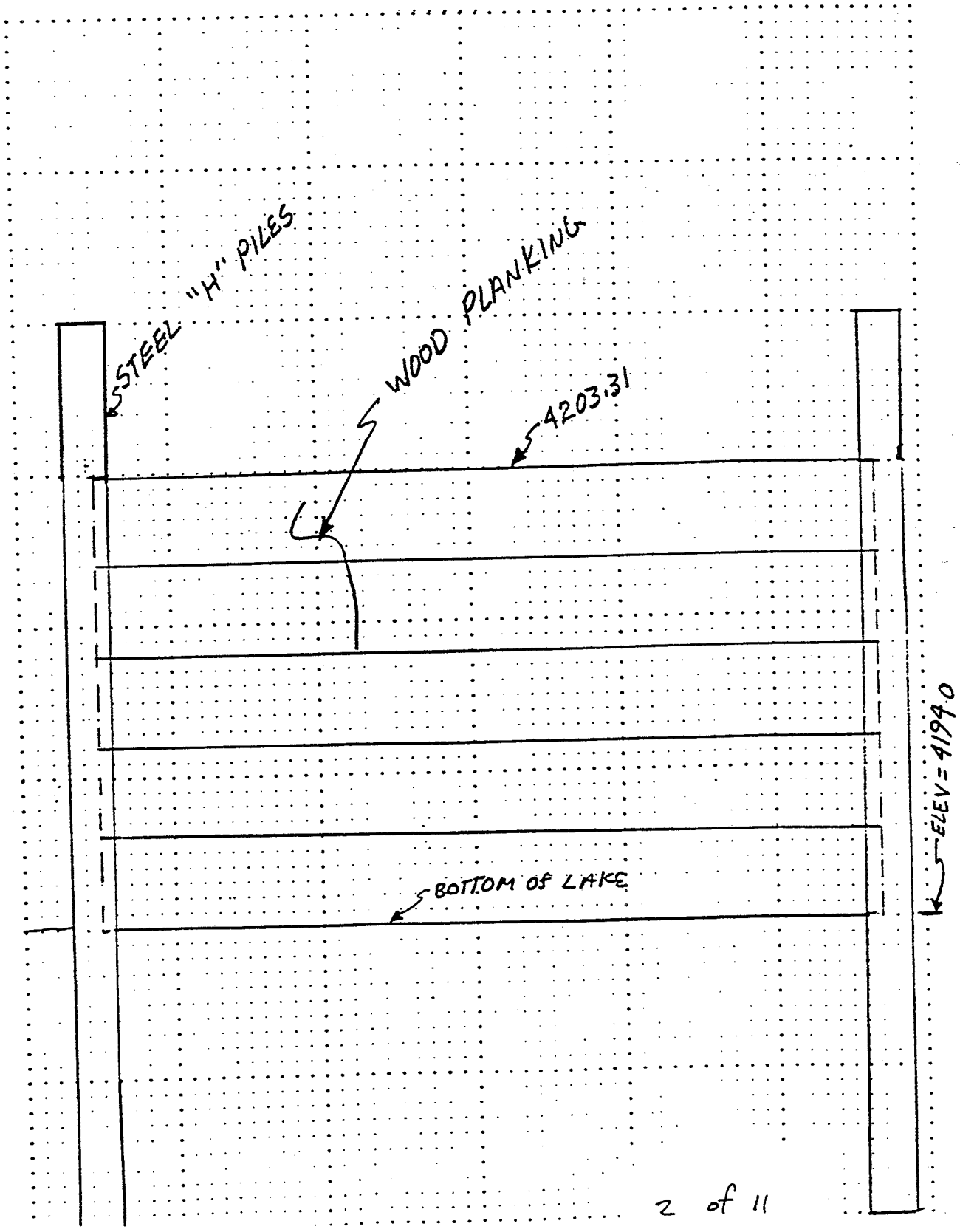

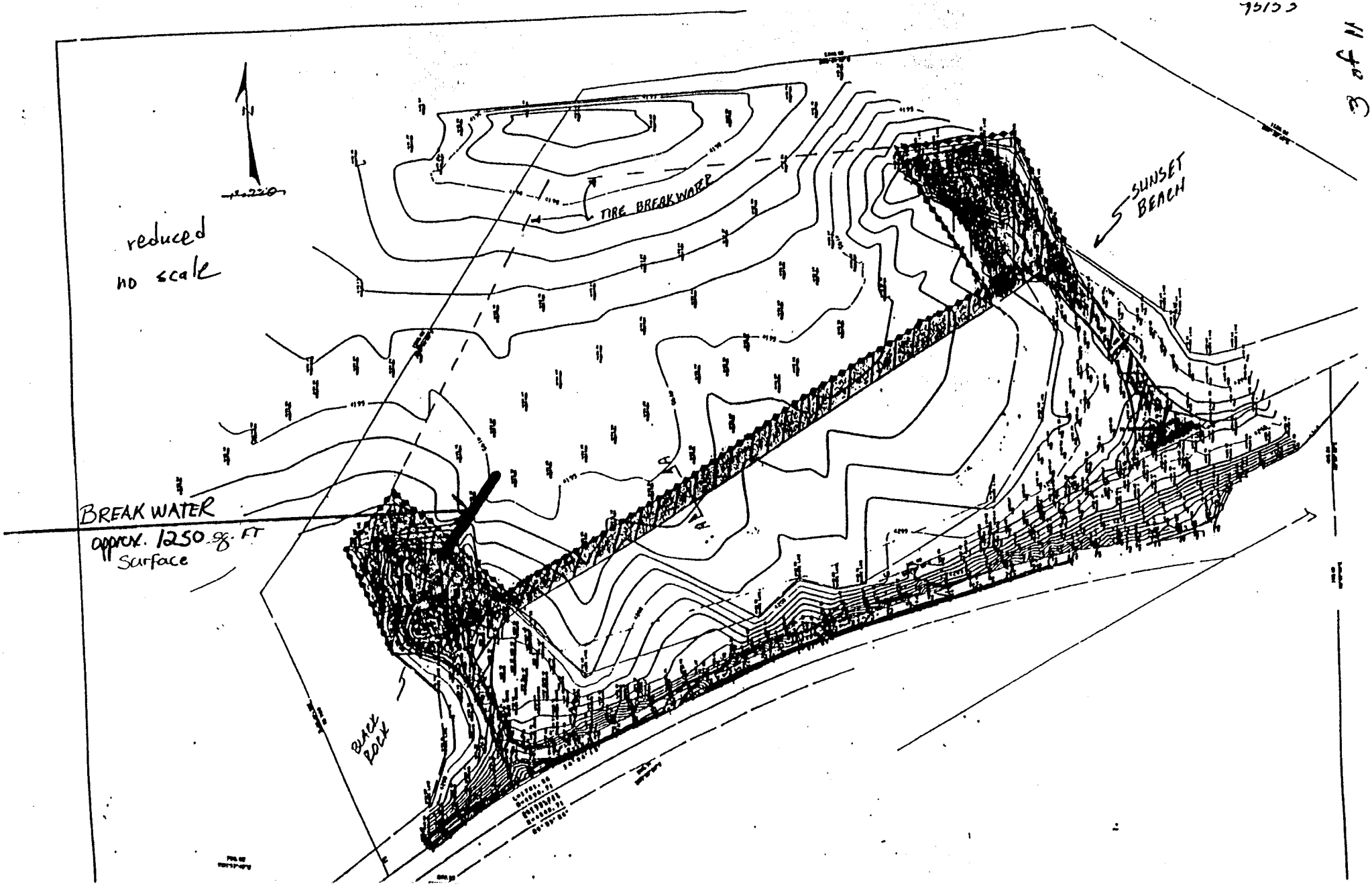
reduced
no scale
TIRE BREAKWATER
SUNSET BEACH
BREAK WATER
approx. 1250 sq. FT
Surface
BLACK ROCK

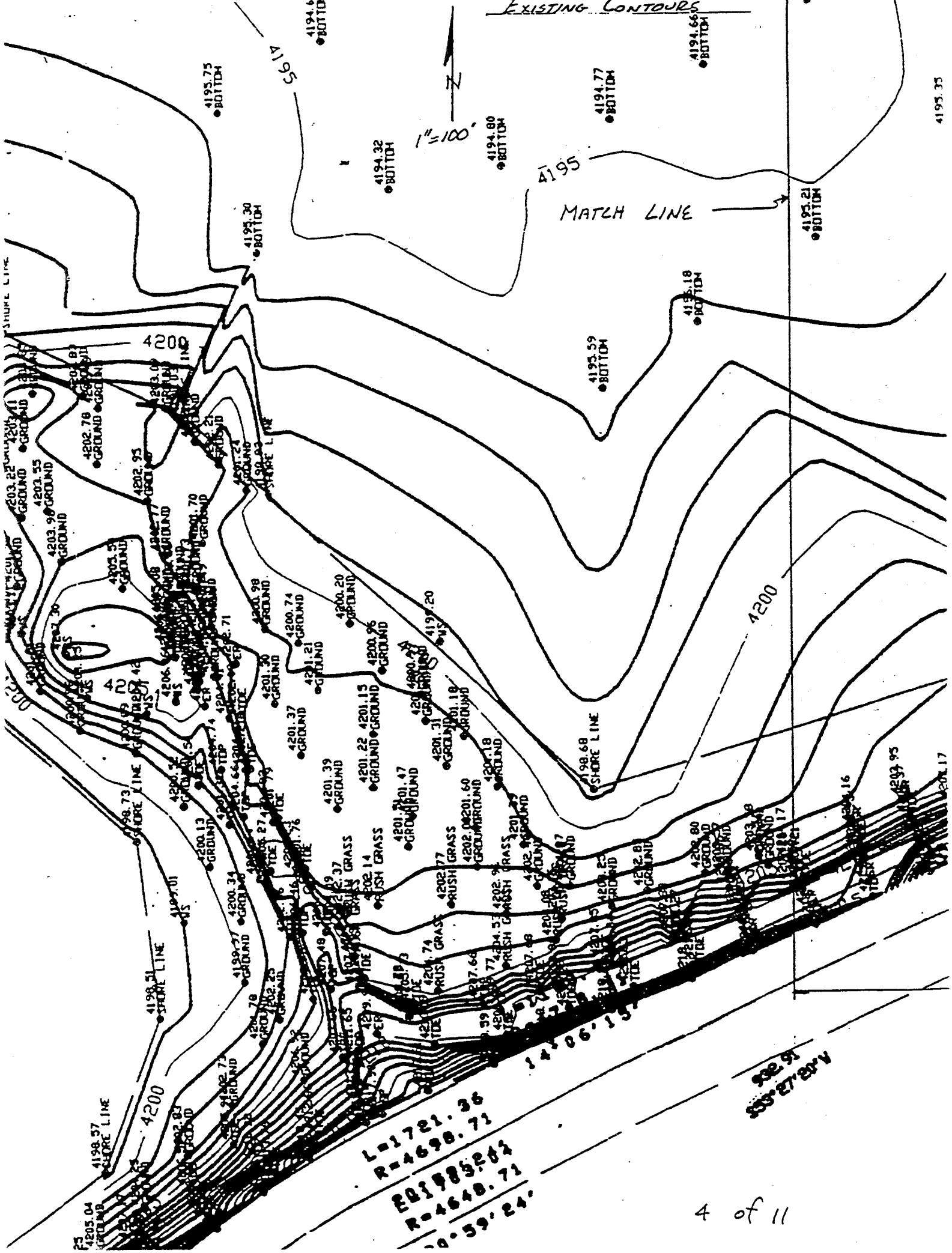
EXISTING CONTOURS
N
1"=100'
MATCH LINE
4195
4200
4195.75 BOTTOM
4194.32 BOTTOM
4194.80 BOTTOM
4194.77 BOTTOM
4194.66 BOTTOM
4195.30 BOTTOM
4195.21 BOTTOM
4195.59 BOTTOM
4198.68 SHORE LINE
4198.51 SHORE LINE
4198.57 SHORE LINE
4198.73 SHORE LINE
4202.78 GROUND
4202.95 GROUND
4203.22 GROUND
4203.55 GROUND
4203.98 GROUND
4200.74 GROUND
4200.20 GROUND
4200.96 GROUND
4201.37 GROUND
4201.39 GROUND
4201.22 GROUND
4201.15 GROUND
4201.47 GROUND
4202.14 RUSH GRASS
4202.77 RUSH GRASS
4202.96 RUSH GRASS
4202.80 GROUND
4202.83 GROUND
4205.04 GROUND
L=1721.36
R=4698.71
R=4648.71
14°06'15"

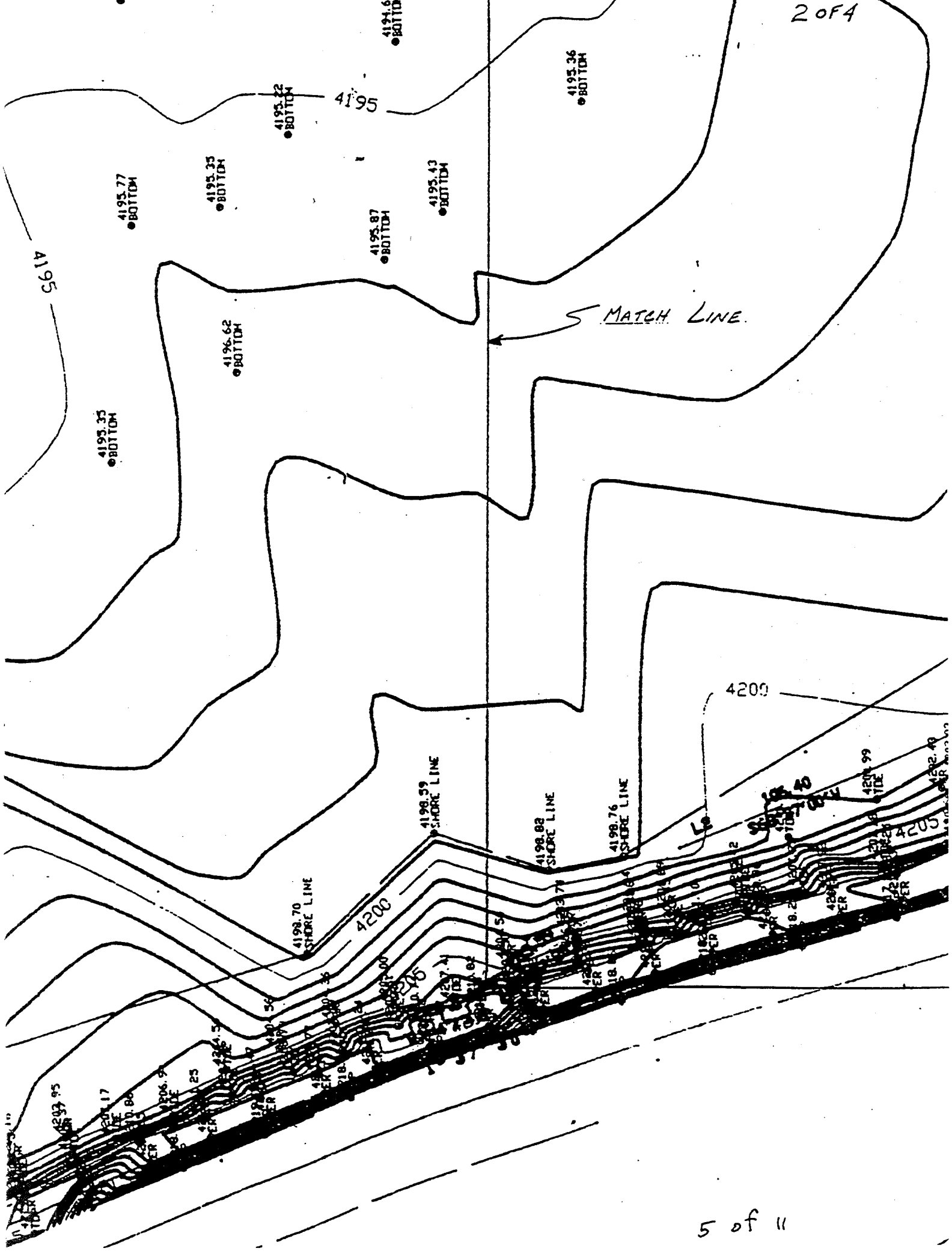
4195
4195
4195.22 BOTTOM
4195.36 BOTTOM
4195.77 BOTTOM
4195.35 BOTTOM
4195.43 BOTTOM
4195.87 BOTTOM
4196.62 BOTTOM
4195.35 BOTTOM
MATCH LINE
4200
4200
4205
4205
4198.59 SHORE LINE
4198.82 SHORE LINE
4198.76 SHORE LINE
4198.70 SHORE LINE

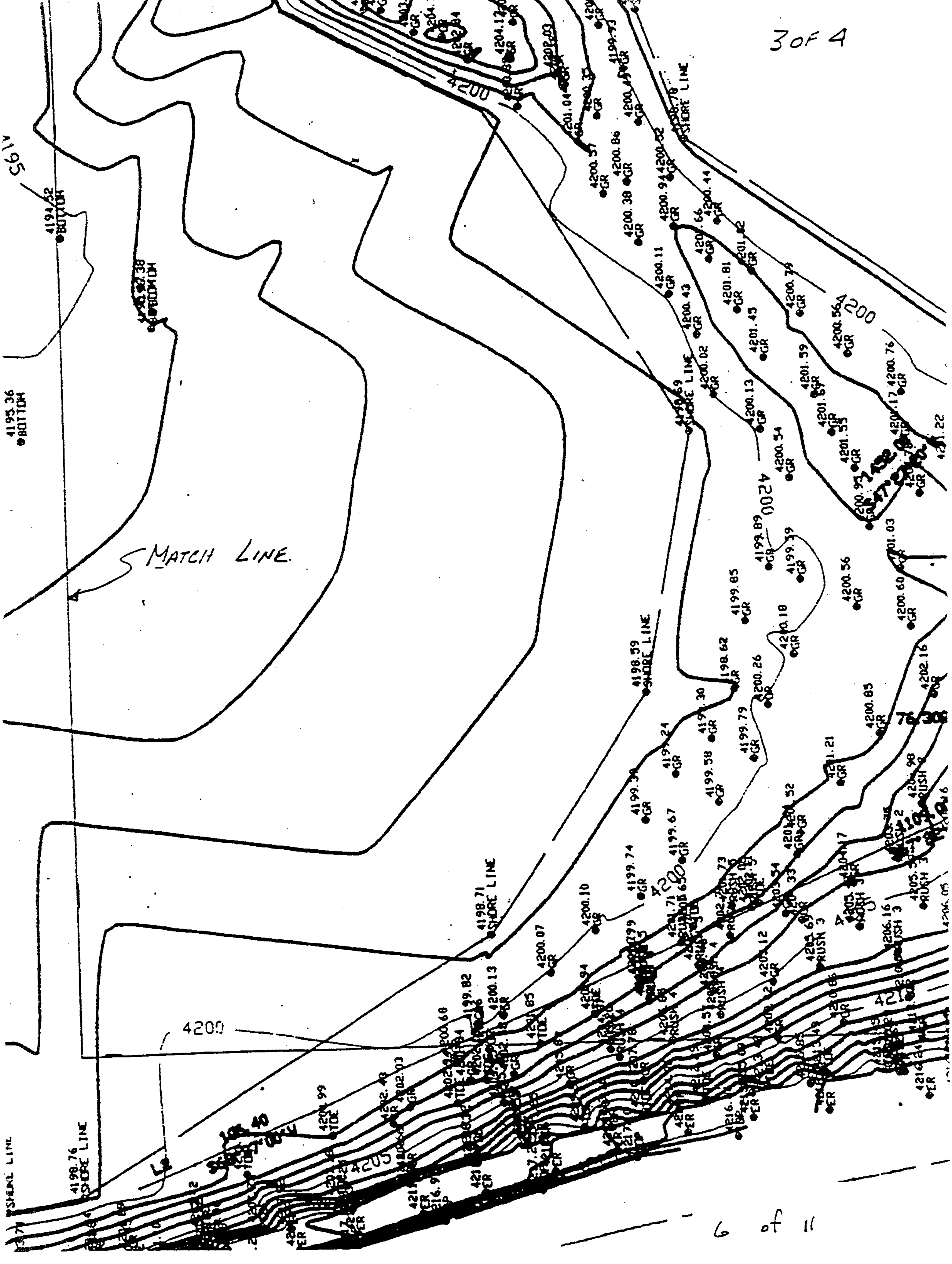
MATCH LINE
SHORE LINE
4200
4205

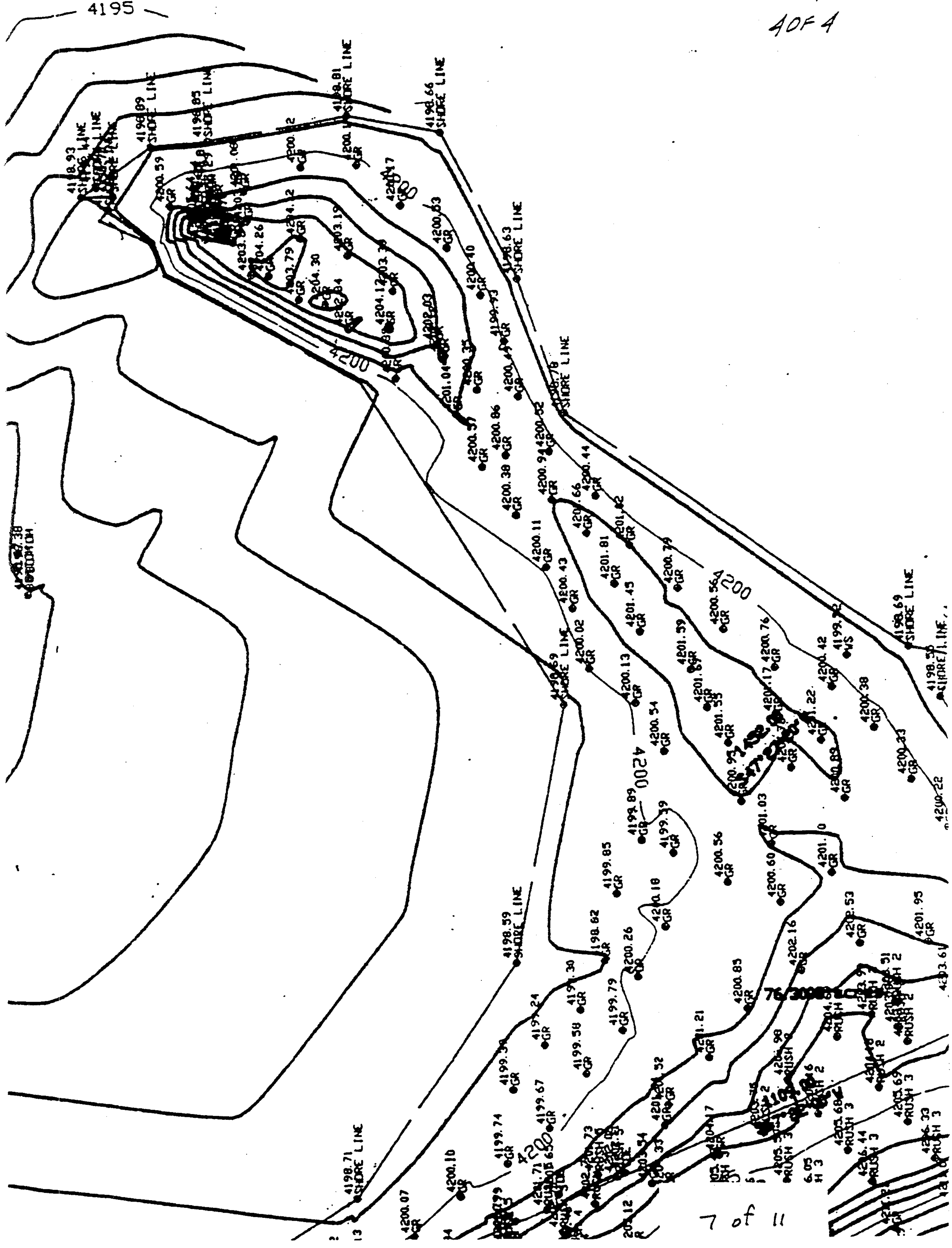
4195
4200
SHORE LINE
GR

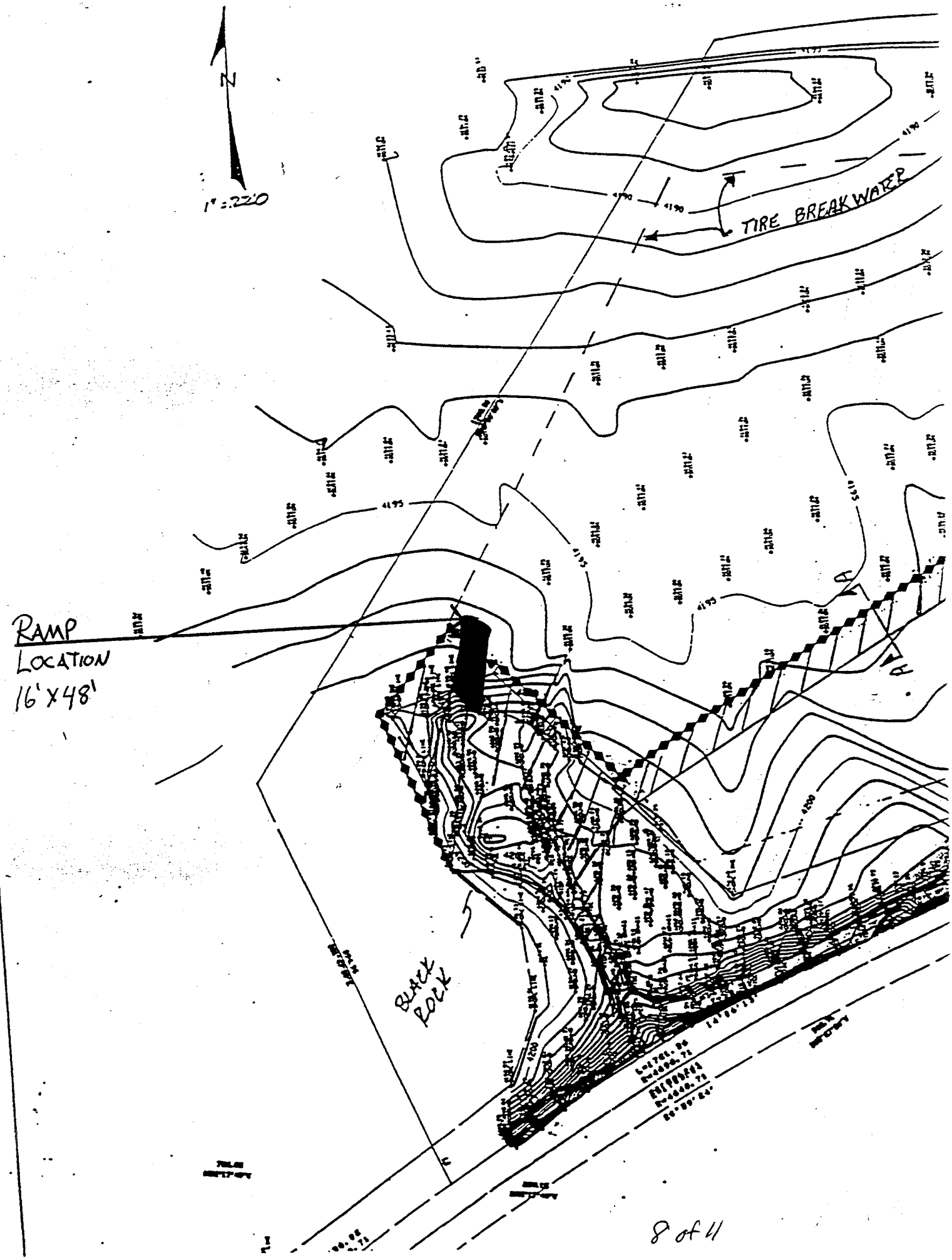
N
1" = 220'
TIRE BREAKWATER
RAMP
LOCATION
16' X 48'
BLACK ROCK
A
A

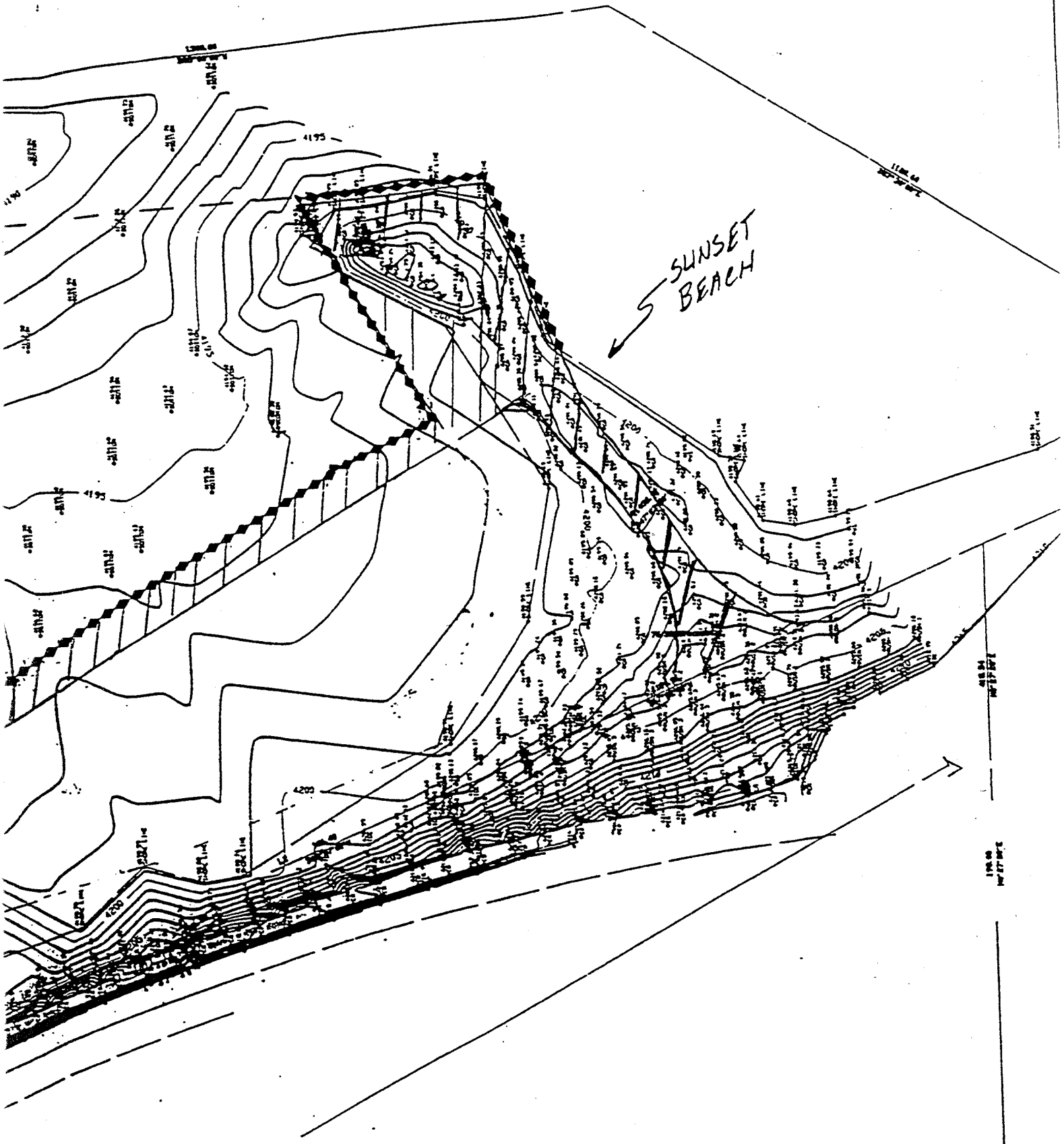
SUNSET BEACH
4195
4200

ENGINEERING · PLANNING GROUP
949 East 12400 South • Draper, UT 84020 • (801)-572-2200

OWNER	BY DSS	DATE
GREAT SALT LAKE HARBORS	CK. BY	JULY 15 1996
PROJECT NO. 95153	DESCRIPTION X-SECTION A	SHEET OF

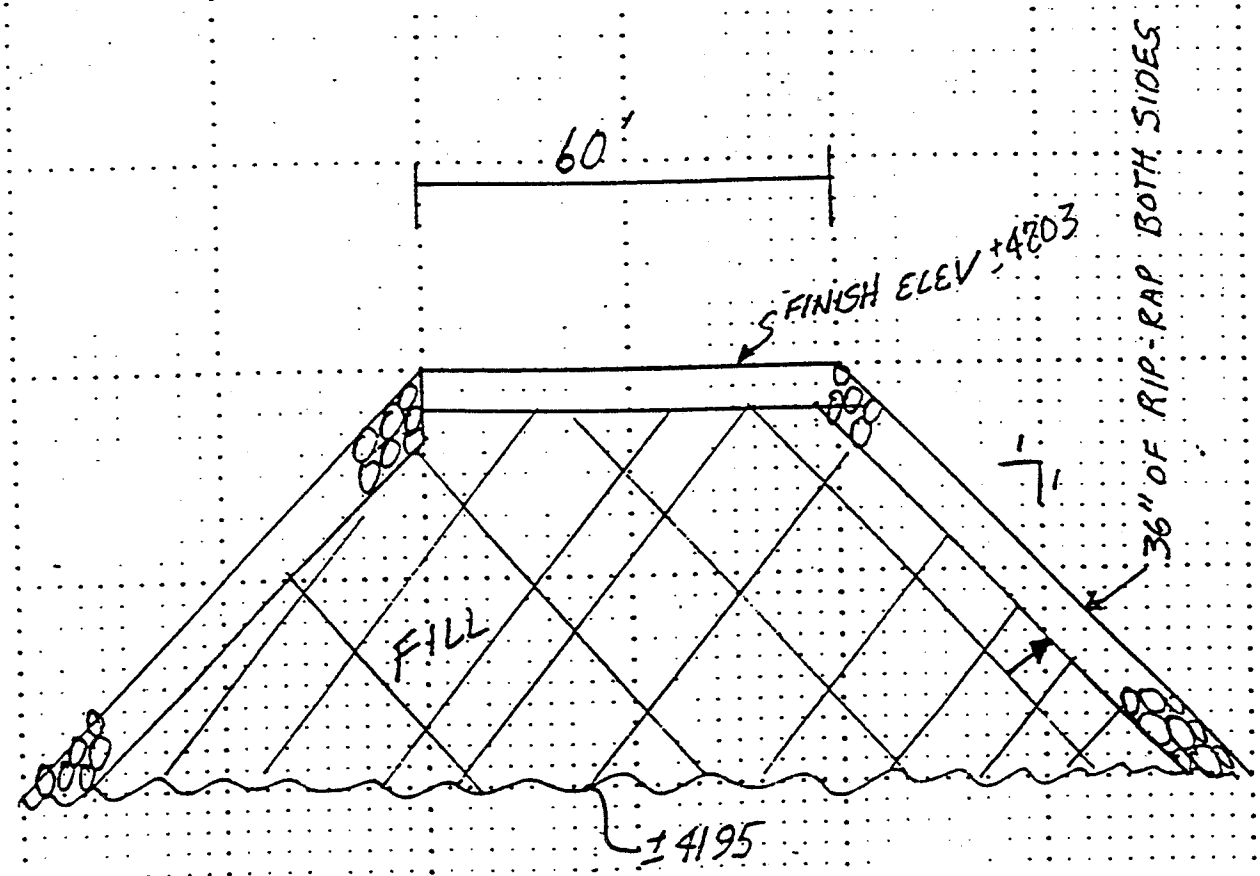

LENGTH = ± 1390 FEET

TOTAL cu. yds = ± 28,000

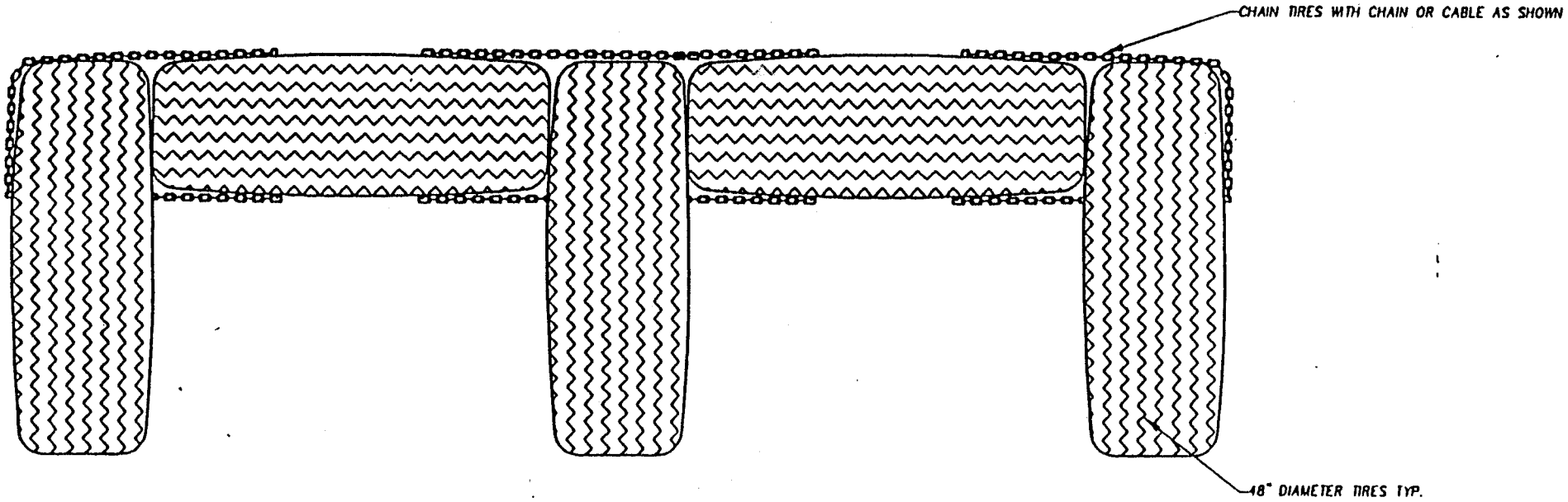

BREAKWATER

ENGINEERING PLANNING GROUP, L.C.

SALT LAKE MARINE