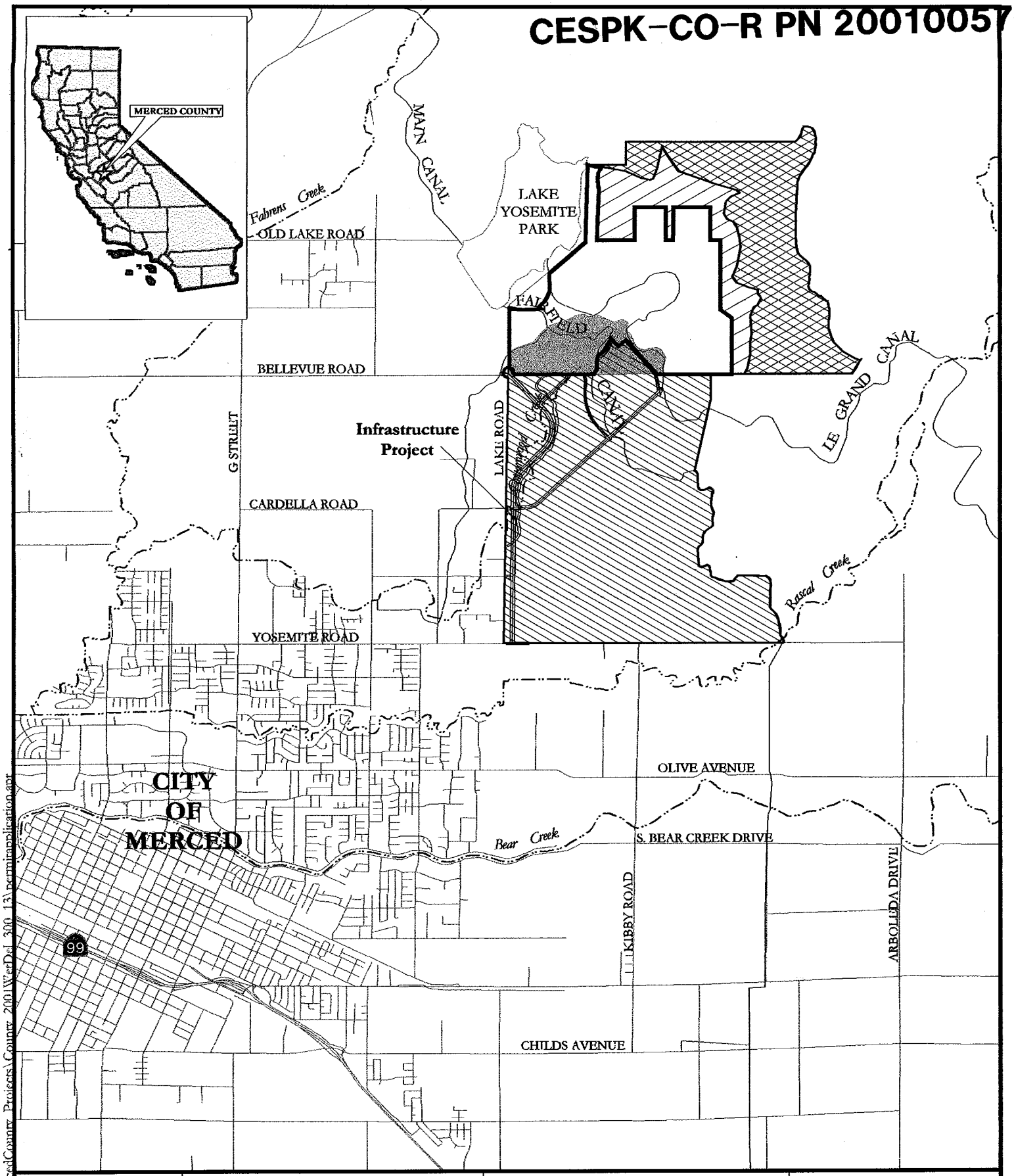

EIP ASSOCIATES

0 5,000 Feet

N

Source: Merced County, Planning & Community Dev. Dept., Creeks, Canals, Roads, Golf Course, June 1999; EIP Associates, Campus and Community Boundaries, and GIS Program, December 2001.

- UC Merced Main Campus
- University Community Plan Area
- Campus Land Reserve
- Campus Natural Reserve
- Merced Hills Golf Course

FIGURE 1
REGIONAL LOCATION

County of Merced Infrastructure Project in Support of UC Merced
Merced County, CA

C:\GISProjects_10\MercedCounty_Projects\County_2001\ErDel_300_13\permitapplication.apr

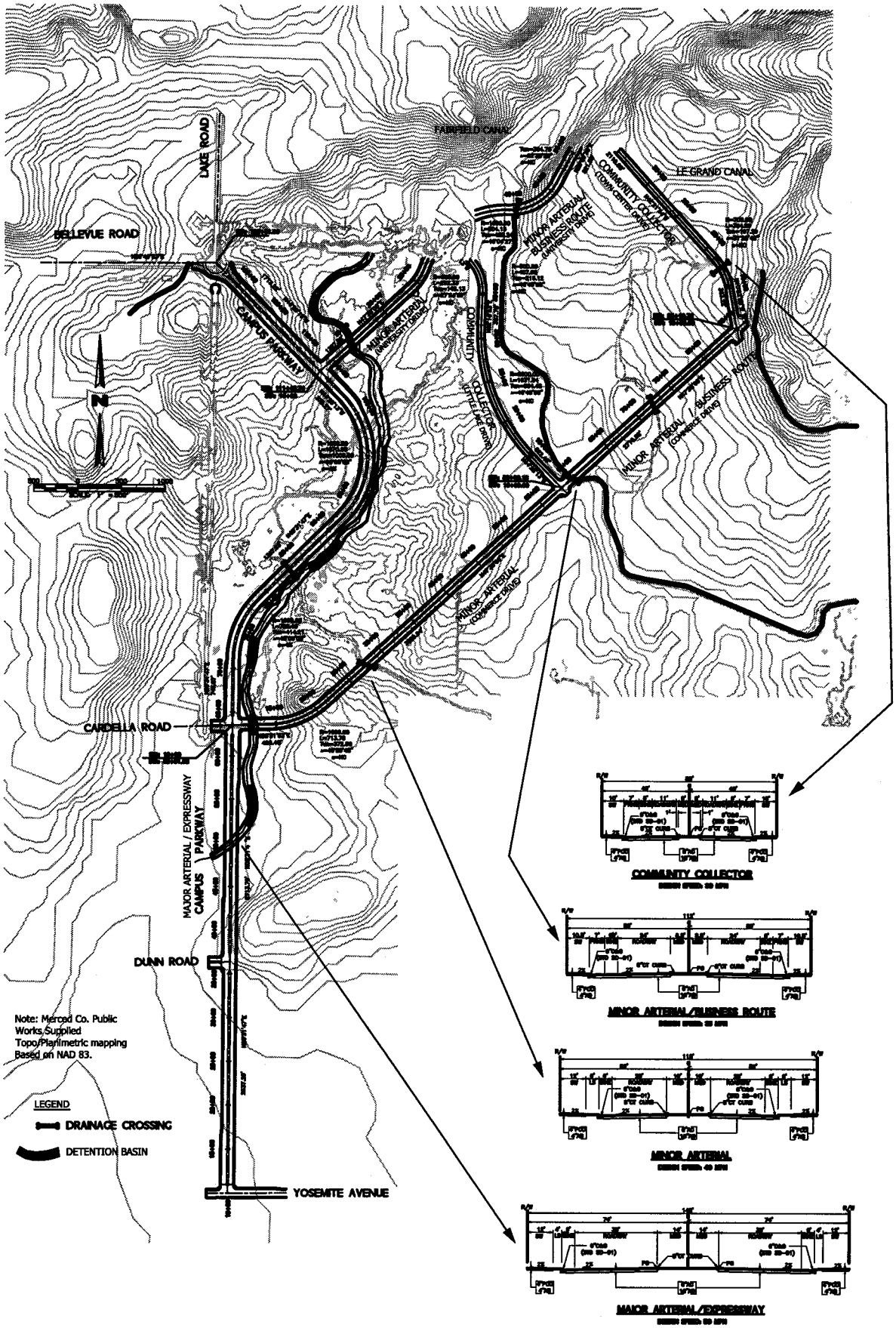

SOURCE: Nolte Associates
January 2002.

EIP ASSOCIATES

FIGURE 2
PLAN VIEW

County of Merced Infrastructure Project in Support of UC Merced Merced County, CA

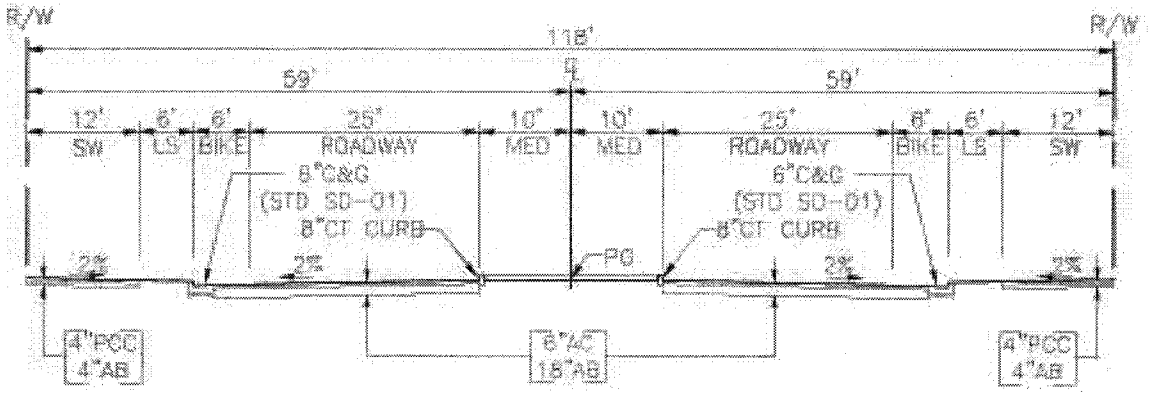

MINOR ARTERIAL

DESIGN SPEED: 40 MPH

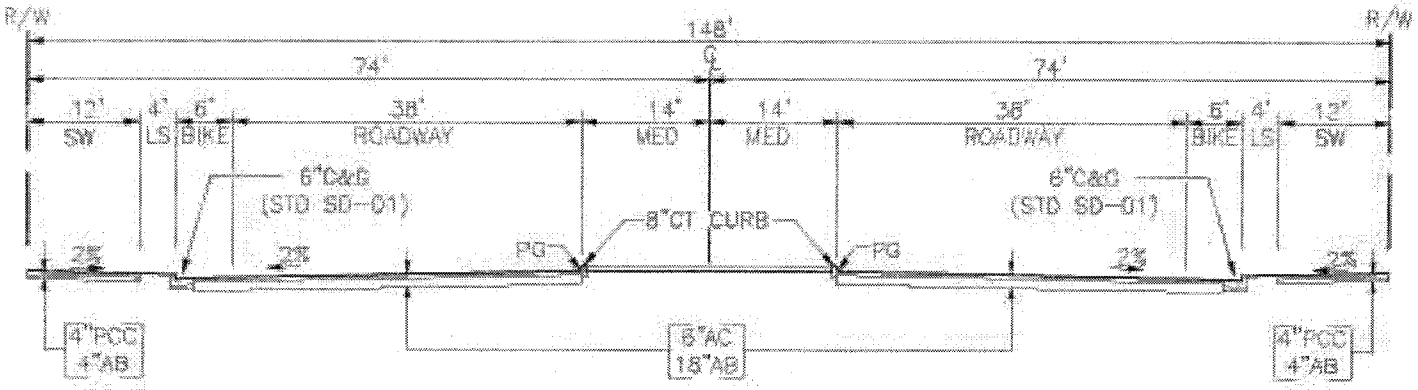

MAJOR ARTERIAL/EXPRESSWAY

DESIGN SPEED: 50 MPH

EIP ASSOCIATES

Source: Nolte, Cross Section, Novermber, 16, 2001; and EIP Associates, GIS Program, January 2002.

FIGURE 3
ROADWAY CROSS-SECTION

County of Merced Infrastructure Project in Support of UC Merced
Merced County, CA

C:\GIS\Projects 10\Merced\County Projects\County 2001 WetDel 300 13\permitapplication.apr

CESPK-CO-R PN 200100570

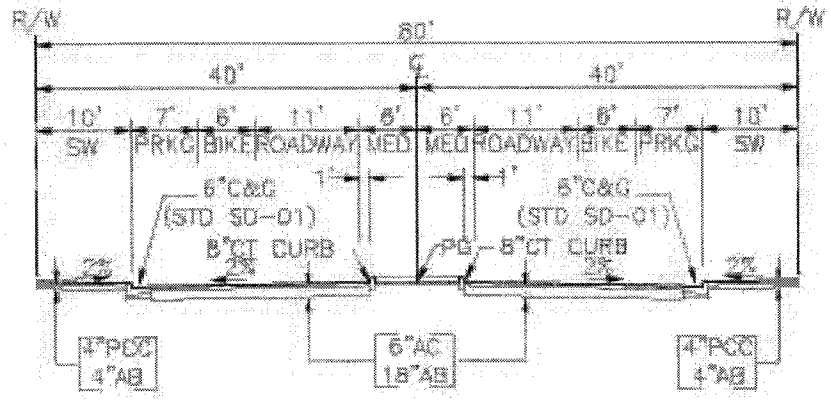

COMMUNITY COLLECTOR

DESIGN SPEED: 30 MPH

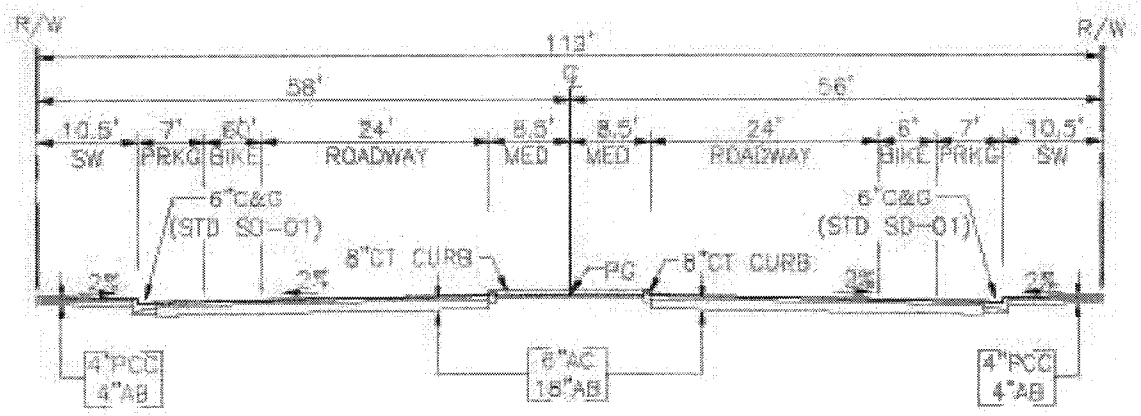

MINOR ARTERIAL/BUSINESS ROUTE

DESIGN SPEED: 35 MPH

EIP ASSOCIATES

Source: Nolte, Cross Section, Novermber, 16, 2001; and EIP Associates, GIS Program, January 2002.

FIGURE 4
ROADWAY CROSS-SECTION

County of Merced Infrastructure Project in Support of UC Merced
Merced County, CA

G:\GISProjects 16\MercedCounty Projects\County 2001 WetDel 300 13\permitapplication.apr

CESPK-CO-R PN 200100570

CESPK-CO-R PN 200100570

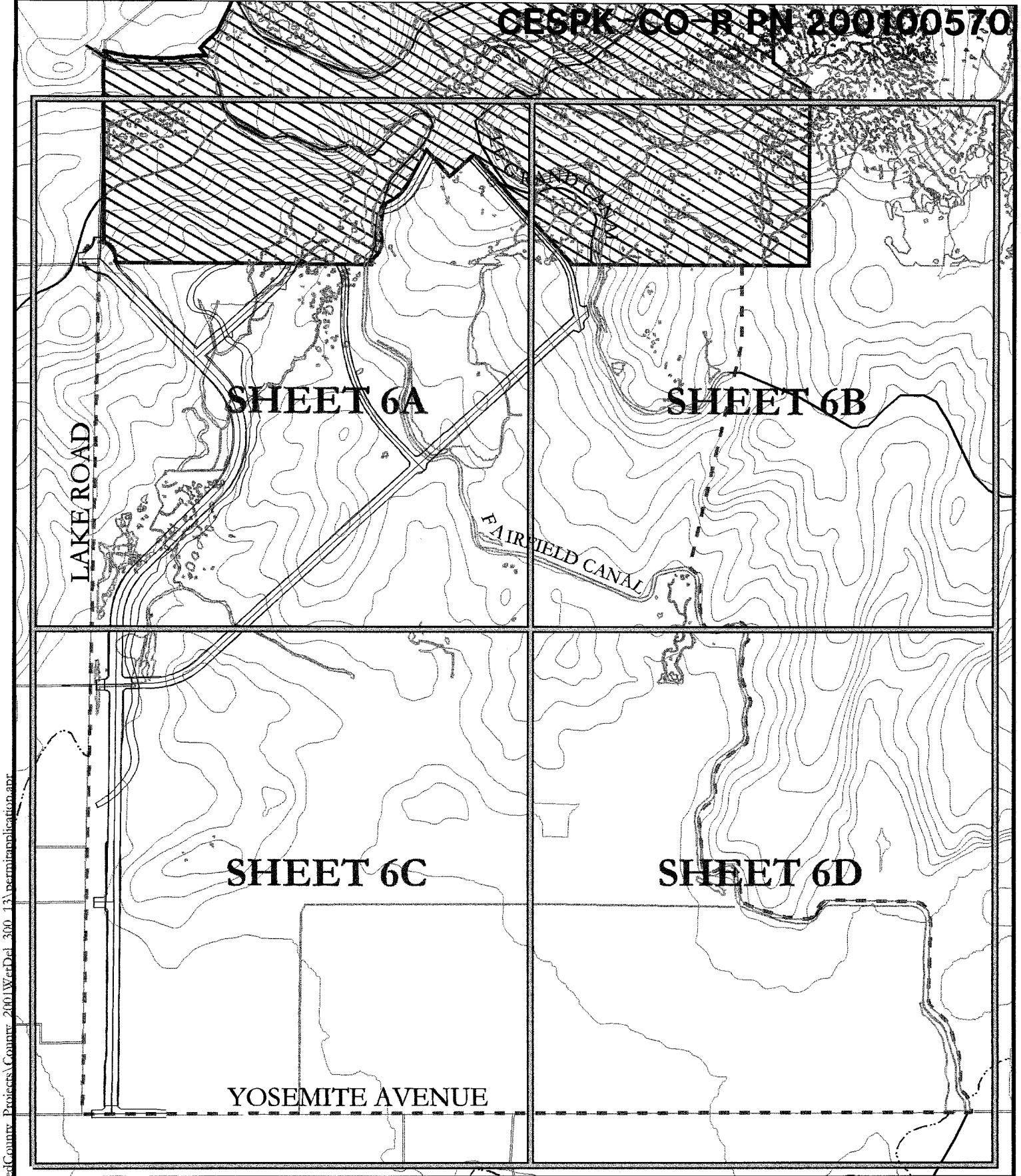

EIP ASSOCIATES

0 1,600
Feet

N

Source: Merced County, Planning & Community Dev. Dept., Creeks, Canals, Roads, June 1999; Nolte Associates, Inc., Road, December, 2001; and EIP Associates, Wetlands & GIS Program, January 2002.

UC Merced Main Campus
University Community Plan Area
Wetlands
Index Boundary
Infrastructure Project

FIGURE 6

SHEET INDEX FOR PROJECT WETLANDS

County of Merced Infrastructure Project in Support of UC Merced
Merced County, CA

C:\GISProjects_10\MercedCounty_Projects\County_2001\WetDel_300_13\permitapplication.apr

CESPK-CO-R PN 200100570

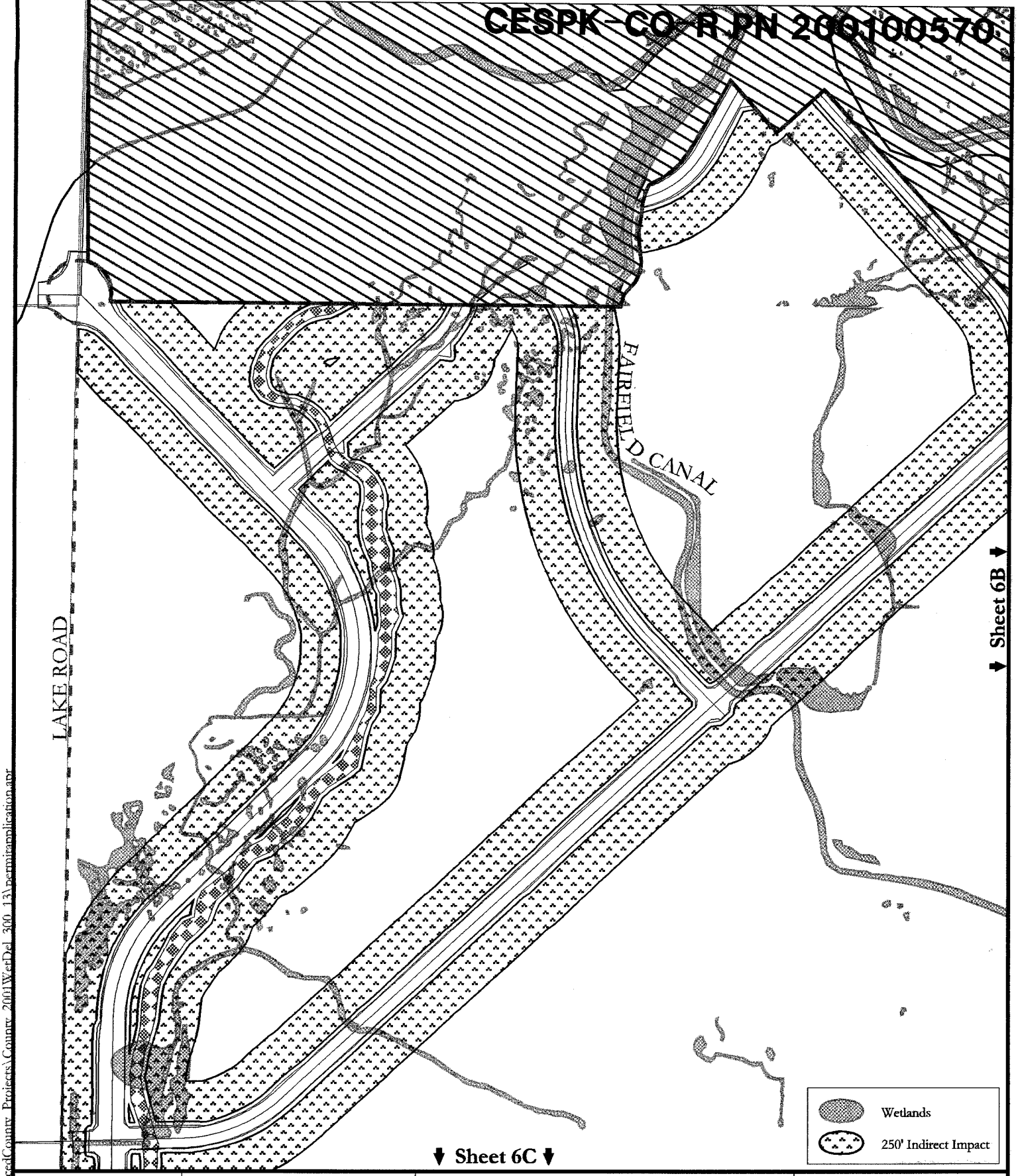

EIP ASSOCIATES

0 800
Feet

Source: Merced County, Planning & Community Dev. Dept., Creeks, Canals, Roads, June 1999; Nolte Associates, Inc., Road files, December, 2001; and EIP Associates, Wetlands & GIS Program, January 2002.

UC Merced Main Campus

University Community Plan Area

Infrastructure Project

Roadway

Stormwater Collection Channel

SHEET 6A

WETLANDS IN RELATION TO PROJECT

County of Merced Infrastructure Project in Support of UC Merced

Merced County, CA

C:\GIS\Projects_10\MercedCounty_Projects\County_2001\WetDel_300_13\permitapplication.apr

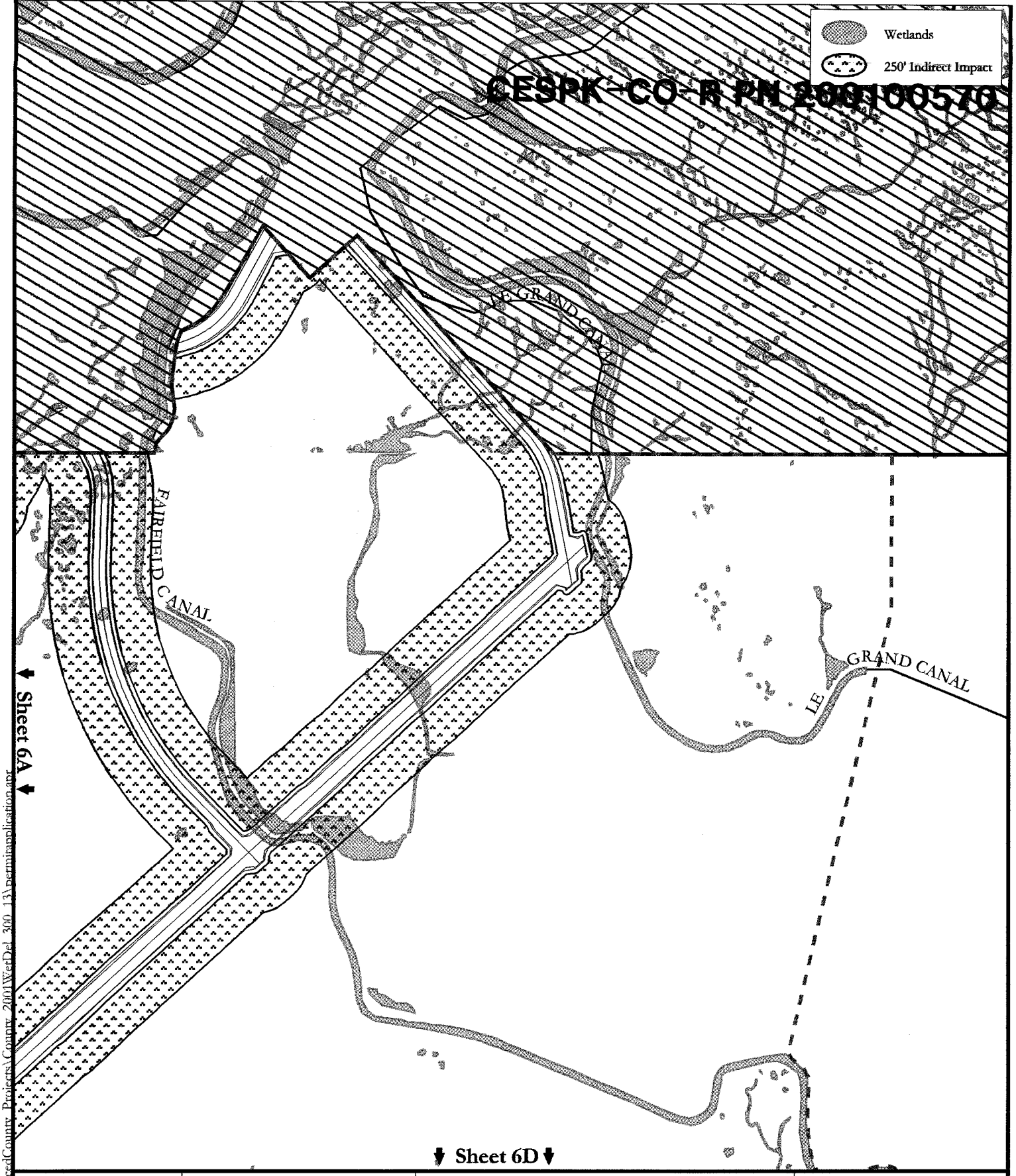

EIP ASSOCIATES

0 800 Feet

Source: Merced County, Planning & Community Dev. Dept., Creeks, Canals, Roads, June 1999; Nolte Associates, Inc., Road files, December, 2001; and EIP Associates, Wetlands & GIS Program, January 2002.

UC Merced Main Campus

University Community Plan Area

Infrastructure Project

Roadway

SHEET 6B

WETLANDS IN RELATION TO PROJECT

County of Merced Infrastructure Project in Support of UC Merced

Merced County, CA

C:\GISProjects_10\MercedCounty_Projects\County_2001\WetDel_300_13\permitapplication.apr

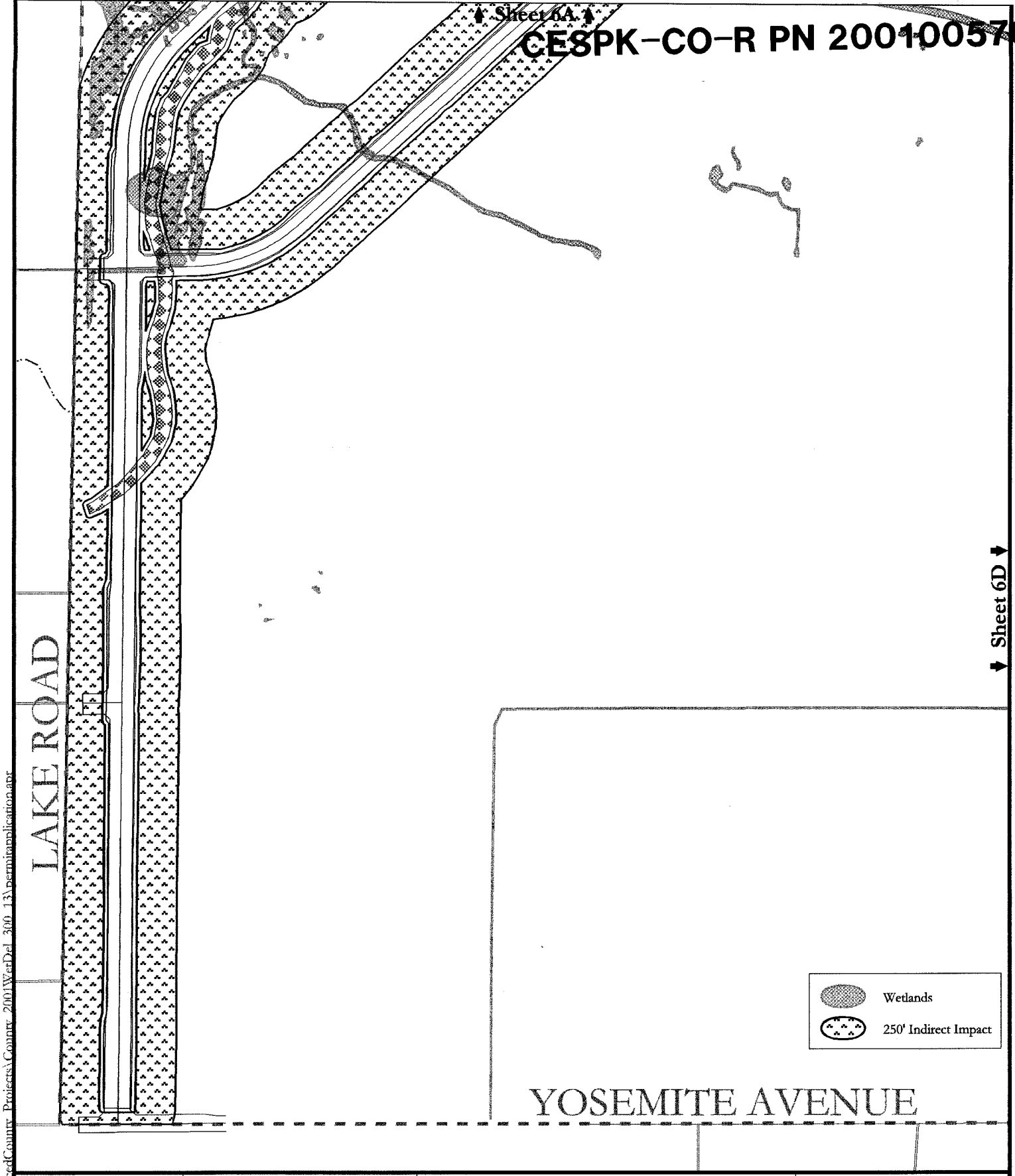

EIP ASSOCIATES

0 800
Feet

Source: Merced County, Planning & Community Dev. Dept., Creeks, Canals, Roads, June 1999; Nolte Associates, Inc., Road files, December, 2001; and EIP Associates, Wetlands & GIS Program, January 2002.

University Community Plan Area

Infrastructure Project

Roadway

Stormwater Collection Channel

SHEET 6C

WETLANDS IN RELATION TO PROJECT

County of Merced Infrastructure Project in Support of UC Merced

Merced County, CA

C:\GISProjects_10\MercedCounty_Projects\County_2001WetDel_300_13\permitapplication.apr

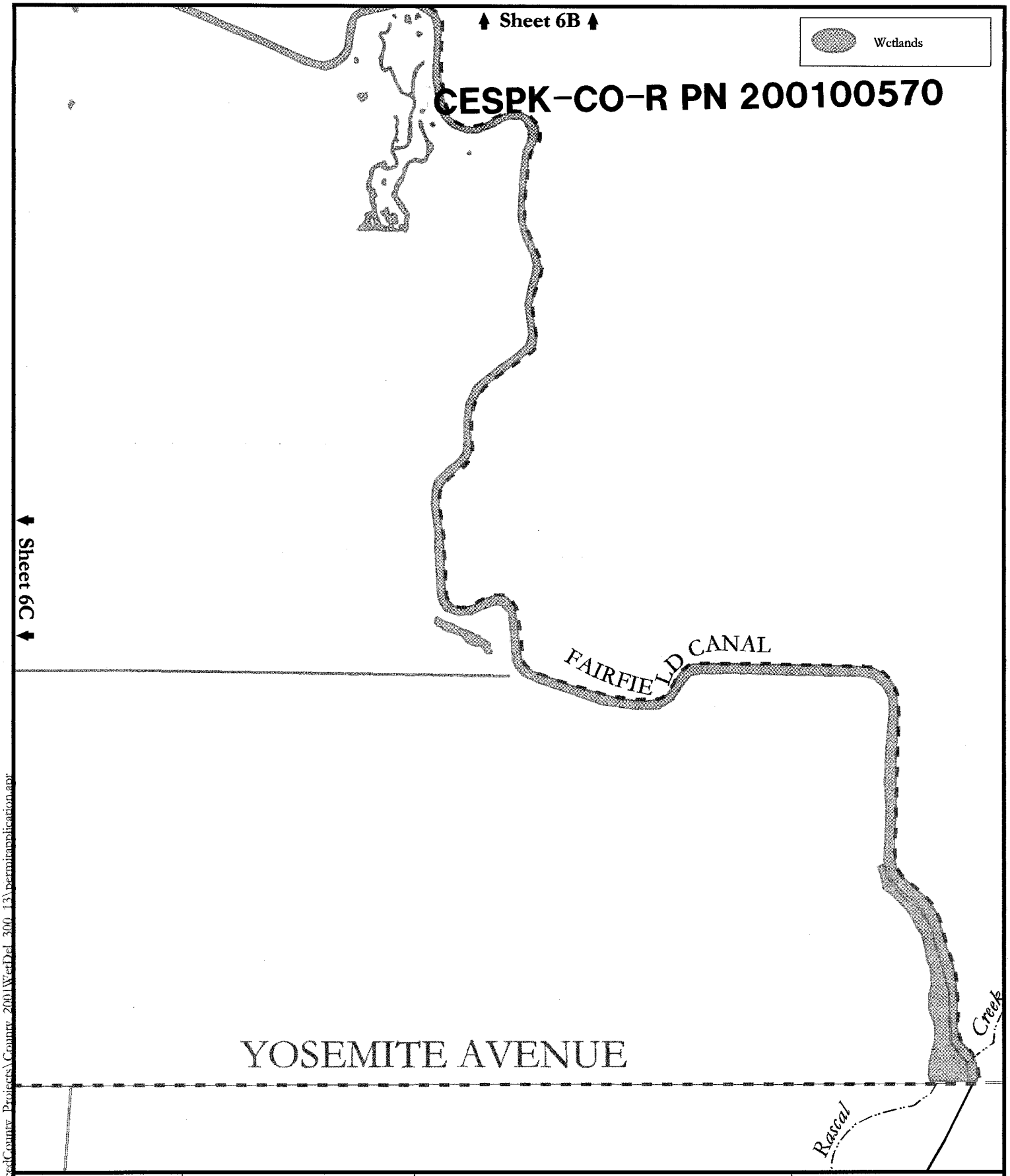

EIP ASSOCIATES

0 800
Feet

Source: Merced County, Planning & Community Dev. Dept., Creeks, Canals, Roads, June 1999; Nolte Associates, Inc., Road files, December, 2001; and EIP Associates, Wetlands & GIS Program, January 2002.

University Community Plan Area

SHEET 6D

WETLANDS IN RELATION TO PROJECT

County of Merced Infrastructure Project in Support of UC Merced
Merced County, CA

C:\GIS\Projects_10\MercedCounty_Projects\County_2001\WetDel_300_13\permitapplication.apr