Figure 1 of 29

Route 65 Lincoln Bypass
Placer County, California
3-PLA-Route 65 - KP R19.6 (PM R12.2) - KP R38.3 (PM 23.8)
EA Number 333800
Regional Location

SOURCE: LSA ASSOCIATES, INC.

I:\CDT230F\graphics\404_app\fig1-loc.cdr (2/12/04)

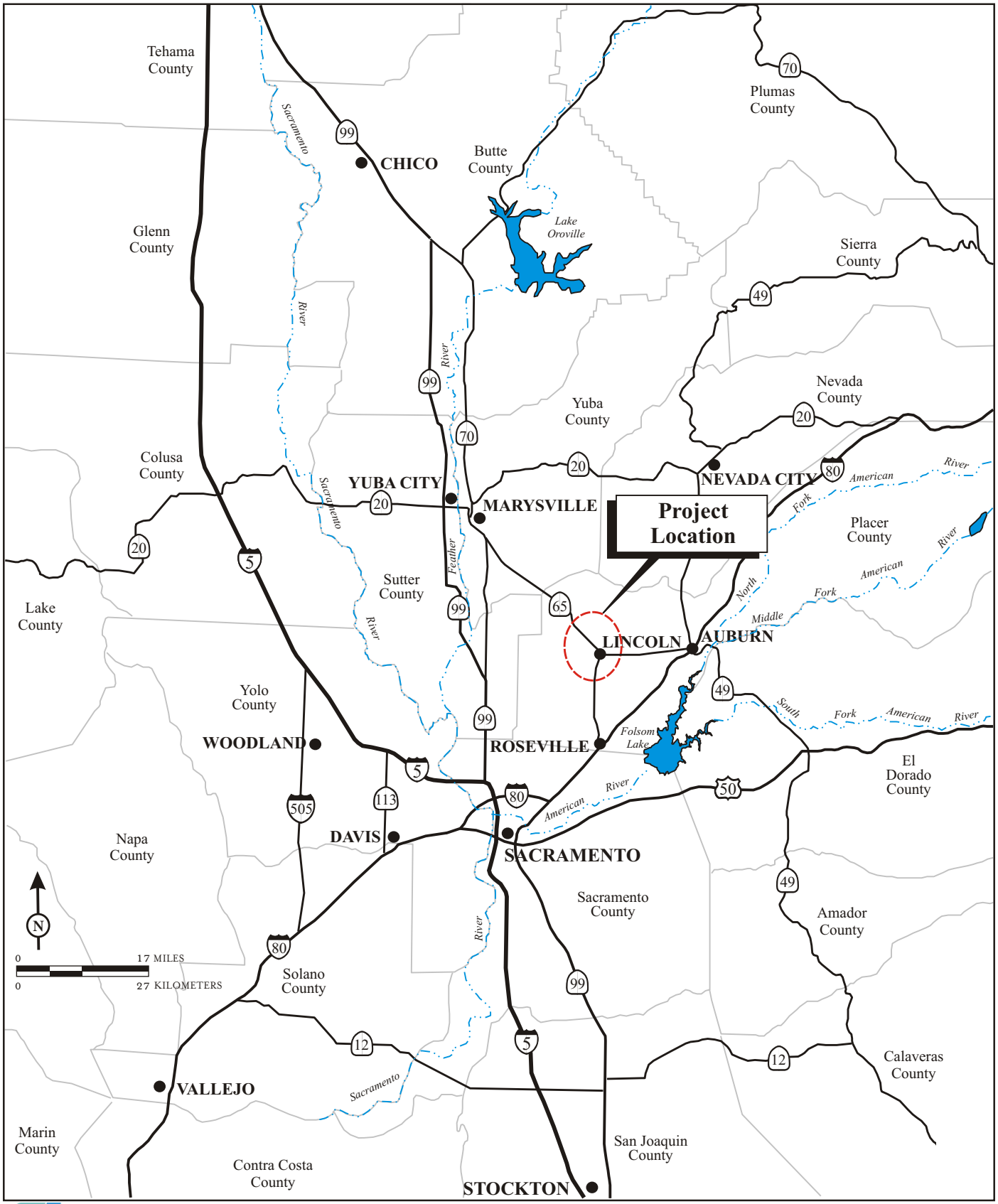

Figure 2 of 29

Route 65 Lincoln Bypass
Placer County, California
3-PLA-Route 65 - KP R19.6 (PM R12.2) - KP R38.3 (PM 23.8)
EA Number 333800
Project Vicinity

SOURCE: LSA ASSOCIATES, INC.

I:CDT230F\graphics\404_app\fig2-vic.cdr (2/12/04)

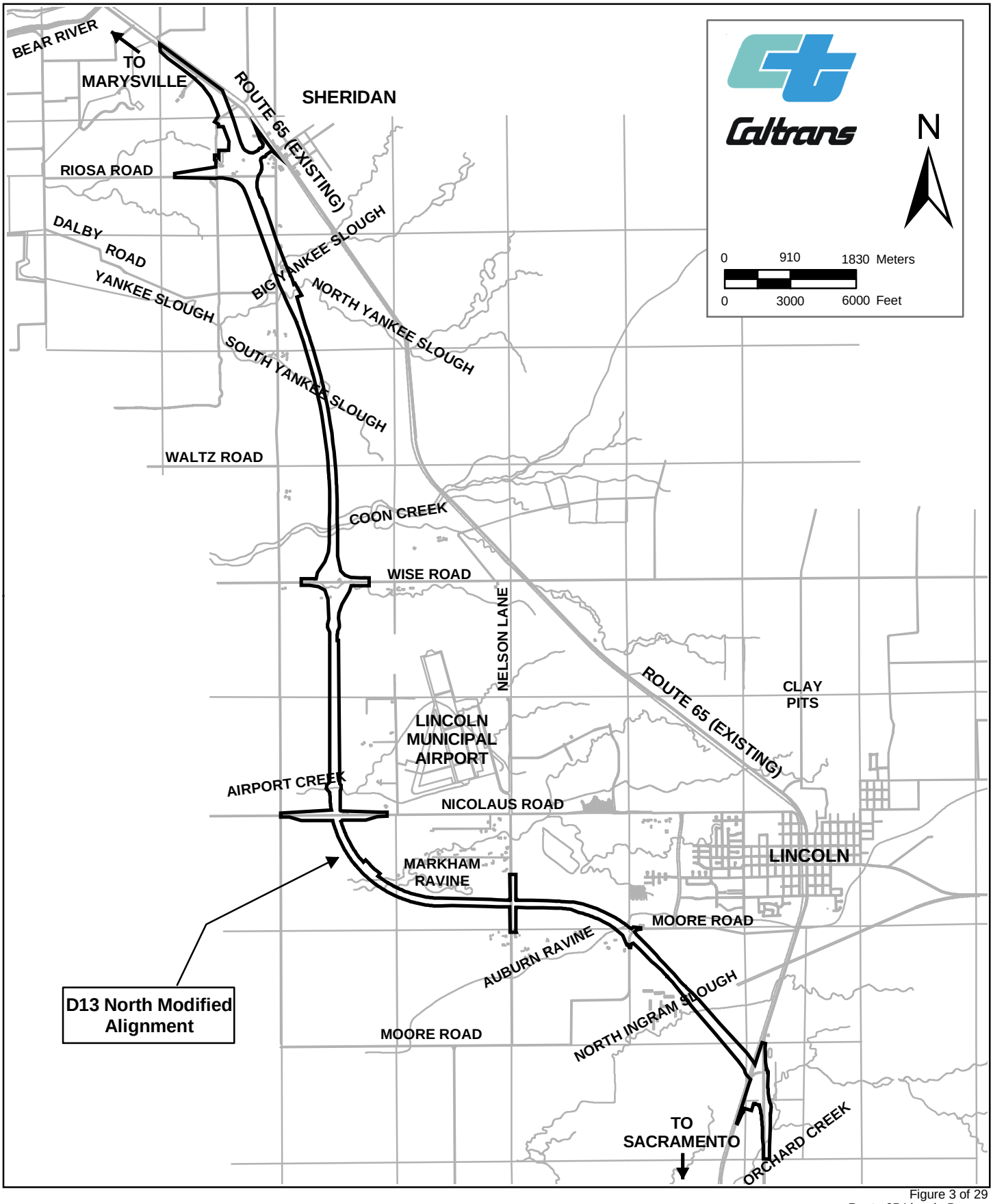

Figure 3 of 29
Route 65 Lincoln Bypass
Placer County, California
3-PLA-Route 65-KP R19.6 (PM R12.2) - KP R38.3 (PM 23.8)
EA Number 333800
Project Features

SOURCE: BASE MAP - CALTRANS, 1999

I:\CDT230F\GIS\ArcGIS\404_APP\fig3-proj_feat.mxd (1/13/04)

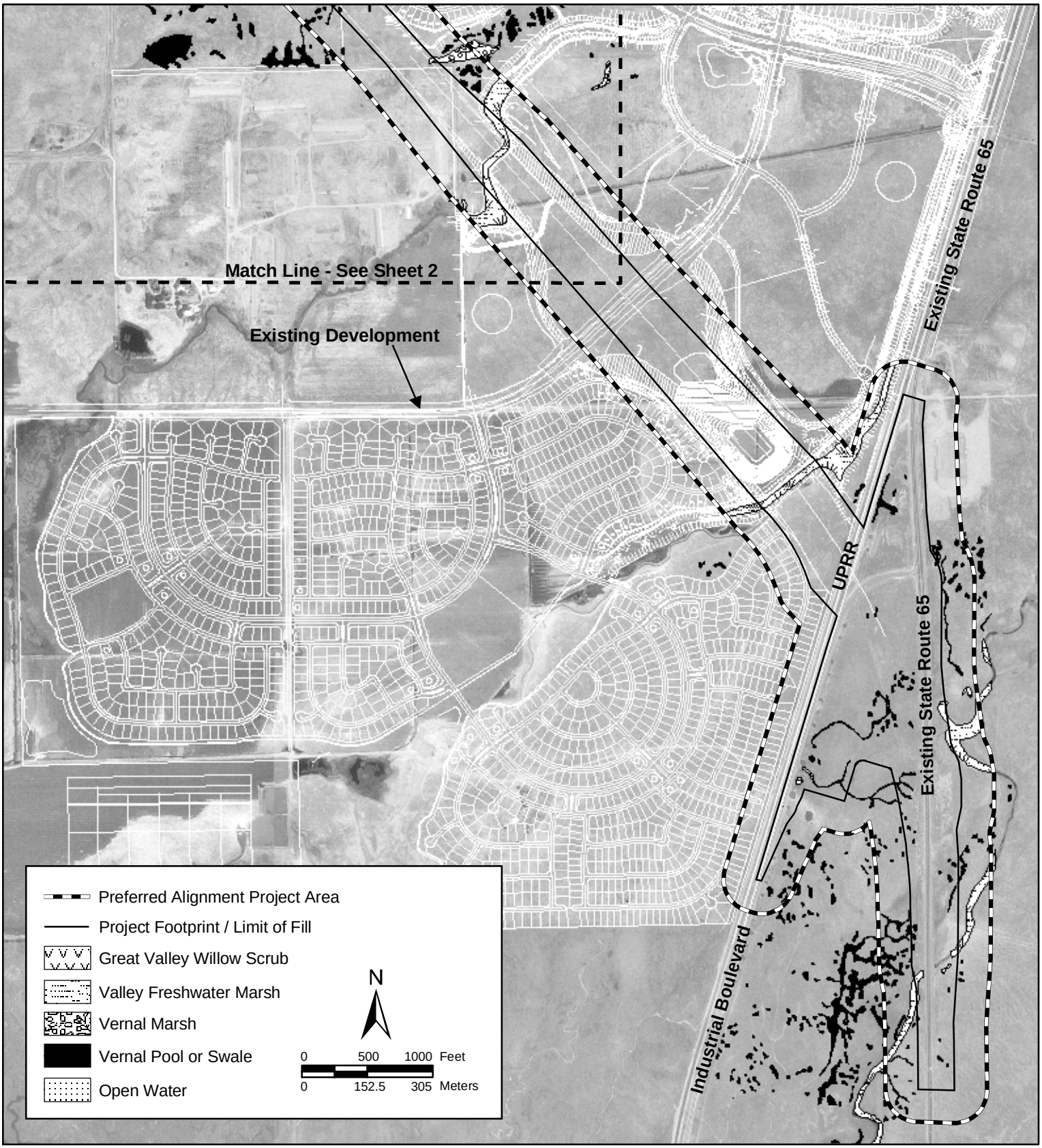

Figure 4 of 29

Route 65 Lincoln Bypass
Placer County, California
3-PLA-Route 65-KP R19.6 (PM R12.2) - KP R38.3 (PM 23.8)
EA Number 333800
Plan View

Source: Basemap - USGS Digital Orthoquad
Mapping - LSA Associates, Inc.

I:\Cdt230F\gis\ArcGIS\404_app\fig4_plan.mxd (3/29/04)

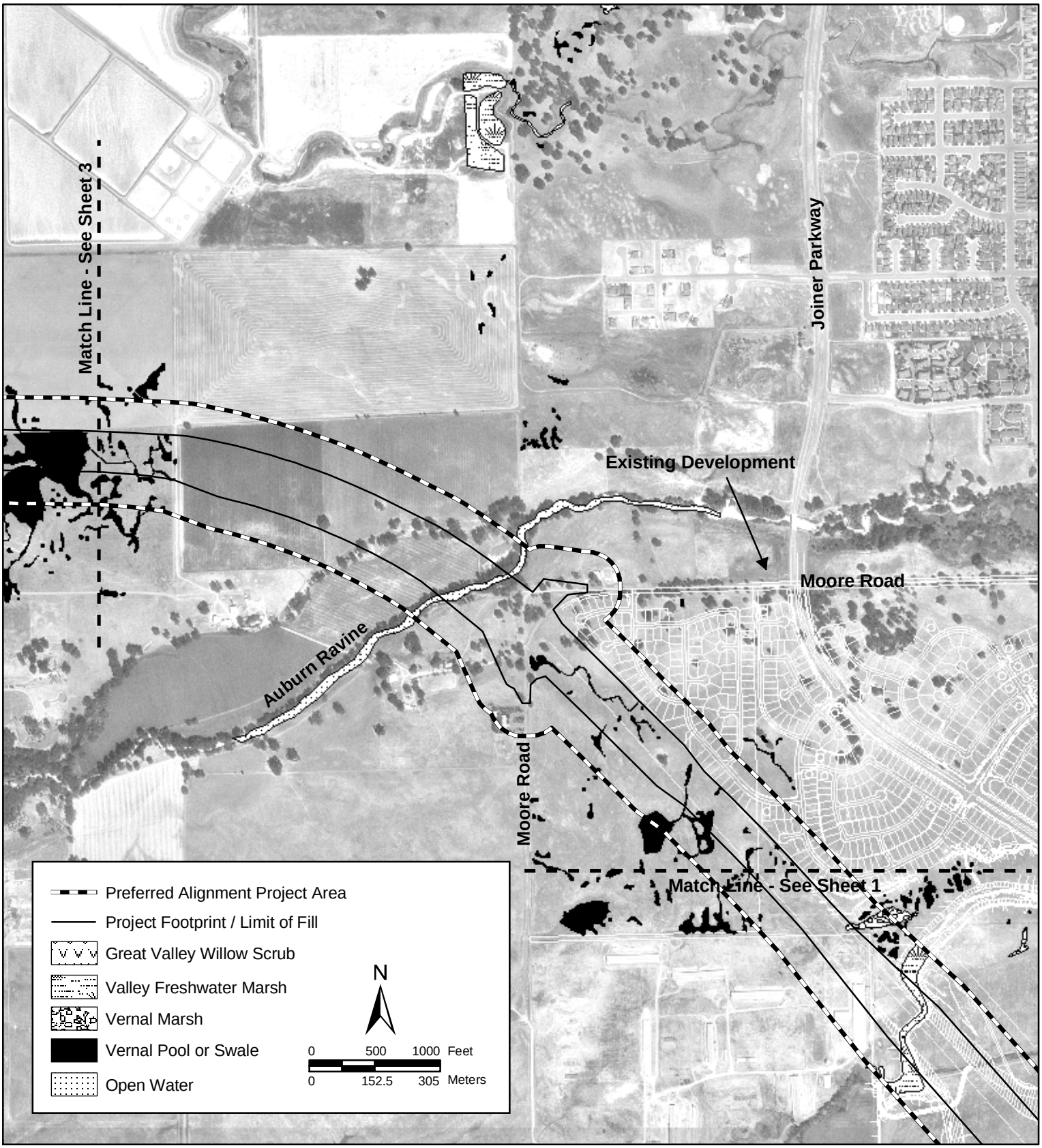

Figure 5 of 29

Route 65 Lincoln Bypass
Placer County, California
3-PLA-Route 65-KP R19.6 (PM R12.2) - KP R38.3 (PM 23.8)
EA Number 333800
Plan View

Source: Basemap - USGS Digital Orthoquad
Mapping - LSA Associates, Inc.

I:\Cdt230F\gis\ArcGIS\404_app\fig5_plan.mxd (3/29/04)

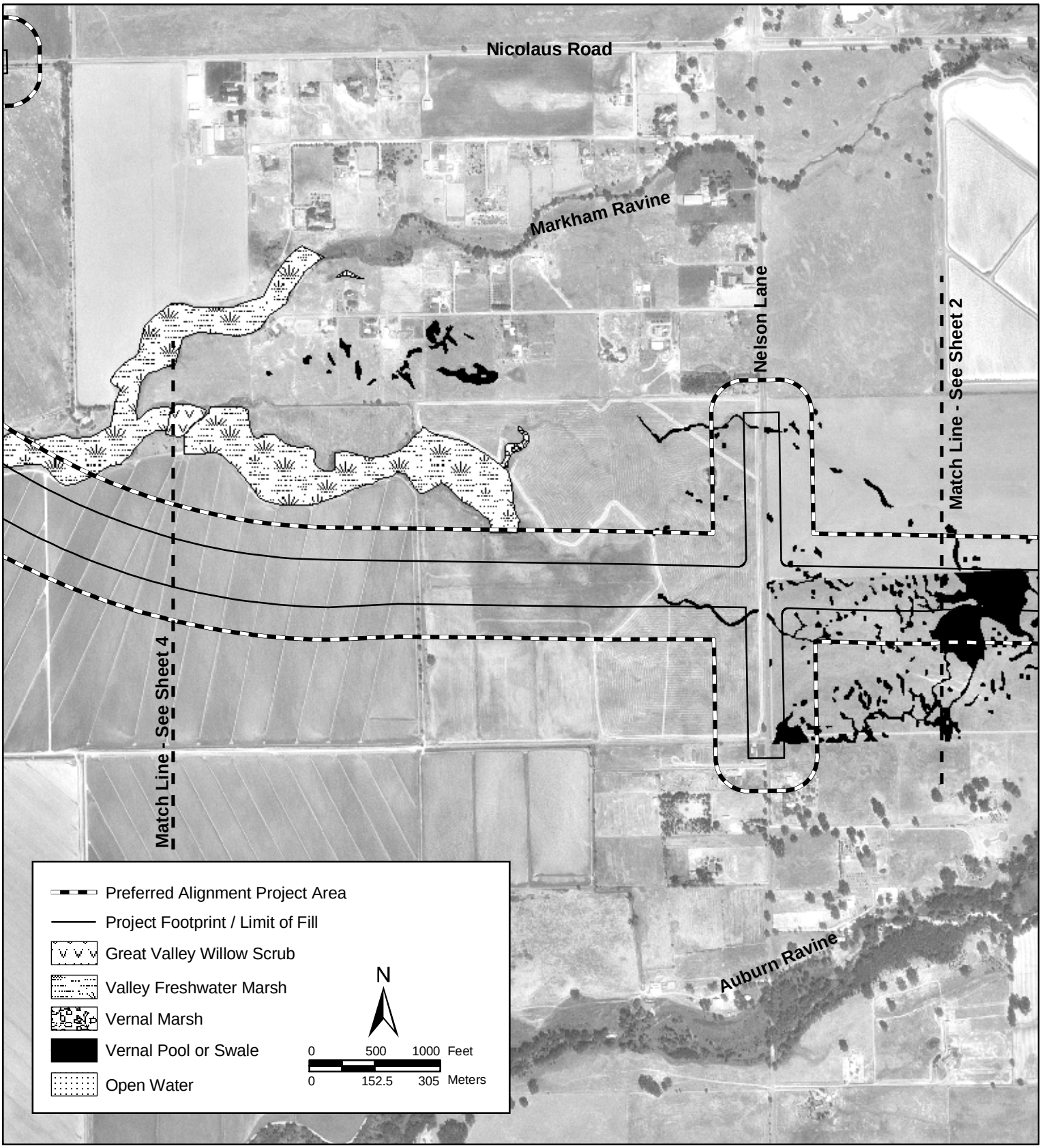

Figure 6 of 29

Route 65 Lincoln Bypass
Placer County, California
3-PLA-Route 65-KP R19.6 (PM R12.2) - KP R38.3 (PM 23.8)
EA Number 333800
Plan View

Source: Basemap - USGS Digital Orthoquad
Mapping - LSA Associates, Inc.

I:\Cdt230F\gis\ArcGIS\404_app\fig6_plan.mxd (3/29/04)

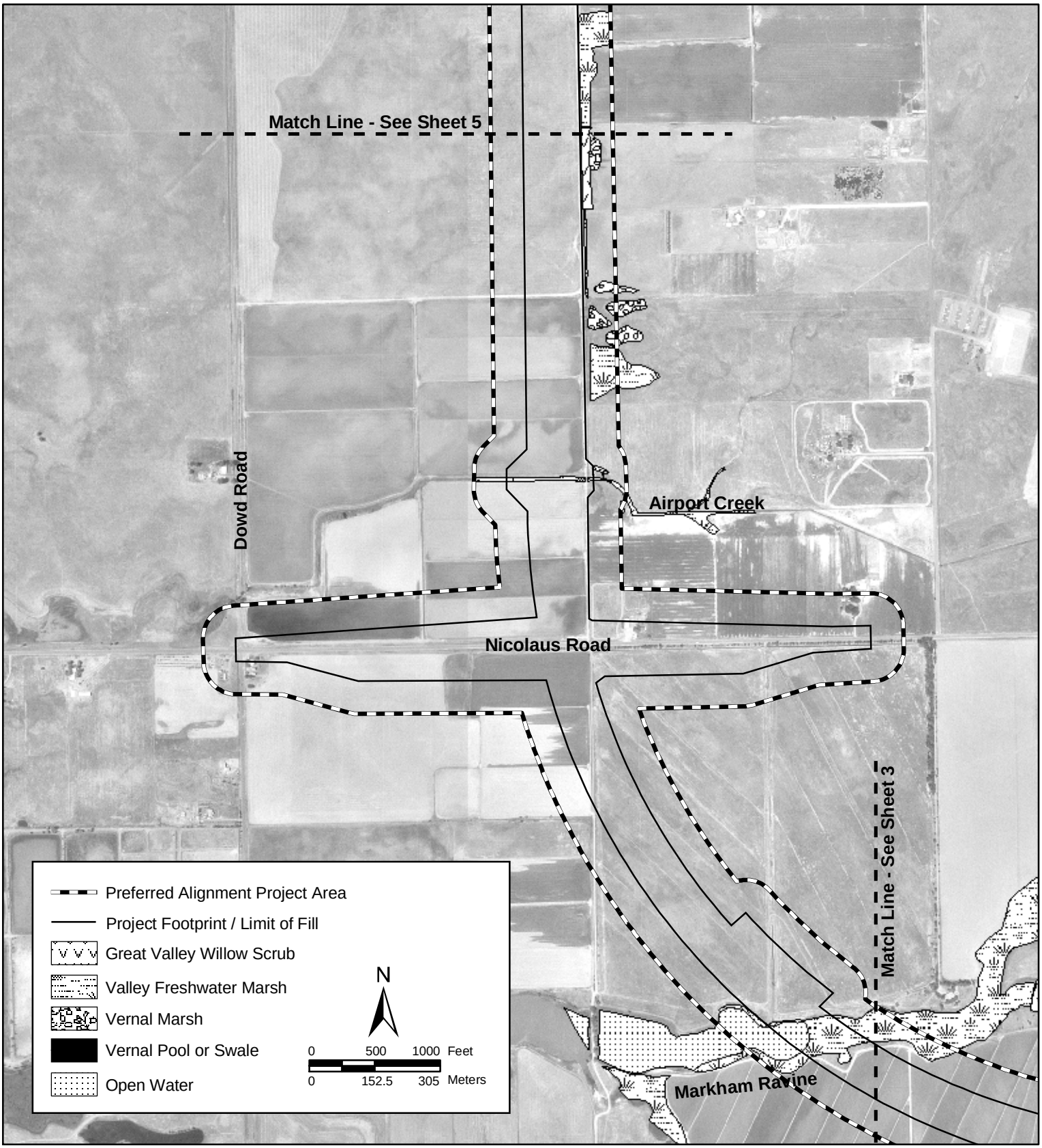

Figure 7 of 29

Route 65 Lincoln Bypass
Placer County, California
3-PLA-Route 65-KP R19.6 (PM R12.2) - KP R38.3 (PM 23.8)
EA Number 333800
Plan View

Source: Basemap - USGS Digital Orthoquad
Mapping - LSA Associates, Inc.

I:\Cdt230F\gis\ArcGIS\404_app\fig7_plan.mxd (3/29/04)

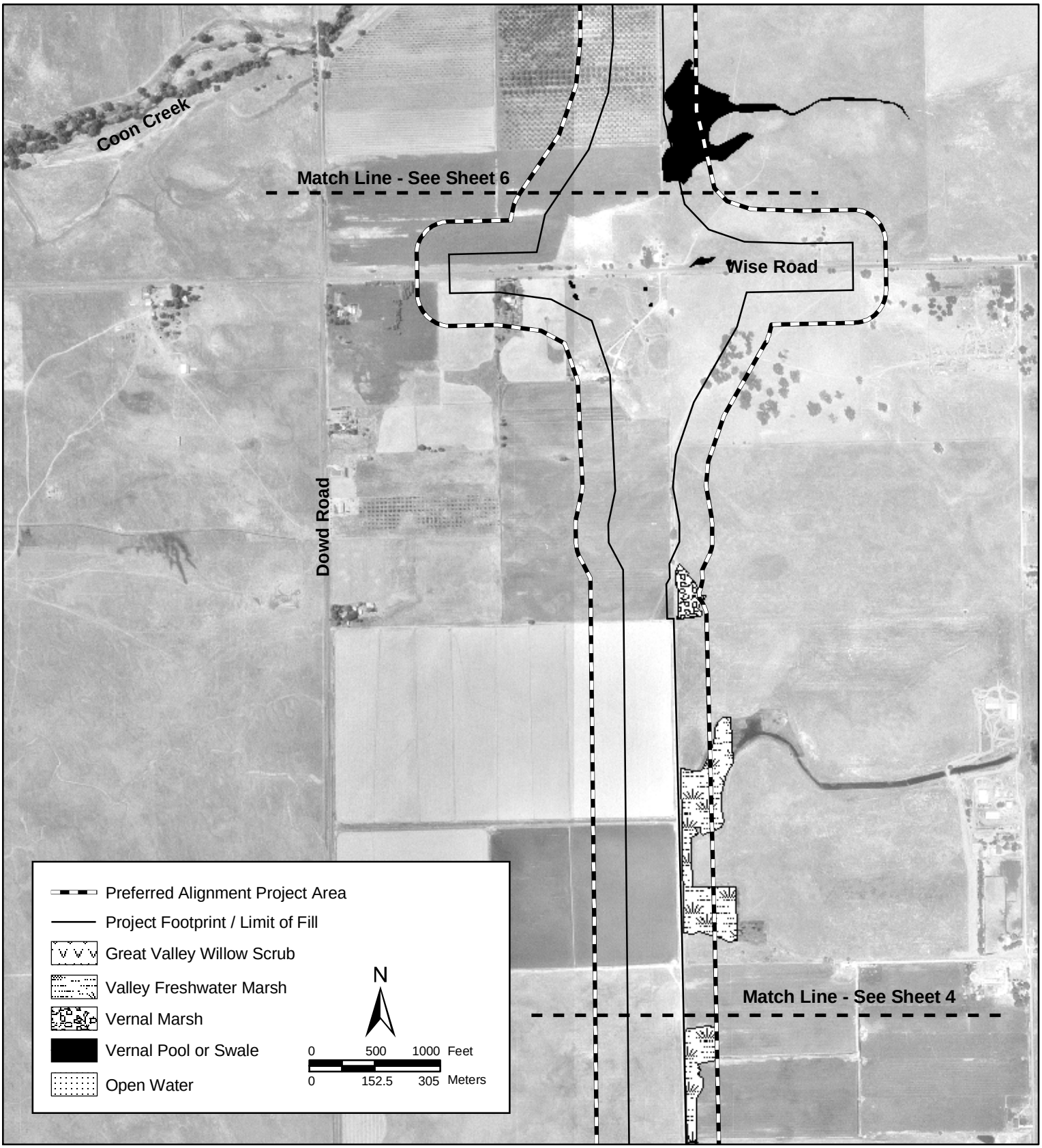

Figure 8 of 29

Route 65 Lincoln Bypass
Placer County, California
3-PLA-Route 65-KP R19.6 (PM R12.2) - KP R38.3 (PM 23.8)
EA Number 333800
Plan View

Source: Basemap - USGS Digital Orthoquad
Mapping - LSA Associates, Inc.

I:\Cdt230F\gis\ArcGIS\404_app\fig8_plan.mxd (3/29/04)

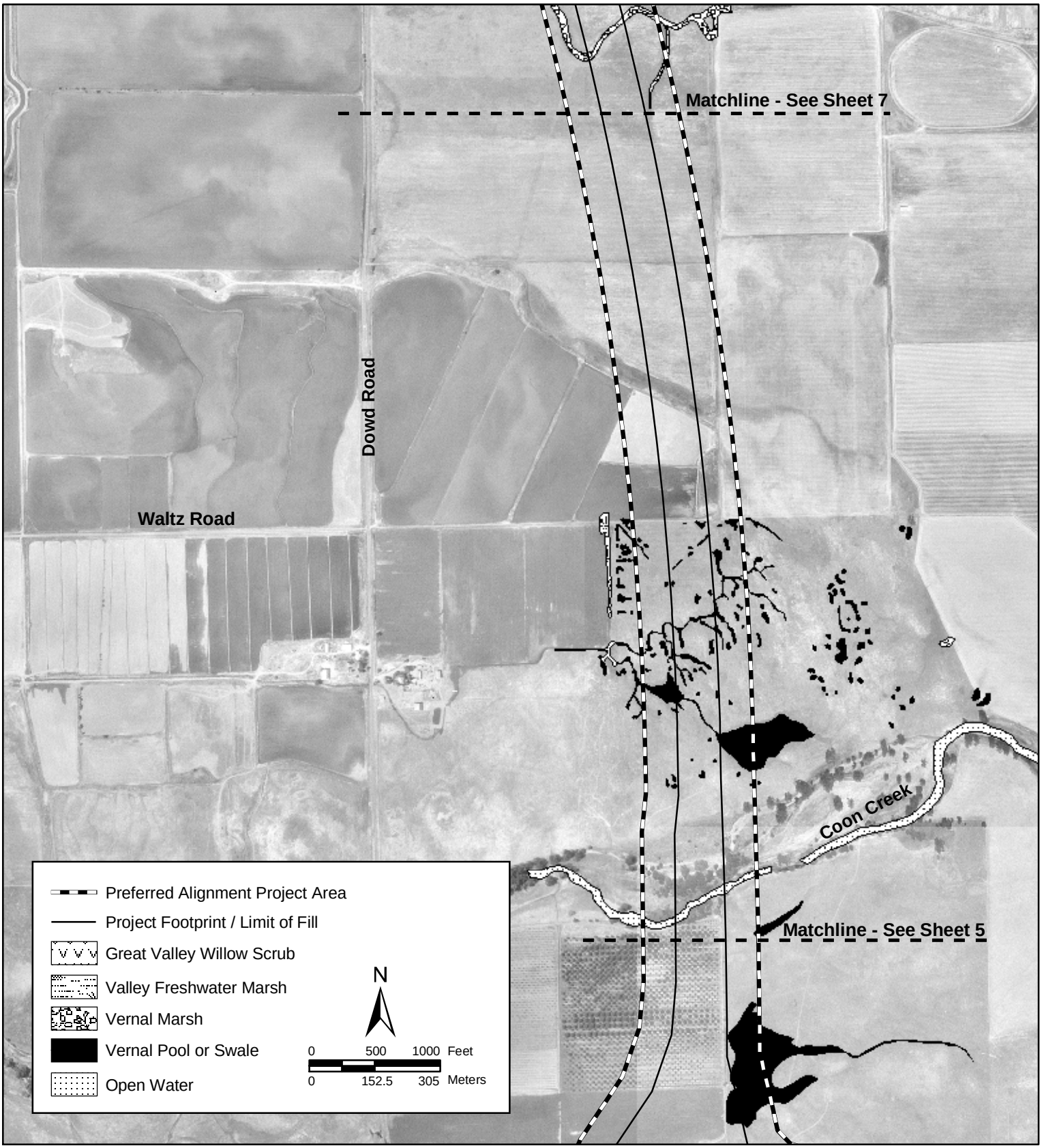

Figure 9 of 29

Route 65 Lincoln Bypass
Placer County, California
3-PLA-Route 65-KP R19.6 (PM R12.2) - KP R38.3 (PM 23.8)
EA Number 333800
Plan View

Source: Basemap - USGS Digital Orthoquad
Mapping - LSA Associates, Inc.

I:\Cdt230F\gis\ArcGIS\404_app\fig9_plan.mxd (3/29/04)

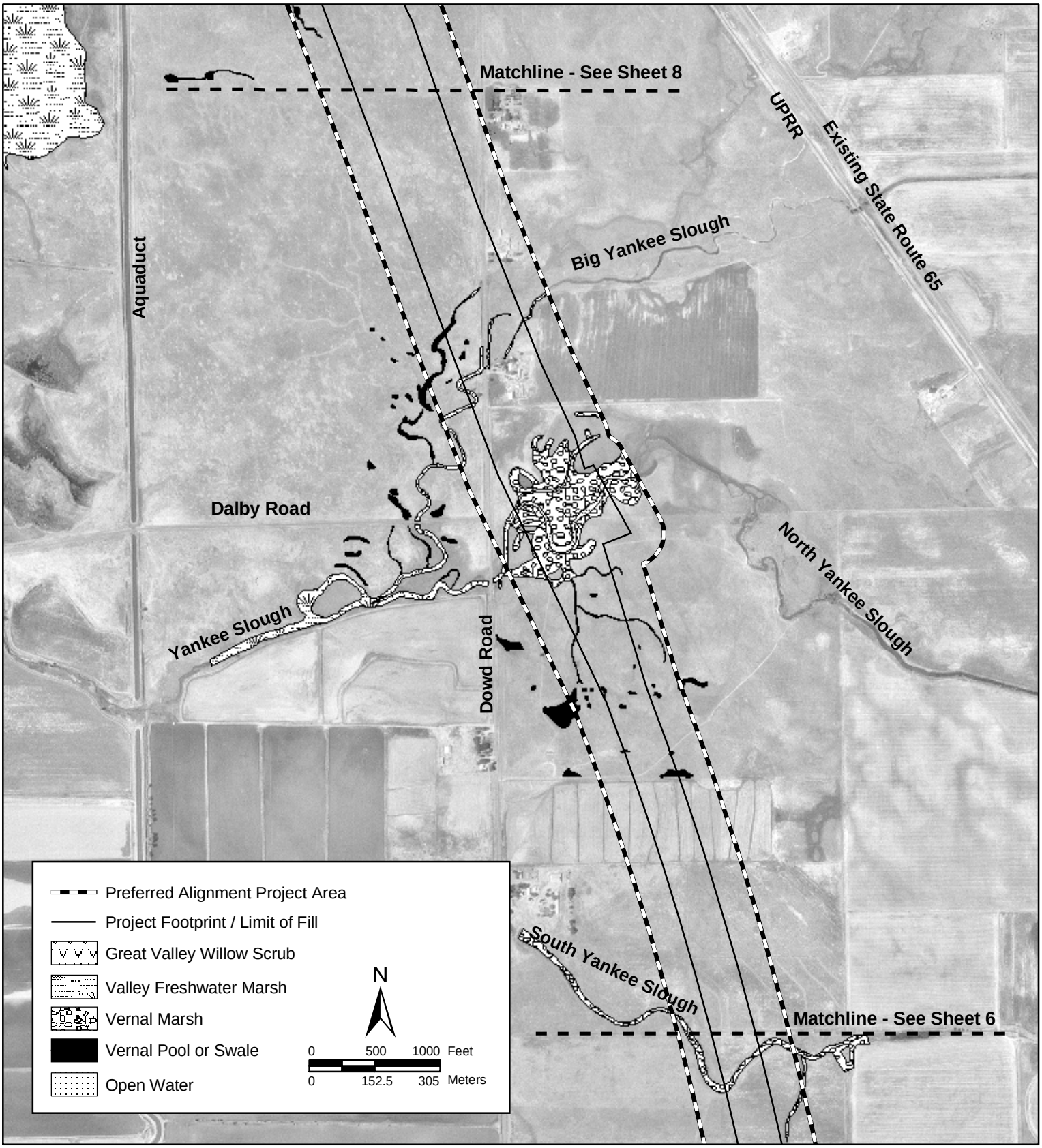

Figure 10 of 29

Route 65 Lincoln Bypass
Placer County, California
3-PLA-Route 65-KP R19.6 (PM R12.2) - KP R38.3 (PM 23.8)
EA Number 333800
Plan View

Source: Basemap - USGS Digital Orthoquad
Mapping - LSA Associates, Inc.

I:\Cdt230F\gis\ArcGIS\404_app\fig10_plan.mxd (3/29/04)

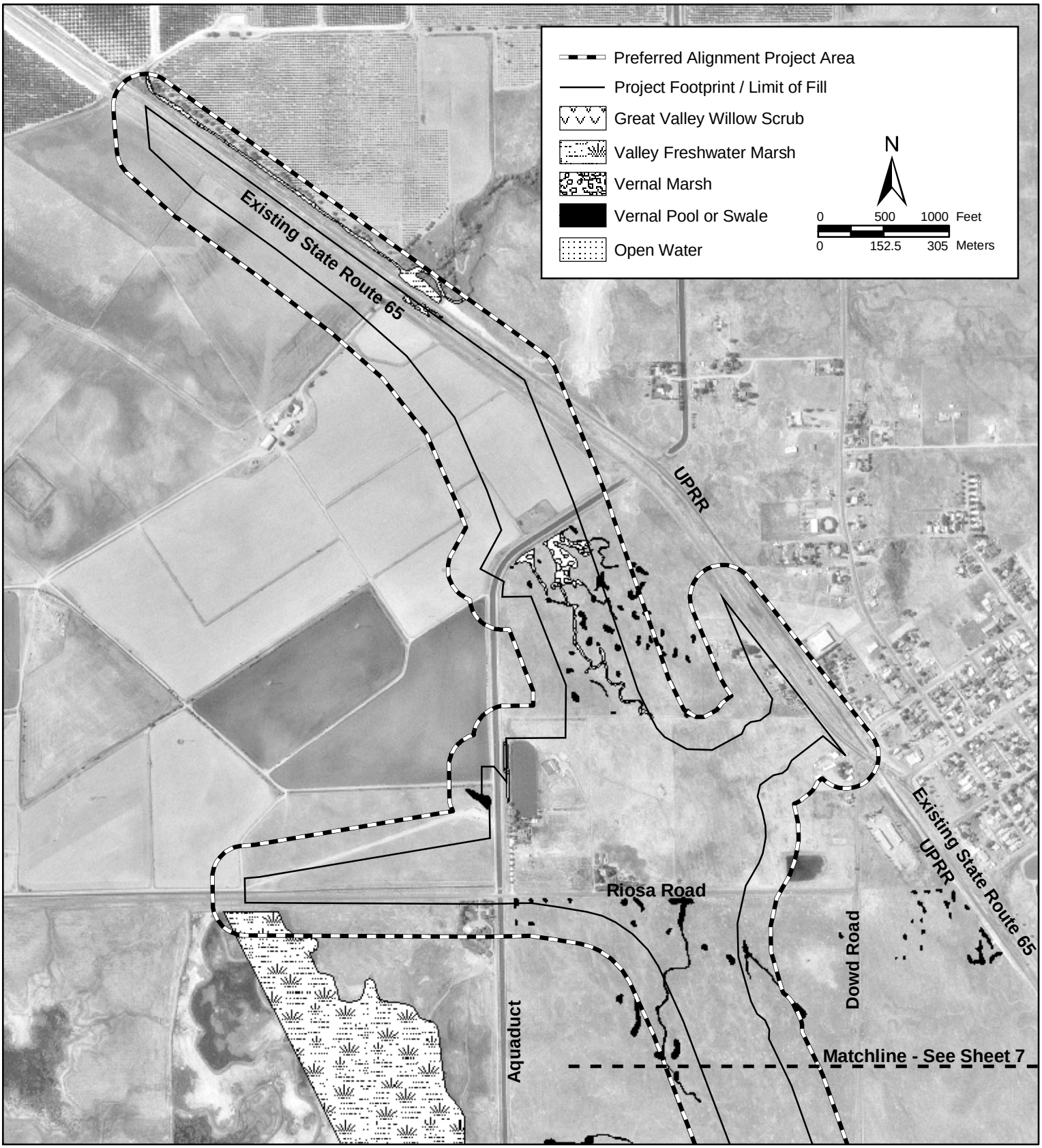

Caltrans

Figure 11 of 29

Route 65 Lincoln Bypass
Placer County, California
3-PLA-Route 65-KP R19.6 (PM R12.2) - KP R38.3 (PM 23.8)
EA Number 333800
Plan View

Source: Basemap - USGS Digital Orthoquad
Mapping - LSA Associates, Inc.

I:\Cdt230F\gis\ArcGIS\404_app\fig11_plan.mxd (3/29/04)

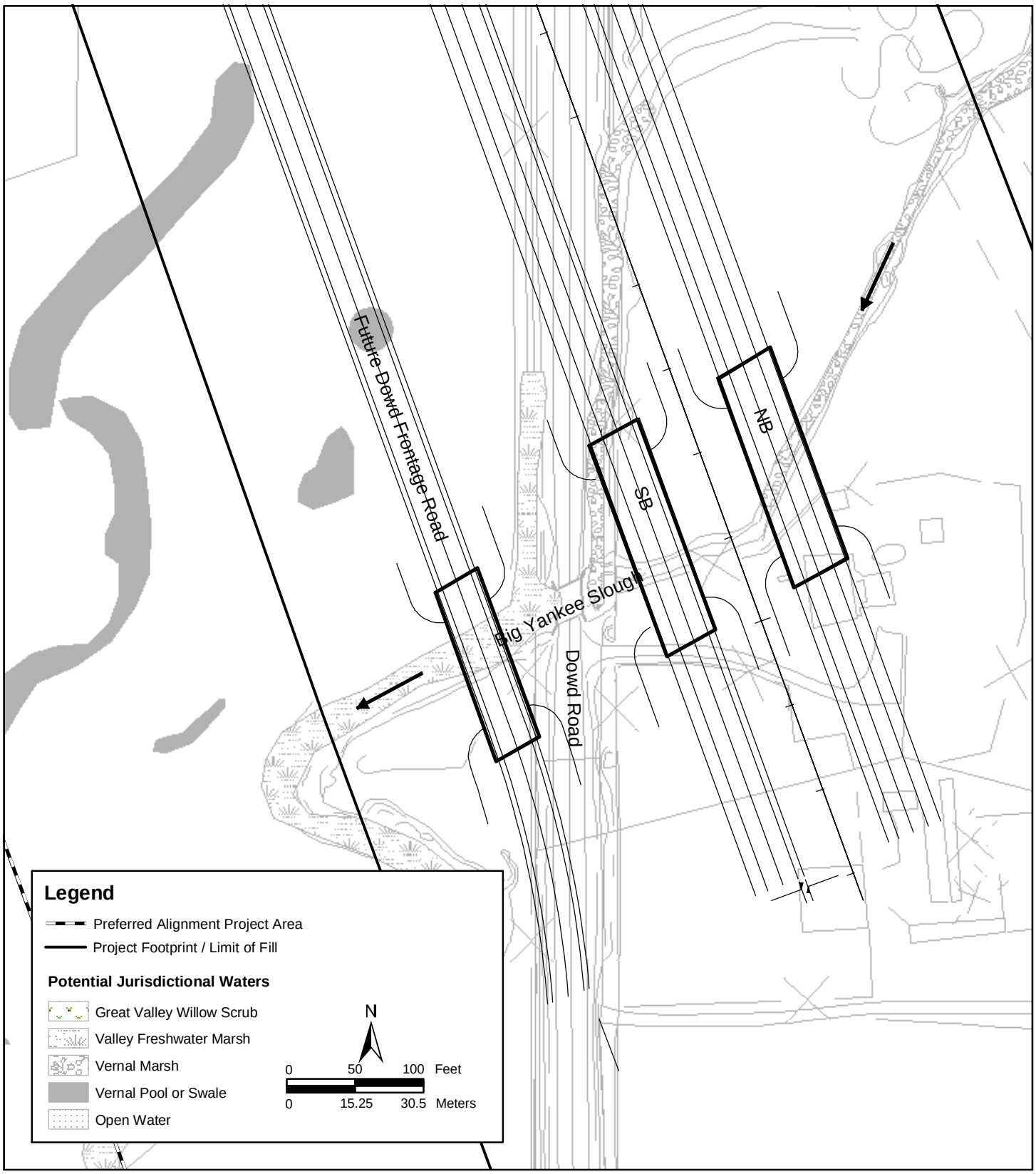

Figure 12 of 29

Caltrans

Route 65 Lincoln Bypass
Placer County, California
3-PLA-Route 65-KP R19.6 (PM R12.2) - KP R38.3 (PM 23.8)
EA Number 333800
Big Yankee Slough - Bridge Layout

SOURCE: BASEMAP - CALTRANS, 2004
MAPPING/GIS - LSA

I:\CDT230F\GIS\ARCGIS\404_APP\FIG12-BY-SLOUGH_LAY.MXD (3/26/04)

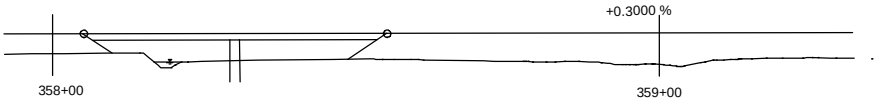

PROFILE

LOOKING DOWNSTREAM

0 50 100 Feet

0 15.25 30.5 Meters

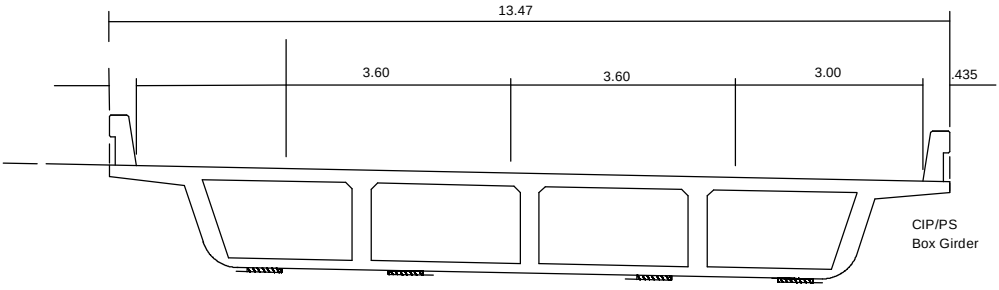

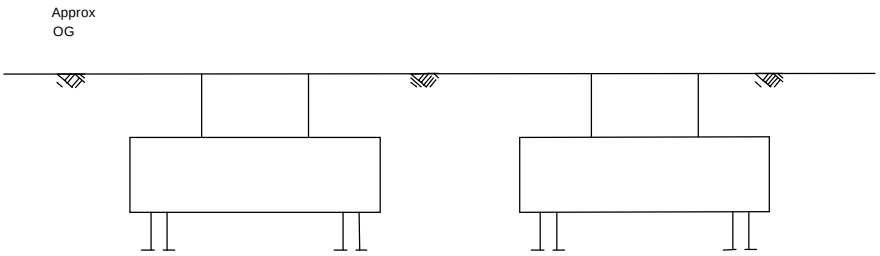

CROSS SECTION

0 5 10 Feet

0 1.5 3.0 Meters

Caltrans

Figure 13 of 29

Route 65 Lincoln Bypass
Placer County, California
3-PLA-Route 65-KP R19.6 (PM R12.2) - KP R38.3 (PM 23.8)
EA Number 333800
Big Yankee Slough - Typical Bridge Sections

SOURCE: CALTRANS, 2004

I:\CDT230F\GIS\ARCGIS\404_APP\FIG13-BY-SLOUGH_SECT.MXD (3/29/04)

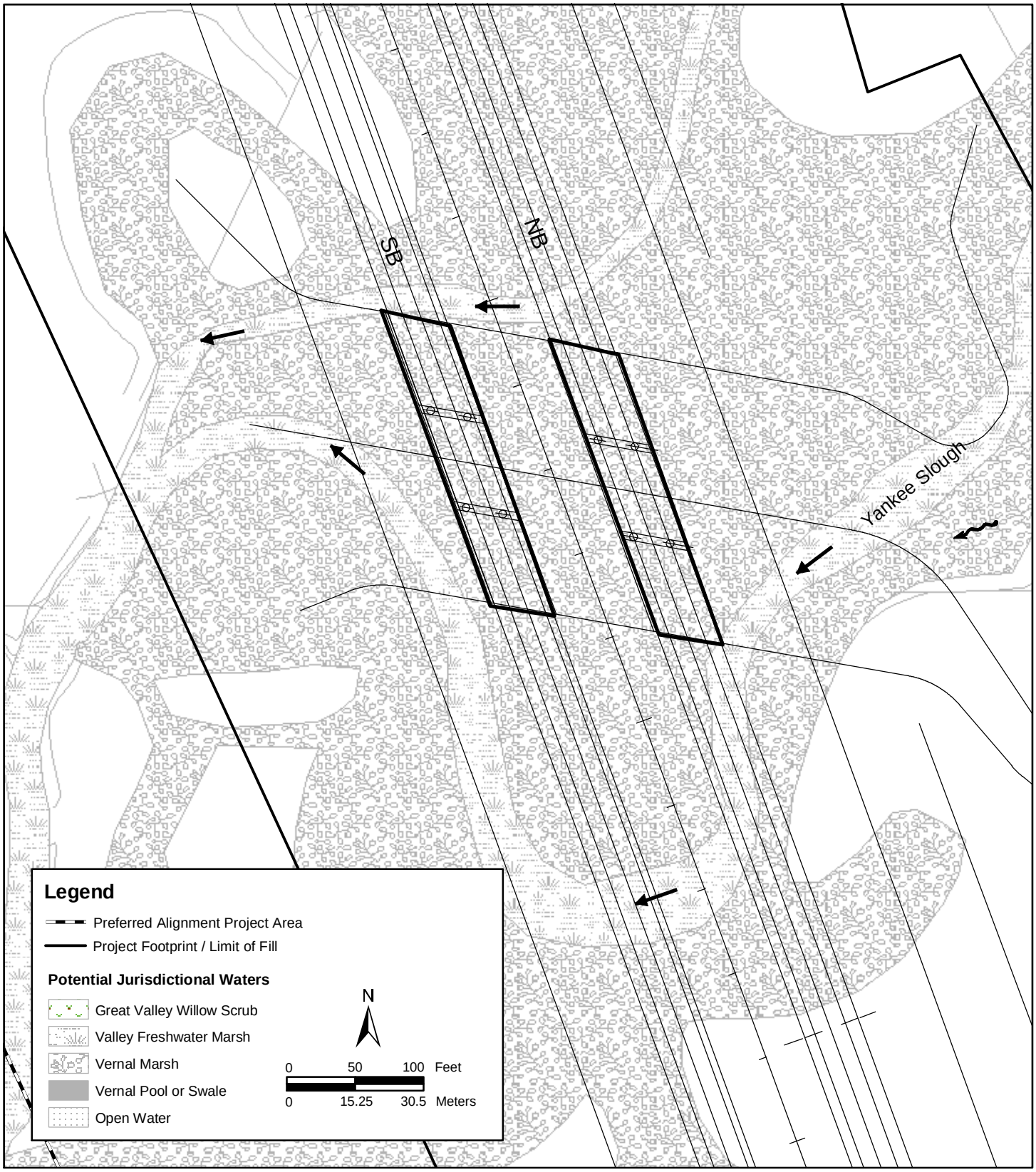

Figure 14 of 29

Caltrans

Route 65 Lincoln Bypass
Placer County, California
3-PLA-Route 65-KP R19.6 (PM R12.2) - KP R38.3 (PM 23.8)
EA Number 333800
North Yankee Slough - Bridge Layout

SOURCE: BASEMAP - CALTRANS, 2004
MAPPING/GIS - LSA

I:\CDT230F\GIS\ARCGIS\404_APP\FIG14-NY-SLOUGH_LAY.MXD (3/24/04)

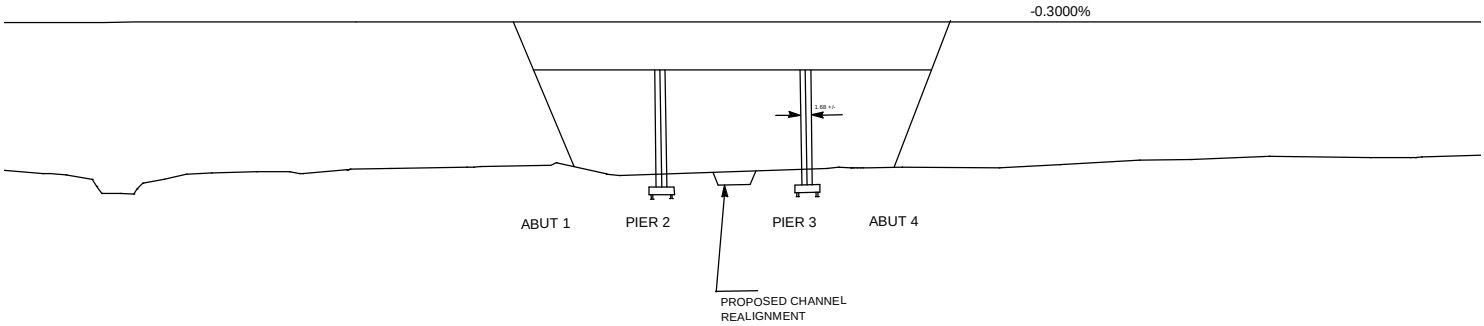

PROFILE

LOOKING DOWNSTREAM

0 50 100 Feet

0 15.25 30.5 Meters

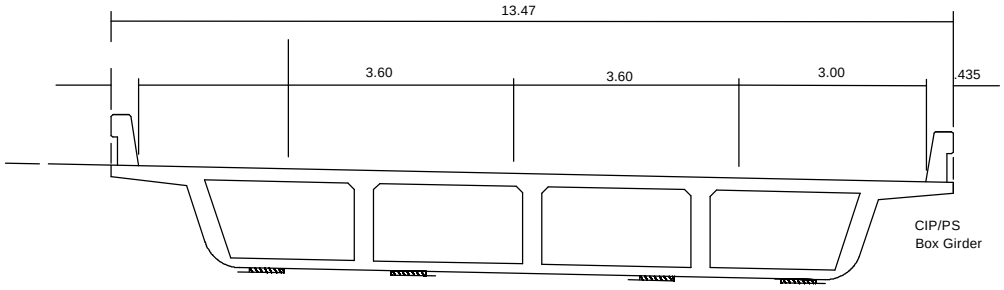

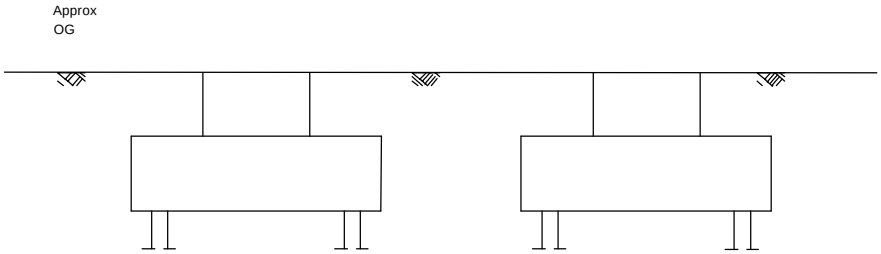

CROSS SECTION

0 5 10 Feet

0 1.52 3.05 Meters

Figure 15 of 29

Route 65 Lincoln Bypass
Placer County, California
3-PLA-Route 65-KP R19.6 (PM R12.2) - KP R38.3 (PM 23.8)
EA Number 333800
North Yankee Slough - Typical Bridge Sections

SOURCE: CALTRANS, 2004

I:\CDT230F\GIS\ARCGIS\404_APP\FIG15-NY-SLOUGH_SECT.MXD (3/29/04)

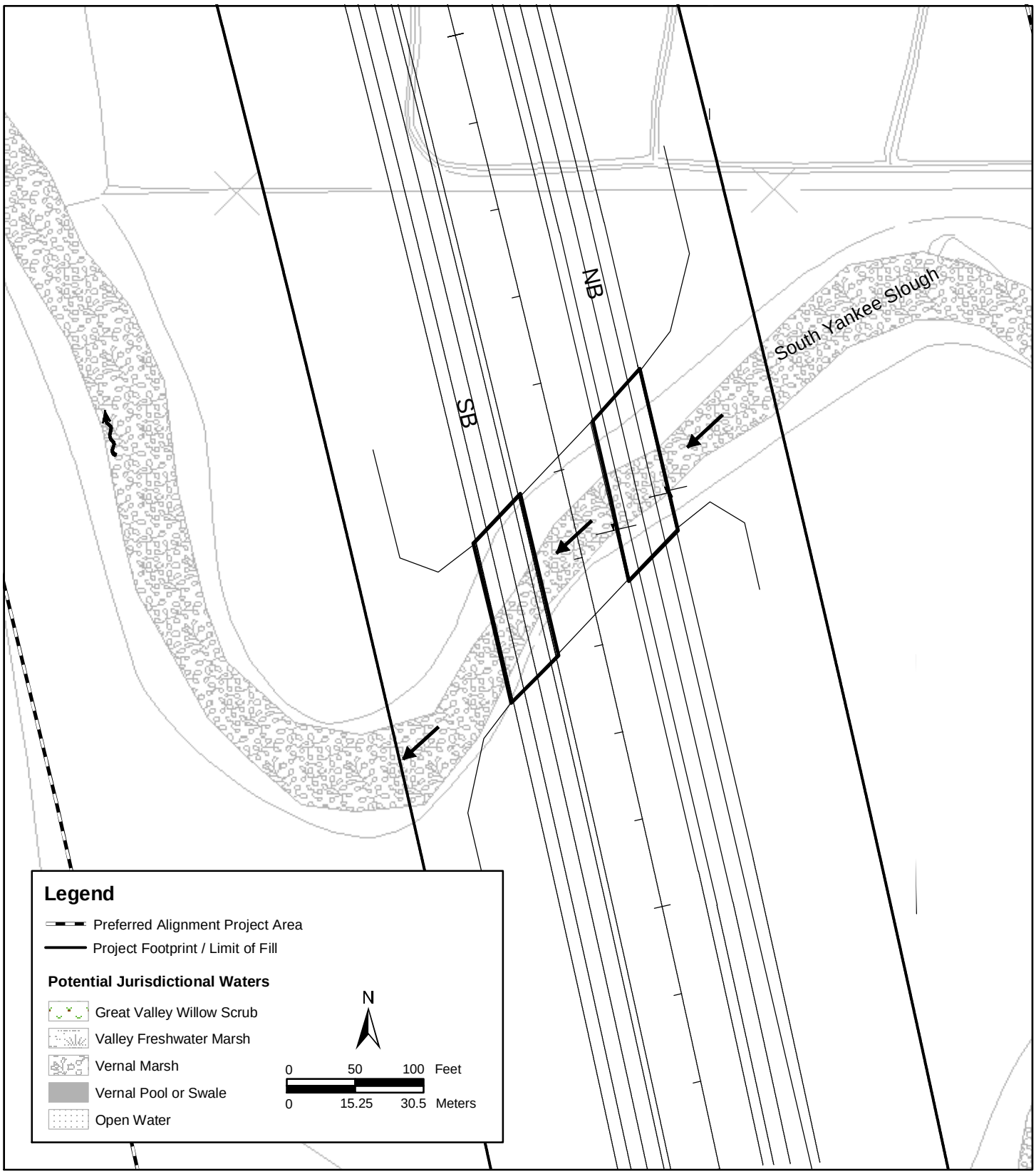

Figure 16 of 29

Caltrans

Route 65 Lincoln Bypass
Placer County, California
3-PLA-Route 65-KP R19.6 (PM R12.2) - KP R38.3 (PM 23.8)
EA Number 333800
South Yankee Slough - Bridge Layout

SOURCE: BASEMAP - CALTRANS, 2004
MAPPING/GIS - LSA

I:\CDT230F\GIS\ARCGIS\404_APP\FIG16-SY-SLOUGH_LAY.MXD (3/24/04)

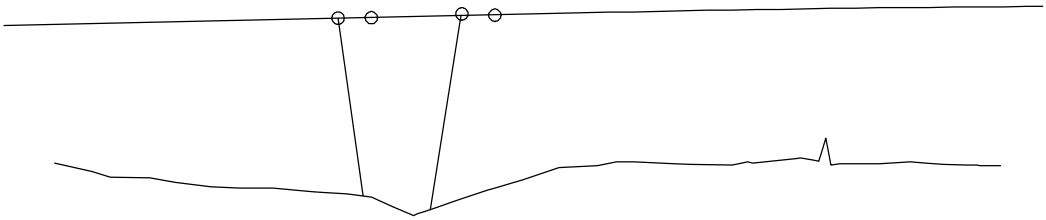

PROFILE

LOOKING DOWNSTREAM

0 100 200 Feet

0 30.5 61 Meters

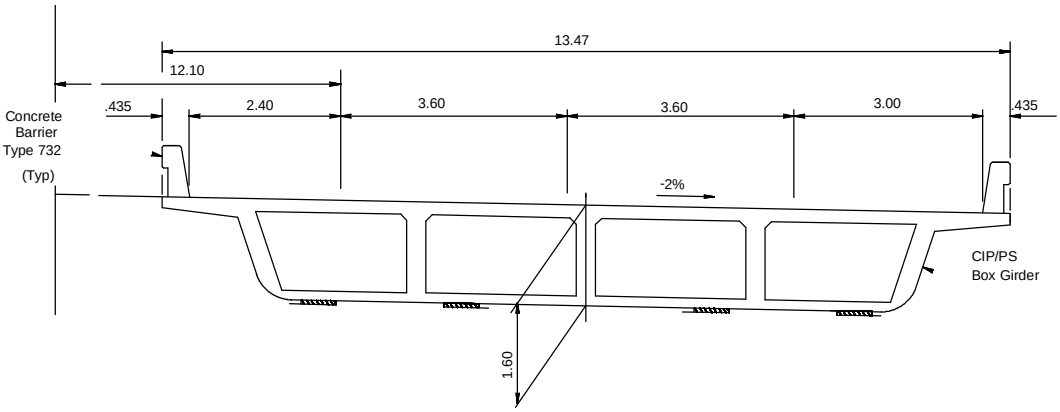

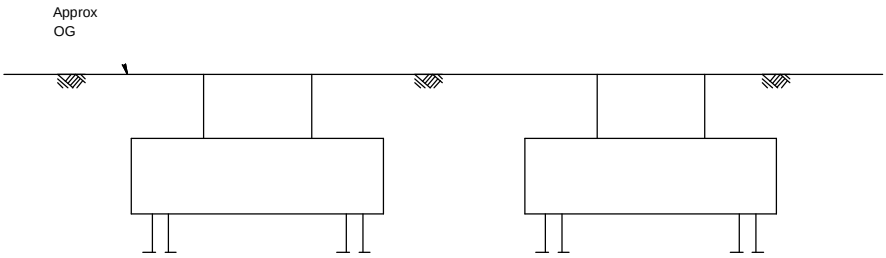

CROSS SECTION

0 5 10 Feet

0 1.5 3.0 Meters

Figure 17 of 29

Caltrans

Route 65 Lincoln Bypass
Placer County, California
3-PLA-Route 65-KP R19.6 (PM R12.2) - KP R38.3 (PM 23.8)
EA Number 333800
South Yankee Slough - Typical Bridge Sections

SOURCE: CALTRANS, 2004

I:\CDT230F\GIS\ARCGIS\404_APP\FIG17-SY-SLOUGH_SECT.MXD (3/18/04)

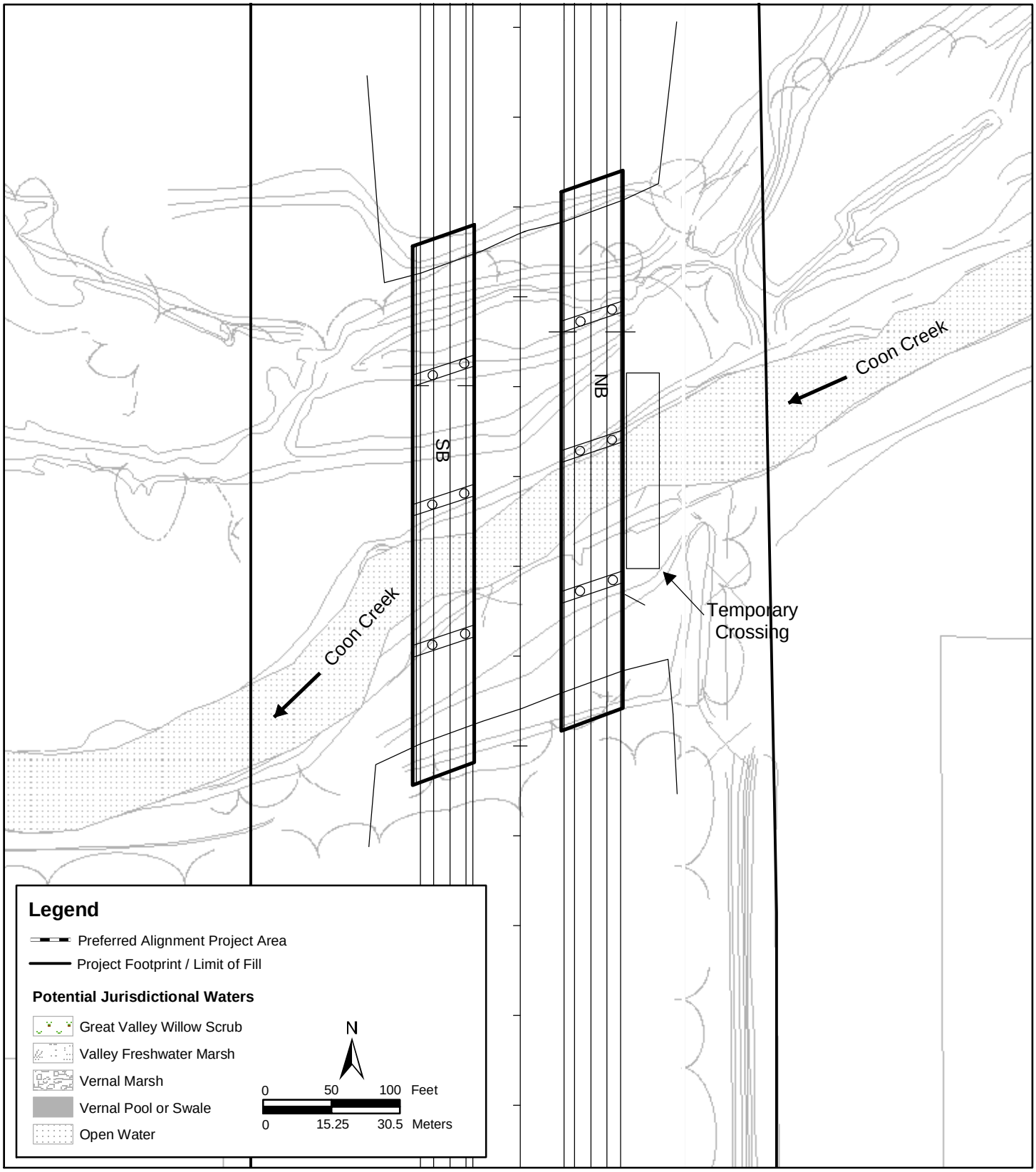

Figure 18 of 29

Caltrans

Route 65 Lincoln Bypass
Placer County, California
3-PLA-Route 65-KP R19.6 (PM R12.2) - KP R38.3 (PM 23.8)
EA Number 333800
Coon Creek - Bridge Layout

SOURCE: BASEMAP - CALTRANS, 2004
MAPPING/GIS - LSA

I:\CDT230F\GIS\ARCGIS\404_APP\FIG18-COON_LAY.MXD (3/23/04)

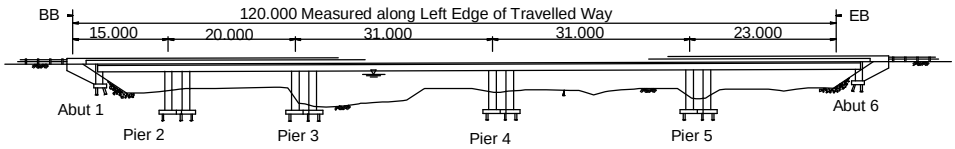

PROFILE

LOOKING DOWNSTREAM

0 50 100 Feet

0 15.25 30.5 Meters

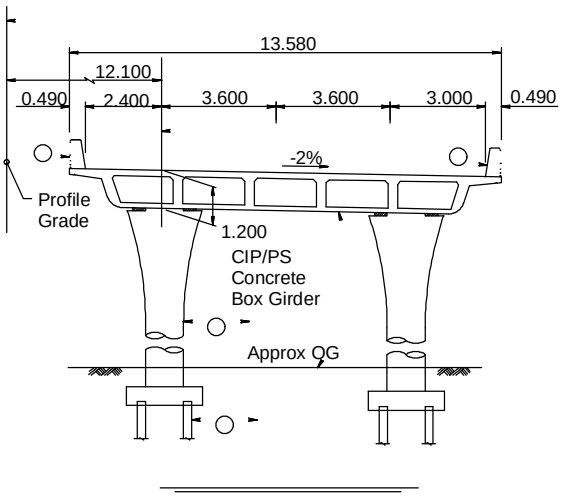

CROSS SECTION

0 10 20 Feet

0 3.05 6.1 Meters

Route 65 Lincoln Bypass
Placer County, California
3-PLA-Route 65-KP R19.6 (PM R12.2) - KP R38.3 (PM 23.8)
EA Number 333800
Coon Creek - Typical Bridge Sections

SOURCE: CALTRANS, 2004

I:\CDT230F\GIS\ARCGIS\404_APP\FIG19-COON_SECT.MXD (3/26/04)

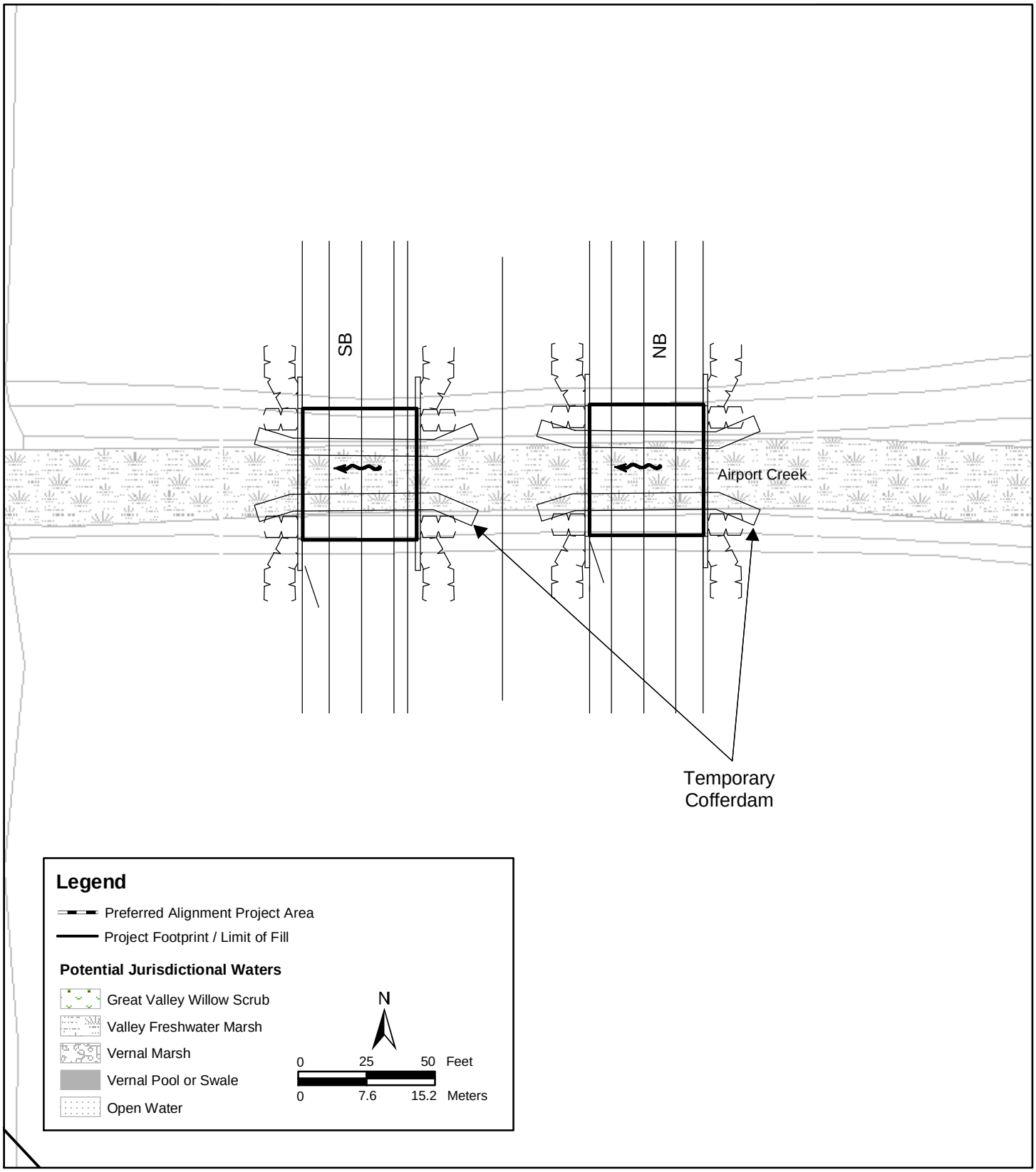

Figure 20 of 29

Route 65 Lincoln Bypass
Placer County, California
3-PLA-Route 65-KP R19.6 (PM R12.2) - KP R38.3 (PM 23.8)
EA Number 333800
Airport Creek - Bridge Layout

SOURCE: BASEMAP - CALTRANS, 2004
MAPPING/GIS - LSA

I:\CDT230F\GIS\ARCGIS\404_APP\FIG20-AIRPORT_LAY.MXD (3/29/04)

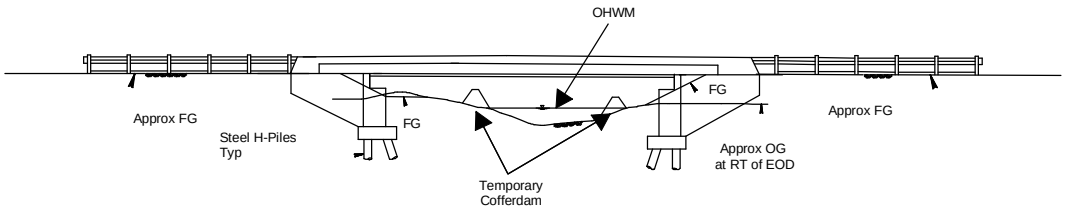

PROFILE

LOOKING DOWNSTREAM

0 10 20 Feet

0 3.0 6.1 Meters

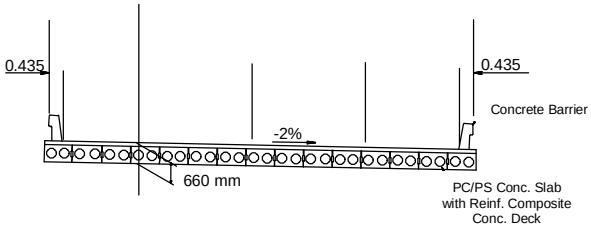

CROSS SECTION

0 10 20 Feet

0 3.0 6.1 Meters

Route 65 Lincoln Bypass
Placer County, California
3-PLA-Route 65-KP R19.6 (PM R12.2) - KP R38.3 (PM 23.8)
EA Number 333800
Airport Creek - Typical Bridge Sections

SOURCE: CALTRANS, 2004

I:\CDT230F\GIS\ARCGIS\404_APP\FIG21-AIRPORT_SECT.MXD (3/29/04)

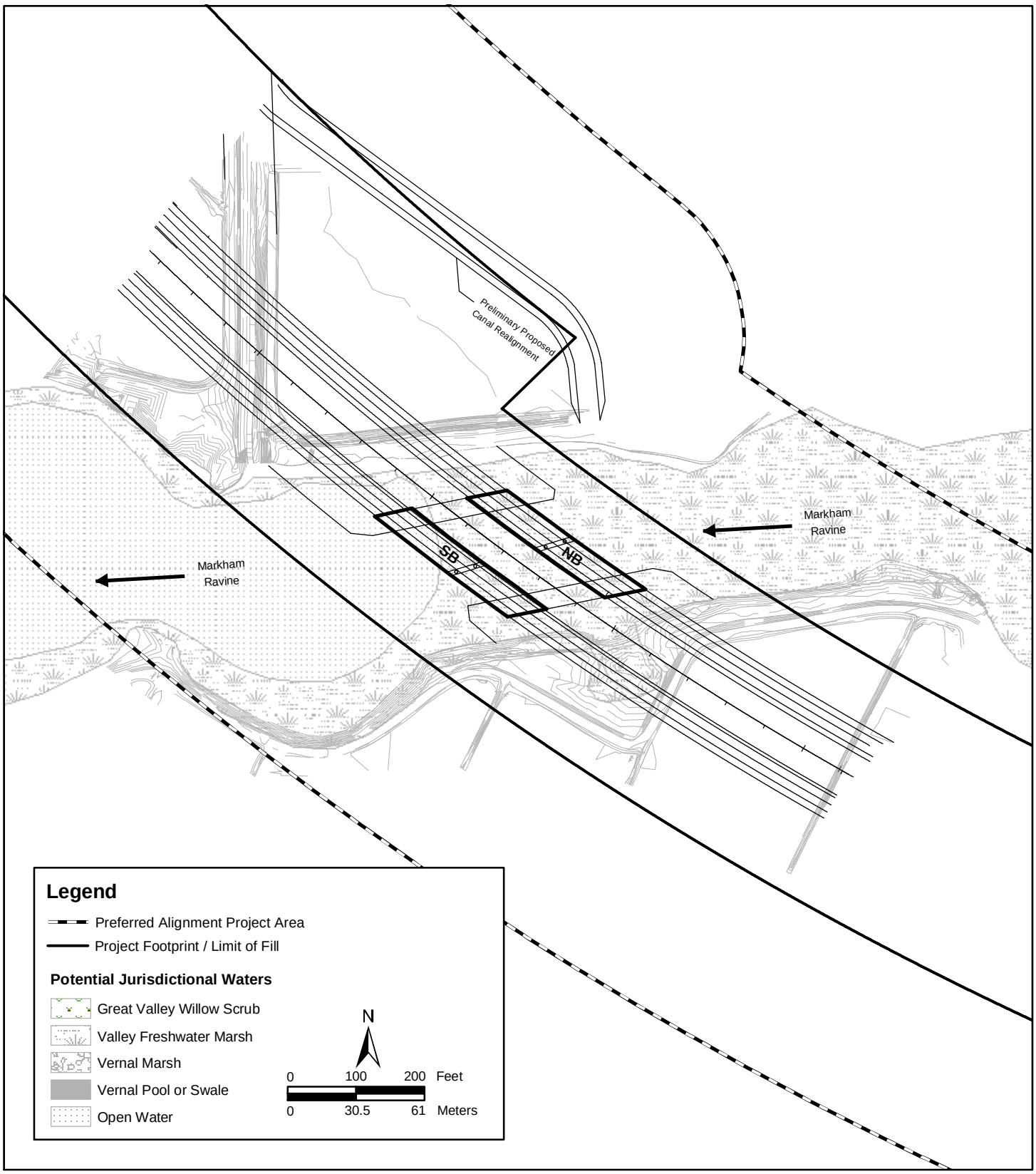

Figure 22 of 29

Caltrans

Route 65 Lincoln Bypass
Placer County, California
3-PLA-Route 65-KP R19.6 (PM R12.2) - KP R38.3 (PM 23.8)
EA Number 333800
Markham Ravine - Bridge Layout

SOURCE: BASEMAP - CALTRANS, 2004
MAPPING/GIS - LSA

I:\CDT230F\GIS\ARCGIS\404_APP\FIG22-MARKHAM_LAY.MXD (3/25/04)

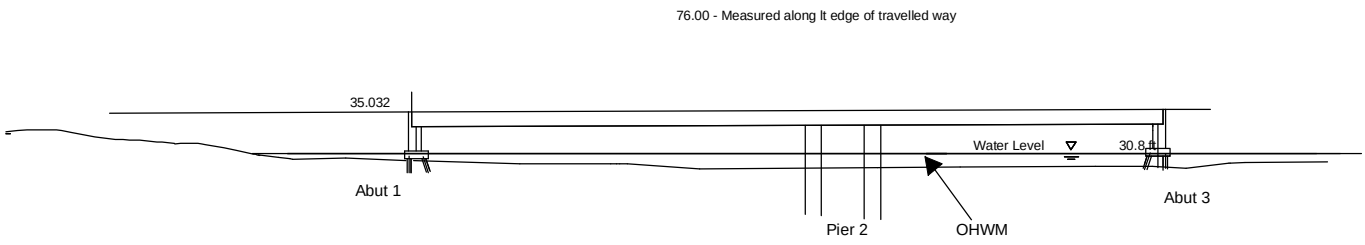

PROFILE

LOOKING DOWNSTREAM

0 30 60 Feet

0 9.1 18.3 Meters

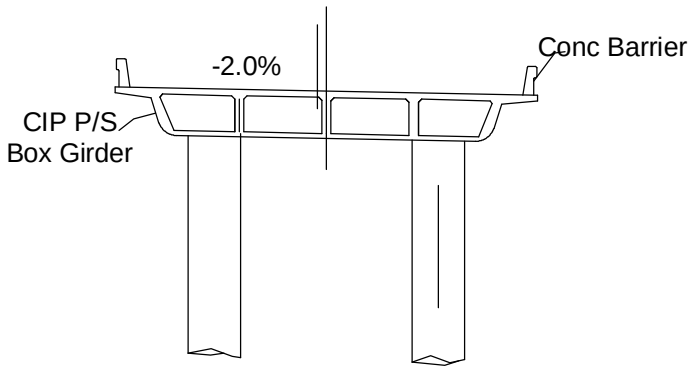

CROSS SECTION

0 10 20 Feet

0 3.05 6.1 Meters

Figure 23 of 29

Route 65 Lincoln Bypass
Placer County, California
3-PLA-Route 65-KP R19.6 (PM R12.2) - KP R38.3 (PM 23.8)
EA Number 333800
Markham Ravine - Typical Bridge Sections

SOURCE: CALTRANS, 2004

I:\CDT230F\GIS\ARCGIS\404_APP\MARKHAM_SECT.MXD (3/25/04)

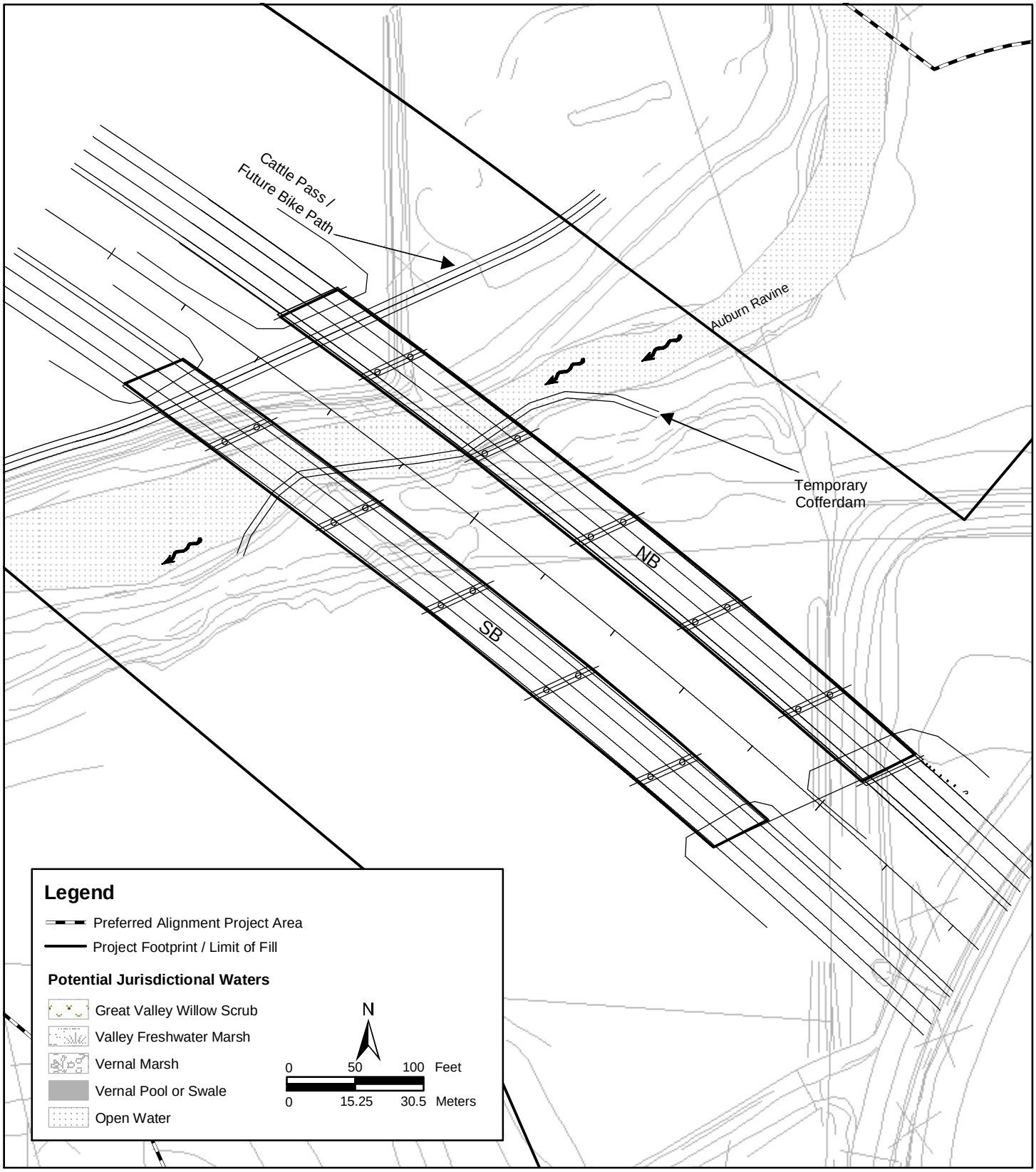

Figure 24 of 29

Caltrans

Route 65 Lincoln Bypass
Placer County, California
3-PLA-Route 65-KP R19.6 (PM R12.2) - KP R38.3 (PM 23.8)
EA Number 333800
Auburn Ravine - Bridge Layout

SOURCE: BASEMAP - CALTRANS, 2004
MAPPING/GIS - LSA

I:\CDT230F\GIS\ARCGIS\404_APP\FIG24-AUBURN_LAY.MXD (3/29/04)

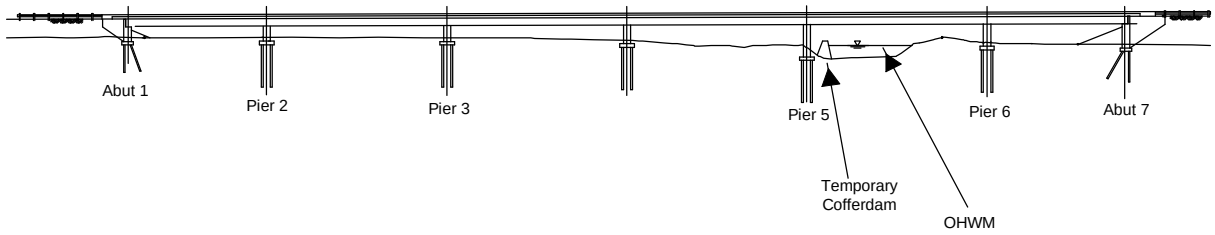

PROFILE

LOOKING DOWNSTREAM

0 50 100 Feet

0 15.25 30.5 Meters

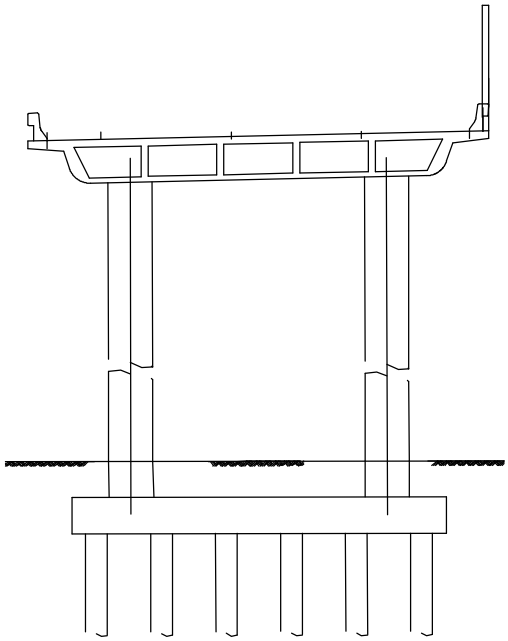

CROSS SECTION

0 10 20 Feet

0 3.0 6.1 Meters

Figure 25 of 29

Route 65 Lincoln Bypass
Placer County, California
3-PLA-Route 65-KP R19.6 (PM R12.2) - KP R38.3 (PM 23.8)
EA Number 333800
Auburn Ravine - Typical Bridge Sections

SOURCE: CALTRANS, 2004

I:\CDT230F\GIS\ARCGIS\404_APP\FIG25-AUBURN_SECT.MXD (3/29/04)

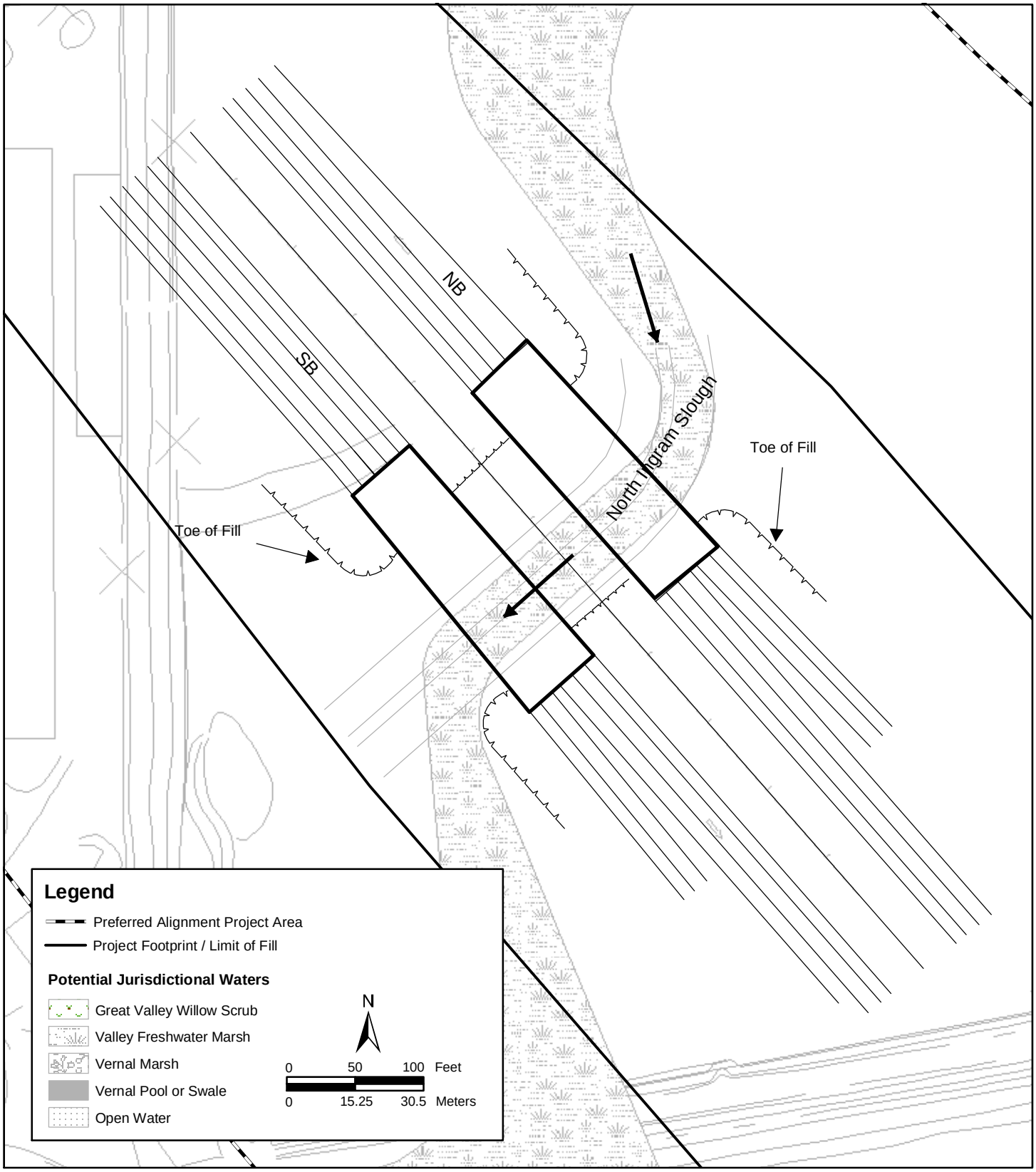

Figure 26 of 29

Caltrans

Route 65 Lincoln Bypass
Placer County, California
3-PLA-Route 65-KP R19.6 (PM R12.2) - KP R38.3 (PM 23.8)
EA Number 333800
North Ingram Slough - Bridge Layout

SOURCE: BASEMAP - CALTRANS, 2004
MAPPING/GIS - LSA

I:\CDT230F\GIS\ARCGIS\404_APP\FIG26-N_INGRAM_LAY.MXD (3/26/04)

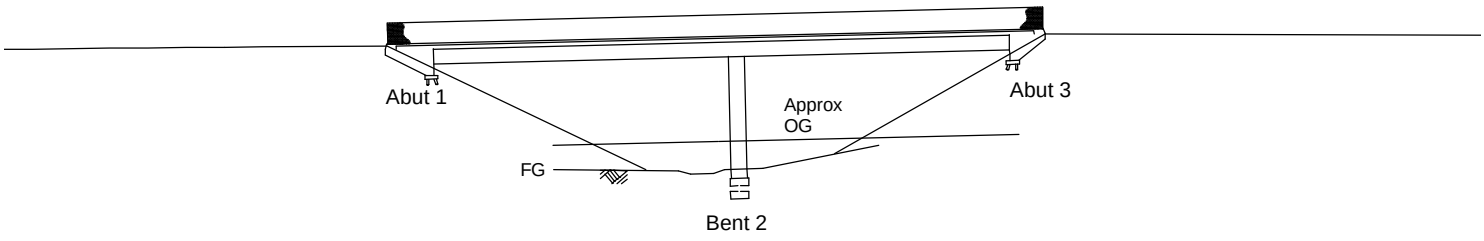

PROFILE

LOOKING DOWNSTREAM

0 30 60 Feet

0 9.1 18.3 Meters

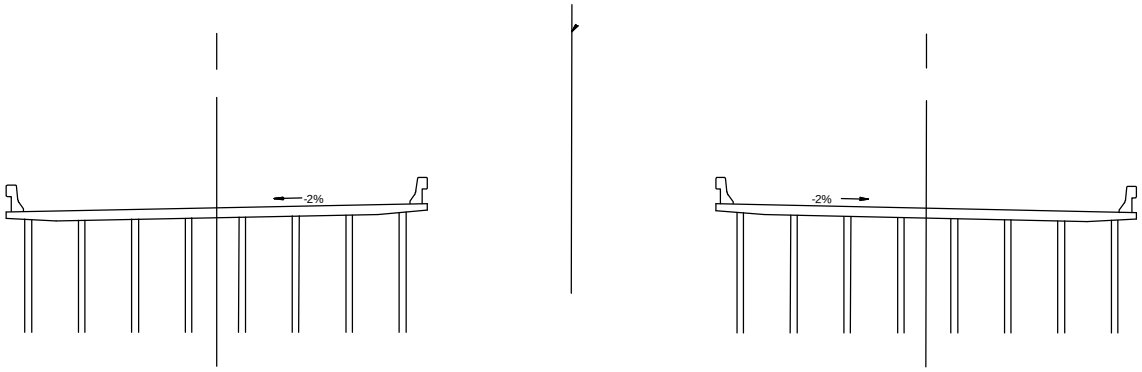

Southbound

Northbound

CROSS SECTION

0 12.5 25 Feet

0 3.8 7.6 Meters

Figure 27 of 29

Caltrans

Route 65 Lincoln Bypass
Placer County, California
3-PLA-Route 65-KP R19.6 (PM R12.2) - KP R38.3 (PM 23.8)
EA Number 333800
North Ingram Slough - Typical Bridge Sections

SOURCE: CALTRANS, 2004

I:\CDT230F\GIS\ARCGIS\404_APP\FIG27-N_INGRAM-SLOUGH_SECT.MXD (3/29/04)

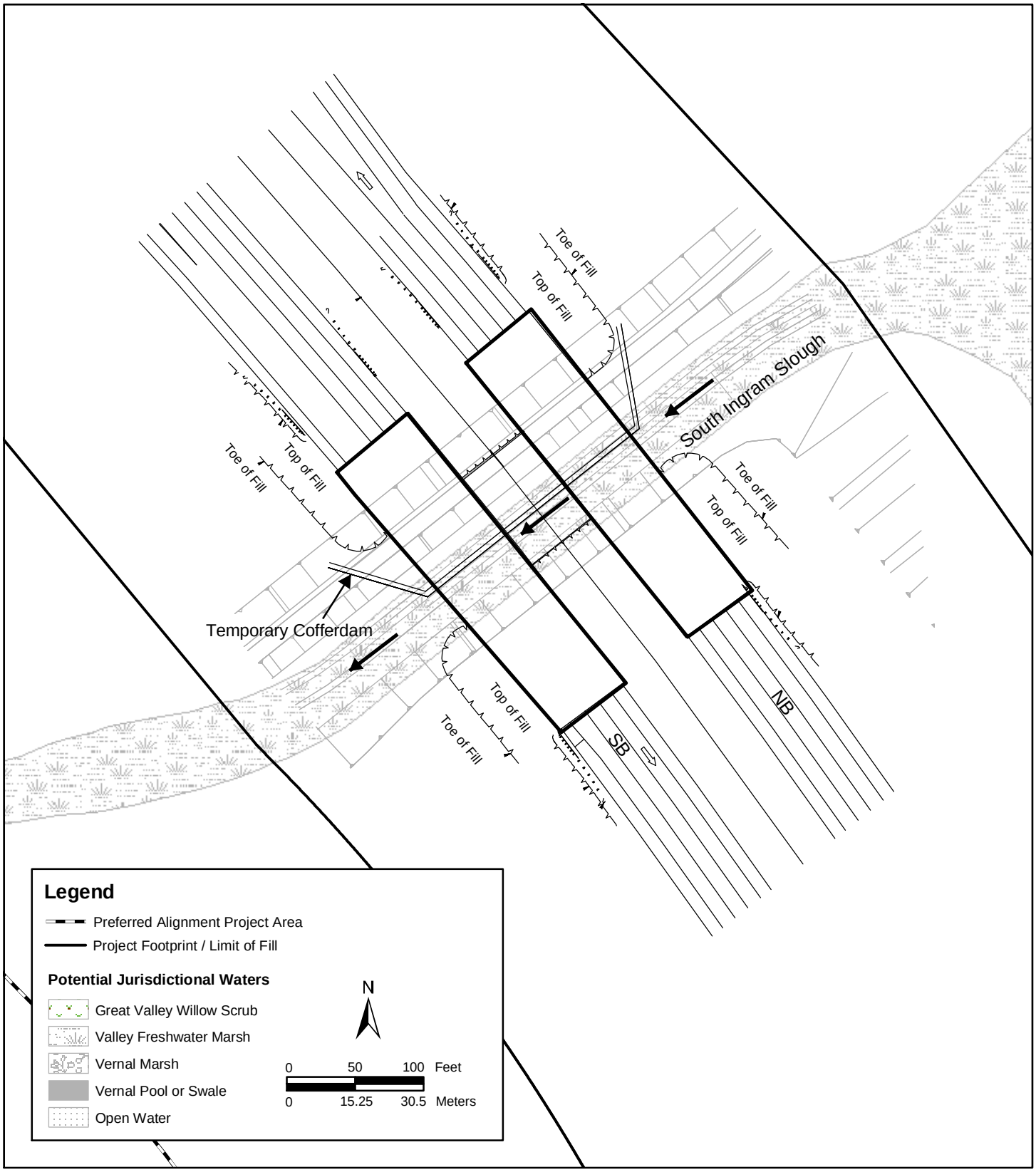

Figure 28 of 29

Caltrans

Route 65 Lincoln Bypass
Placer County, California
3-PLA-Route 65-KP R19.6 (PM R12.2) - KP R38.3 (PM 23.8)
EA Number 333800
South Ingram Slough - Bridge Layout

SOURCE: BASEMAP - CALTRANS, 2004
MAPPING/GIS - LSA

I:\CDT230F\GIS\ARCGIS\404_APP\FIG28-S_INGRAM_LAY.MXD (3/25/04)

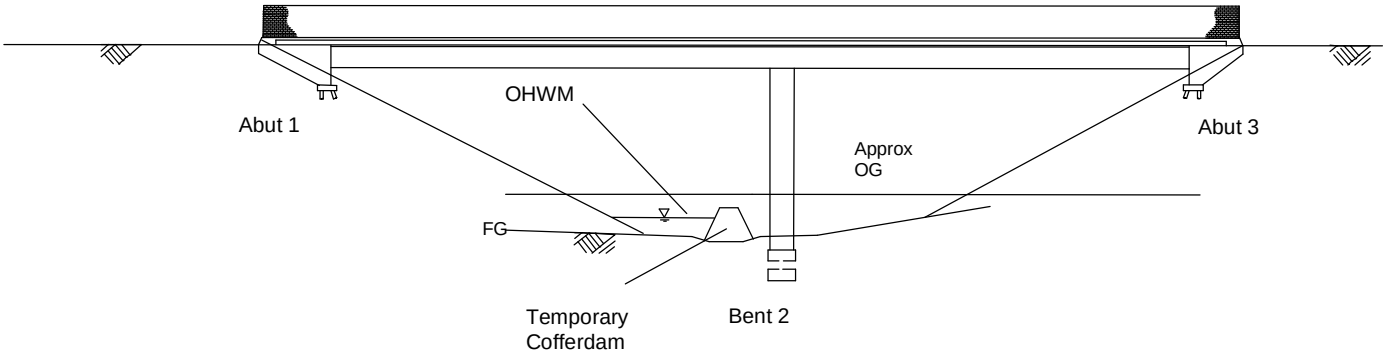

PROFILE

LOOKING DOWNSTREAM

0 25 50 Feet

0 7.6 15.2 Meters

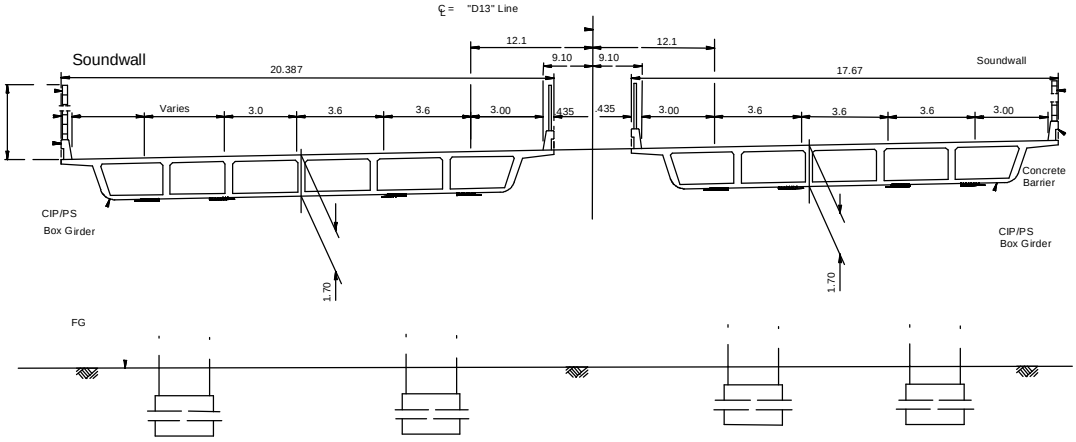

CROSS SECTION

0 12.5 25 Feet

0 3.8 7.6 Meters

Route 65 Lincoln Bypass
Placer County, California
3-PLA-Route 65-KP R19.6 (PM R12.2) - KP R38.3 (PM 23.8)
EA Number 333800
South Ingram Slough - Typical Bridge Sections

SOURCE: CALTRANS, 2004

I:\CDT230F\GIS\ARCGIS\404_APP\FIG29-S_INGRAM-SLOUGH_SECT.MXD (3/26/04)