# Chapter 3D. Affected Environment and Environmental Consequences - Flood Control

# Chapter 3D. Affected Environment and Environmental Consequences - Flood Control

## SUMMARY

*This chapter describes flood control features of the DW project alternatives and identifies impacts of the alternatives on levee reliability and flood control on the DW project islands. Key flood control issues discussed are reliability of interior and exterior levees around the DW project islands, seepage impacts on neighboring islands, and effects of wind and wave erosion on levees.*

*Delta Wetlands proposed features and programs as part of Alternatives 1, 2, and 3 to minimize potential impacts on levee stability and seepage. The 1995 DEIR/EIS concluded that incorporation of those programs would reduce flood control impacts to less-than-significant levels. However, a new geotechnical evaluation of the proposed levee design and seepage-control system was performed for the 2000 REIR/EIS. This evaluation identifies the following as significant impacts:*

- *a potential decrease in long-term levee stability on the DW reservoir islands, and*
- *a potential increase in seepage on adjacent islands resulting from project operations.*

*Mitigation is proposed to reduce both impacts to a less-than-significant level. In addition, the following impacts are identified as less than significant:*

- *a potential decrease in levee stability on the DW project islands during or immediately after project construction,*
- *potential property damage resulting from levee failure, and*
- *cumulative effects on Delta flood hazards.*

*Because the rate of subsidence would increase under the No-Project Alternative, levee stability would decline over time and the potential for seepage and for levee failure during seismic activity would increase. The cumulative risk of levee failure would increase under the No-Project Alternative. The perimeter levees could be substantially buttressed and improved to increase long-term levee stability.*

## CHANGES MADE TO THIS CHAPTER FOR THE FINAL ENVIRONMENTAL IMPACT STATEMENT

The analysis of DW project effects on levee stability and seepage was updated in the 2000 REIR/EIS. This chapter consists of the 1995 analysis of project effects on flood control followed by the updated analysis of project effects on levee stability and seepage. Additionally, minor text changes were made to update information in response to comments received on the 1995 DEIR/EIS and 2000 REIR/EIS, and some impact discussions from the 1995 DEIR/EIS were revised to reflect the updated conclusions about these impacts in the 2000 REIR/EIS analysis.

## INTRODUCTION

This chapter assesses potential impacts of the DW project alternatives on DW island levee reliability and flood control in the Delta. The discussion in this chapter includes several terms that may not be familiar to all readers. The following are definitions of key terms as they are used in this EIR/EIS:

# **Buttress**. An exterior pier, often sloped, used to steady a structure by providing greater resistance to lateral forces to prevent buckling. See also "toe berm".

# **Toe berm**. The section projecting at the base of a dam, levee, or retaining wall.

# **Levee crest**. The top of a levee.

# **Borrow area**. An excavated area or pit created by the removal of earth material to be used as fill in a different location.

# **Subsidence**. A local or regional sinking of the ground. In the Delta, this results primarily from peat soil being converted into gas.

# **Settlement**. The sinking of surface material as a result of compaction of soils or sediment caused by an increase in the weight of overlying deposits or by pressure resulting from earth movements.

# **Seismicity**. The frequency, intensity, and distribution of earthquake activity in a given area.

# **Liquefaction**. The process in which soil loses cohesion when subject to seismic activity (i.e., shaking).

# **Seepage**. A slow movement of water through permeable soils caused by increases in the hydraulic head (see below).

# **Piezometer**. A sandpipe monitoring well used to measure the depth to the groundwater surface in the aquifer.

# **Hydraulic head**. The pressure created by water within a given volume.

# **Hydrostatic pressure**. The pressure of water at a given depth due to the weight of the fluid above it.

Additional definitions of terms are provided below in the section from the 2000 REIR/EIS entitled "Definition of Terms".

## AFFECTED ENVIRONMENT

This section describes levee and flood conditions on the DW project islands. Information for this section is based, in part, on information collected for the 1990 draft EIR/EIS. Where conditions have not changed, this information has been used. Descriptions of levee and flood conditions have been updated using more recent information from DWR; the Bay-Delta Oversight Council; and DW's geotechnical engineers, Harding Lawson Associates (HLA) and Hultgren Geotechnical Engineers, where appropriate.

### Sources of Information

Information on levees and flood control in the Delta and on the DW project islands was collected from reports by DWR, the Bay-Delta Oversight Council, and DW's engineering consultants. Local reclamation district engineers and consulting engineers were also contacted for further information. Appendix D1 is an annotated list of geotechnical reports prepared for the DW project and consulted for much of the information in this chapter.

### Delta Levee Stability

#### History of Delta Levees

Prior to reclamation for agriculture, the Delta was a tidally influenced marshland. Reclamation began in 1850 and involved the use of extensive levee systems, internal drainage networks, and pumps. In 1861, the California Legislature created a state commission to manage reclamation projects. In 1868, the responsibility for reclamation was given to landowners and their reclamation districts, and Delta island reclamation began on a large scale.

Between 1871 and 1879, most of the Delta islands were enclosed by levee systems. By the late 1870s,

steam-powered dredges were being used to build levees, and between 1880 and 1916, most of the Delta marshes were reclaimed (DWR 1982). By the mid-1940s, the Delta had been completely transformed from a tidal wetland to a series of channels separated by islands protected by levees.

**Delta Levee System**

The Delta levee system initially served to control island flooding. Today the levees are necessary to prevent inundation of island interiors during normal runoff and tidal cycles because island interiors have been lowered by extensive soil subsidence. Subsidence is the lowering of the interior land level primarily as a result of microbial decomposition, topsoil erosion, and oxidation of the islands' peat soils. Delta lands have historically subsided at rates that are among the highest in the world. The land surface of some Delta islands is subsiding at a rate of 2-3 inches per year (U.S. Soil Conservation Service [SCS] 1989). Levees that were originally built 2 or 3 feet above ground level must now be maintained, in many cases, at heights of over 20 feet above ground level as a result of interior island subsidence (DWR 1982, 1988; Bay-Delta Oversight Council 1993).

Before reclamation, the surface elevations of the Delta soils were approximately at sea level. Therefore, the difference between sea level and existing elevations of the island interiors represents the magnitude of subsidence that has taken place on each island since reclamation began. The lowest surface elevations of Bacon and Bouldin Islands and Holland and Webb Tracts are -20.3, -19.9, -17.9, and -20.5 feet relative to mean sea level, respectively (Northpoint Engineers 1988).

**Delta Levee Failure Mechanisms**

More than 100 Delta island levee failures have occurred since the early 1890s (DWR 1982). Figure 3D-1 shows the 15 Delta islands that have flooded since 1967. Levee failures occur as a consequence of overtopping or levee instability.

Overtopping occurs when the crest of the levee is lower than the water level. Overtopping can occur not only as a result of floodflows, but also as a consequence of high tides and wind (Bay-Delta Oversight Council 1993). Factors contributing to levee instability include seepage, settlement, erosion, subsidence, and seismicity. These factors are described below.

**Seepage**. Water seeping through or beneath levees contributes to erosion problems and subsequent levee instability. Sandy levees are especially susceptible to seepage erosion and the resulting formation of "pipes" (large voids) in the levee material. (Bay-Delta Oversight Council 1993). Regional and project-specific seepage conditions are described below.

Seepage of water from waterways or adjacent islands is a major concern of Delta land users. The amount of seepage that occurs is controlled by the permeability of soils, length of the seepage path, and height of the hydraulic head (i.e., the pressure created by water within a given volume). The problem is worsened in the Delta by the decline in the level of peat soils, which increases the hydraulic head between channel water surfaces and the islands, and by the presence of permeable subsurface sand layers. Seepage has been reported to increase after flooding of an adjacent island and to cease after the flooded island has been drained (DWR 1982, HLA 1989).

Under existing conditions, seepage fluctuates with exterior channel water levels; dredging episodes in exterior channels; and variations in farming practices, such as weed control, flooding adjacent to levees, or lowering of interior water levels. Seepage varies from island to island and within individual islands as a function of soil conditions and levee conditions. Site-specific information on groundwater conditions on the DW islands and neighboring islands was collected by Hultgren Geotechnical Engineers under contract to DW between 1989 and 1997 to give an indication of existing seepage through the aquifer. Results of groundwater monitoring to date have been published in three reports (see Appendix D1, "Annotated List of Geotechnical Reports Prepared for the Delta Wetlands Project").

Water seeps onto Delta islands by two primary routes: high seepage passes through or immediately beneath levee embankments, and deep seepage passes through permeable materials below the peat that underlies most levee embankments. High seepage is not transmitted from flooded islands to adjacent islands and is addressed by individual reclamation districts as it occurs. Subsurface sand layers provide the primary conduits for deep seepage. These layers may permit the seepage to travel from a flooded island to an adjacent island. If clay is present under channels between islands, or if it overlies sand layers, the

permeability of the seepage path and resultant seepage are greatly reduced.

**Settlement**. The construction of Delta levees over soft foundation materials has caused ongoing consolidation of levee material and levee settlement. Delta islands are subject to levee cracking, seepage, and instability of varying degrees because of differential settlement and the composition of the levee soils. The levees are raised periodically to compensate for settlement. The process of raising levees increases the load on the underlying materials, causing more settlement, and the cycle repeats itself. Levees commonly settle at various rates, which depend on factors such as the nature of underlying material and the length of time since the levee crest was last raised with additional fill (HLA 1989).

**Wind and Wave Erosion**. Levee exterior (waterside) slopes are subject to varying erosional effects of channel flows, tidal action (which can cause water levels in some channels to vary by as much as 4 feet daily), wind-generated waves, and boat wakes. To counter erosion, riprap (rock) may be placed on a levee, or a berm may be placed as a buffer in front of the levee. Although vegetation can contribute to piping problems, it is generally desirable as another tool in controlling erosion. (Bay-Delta Oversight Council 1993.)

**Subsidence**. Subsidence (i.e., lowering of the land surface) results primarily from peat soil being converted into a gas. Many Delta islands are composed of peat soils that decompose when exposed to oxygen and higher temperatures, a process that is accelerated by agricultural activity (Bay-Delta Oversight Council 1993).

**Seismicity**. Faults are considered active if they have moved at least once during the last 11,000 years. Active faults that have the potential to produce earthquake effects on Delta levees exist (DWR 1982). None of the Delta levee failures are known to have been the direct result of an earthquake. However, an earthquake could potentially cause levee failures through lateral deformation, settlement, or liquefaction because Delta levees are founded on sand, silt, clay, and peat that, when saturated, generally lose strength under seismic acceleration.

The height differential between the top of existing levees and island interior bottoms is gradually increasing because of subsidence. This growing differential increases levee vulnerability to earthquake effects because hydrostatic pressure (i.e., the pressure of water at a given depth due to the weight of the fluid above it) becomes greater relative to the resisting forces of the levees and foundation soils.

DWR has an emergency plan to protect Delta water supplies in the event that levees are damaged by an earthquake. The plan calls for cessation of pumping in the south Delta, release of water from upstream reservoirs, use of Clifton Court Forebay as a temporary supply, and rapid repair of damaged levees (Argent 1988).

**DW Project Islands**

**Levee Failure**. Since 1932, two DW project islands, Holland and Webb Tracts, have flooded as a result of levee overtopping or stability failure. Using levee data from 1974, the Corps calculated the statistical frequency of levee failure resulting from overtopping or levee instability on Delta islands, based on the assumption that no major rehabilitation work would be done (Table 3D-1). The Corps predicted that Bouldin Island would experience levee failure more than 18 times in 100 years, or an average of once every 5.5 years under existing conditions. The Corps predicted that levees on Bacon Island, Holland Tract, and Webb Tract would fail once every 11-24 years under existing conditions. (DWR 1982.)

**Seepage**. The DW project islands and adjacent islands experience seepage problems of varying degrees under existing conditions. Existing levees will continue to have at least some high seepage caused by the high hydraulic heads between exterior water surfaces and interior island bottoms. Site-specific data on seepage in the DW project area indicate that water levels in sand aquifers are within a few feet of the interior elevations of the islands (HLA 1992a).

Current agricultural land use practices (see Chapter 3I, "Land Use and Agriculture") on many Delta islands lower groundwater levels and accelerate subsidence in peat material at or near the island surfaces. Because of continued subsidence, associated increases in levee heights, and corresponding hydrostatic pressures, seepage is expected to increase over time in the DW project island interiors under existing conditions.

HLA, under contract to DW, issued questionnaires pertaining to seepage on Delta islands to reclamation engineers in 1988. Although most of the information collected was not specific, results indicated that all

islands adjacent to DW project islands have some problem with seepage, subsidence, or ground settlement. District engineers reported no seepage on many islands after flooding events on adjacent islands. However, some islands have reported increases in seepage after such flooding (HLA 1991, Holmes pers. comm.).

Hultgren Geotechnical Engineers collected baseline groundwater data from 34 piezometers between 1989 and 1997 on islands adjacent to the DW islands. As seepage through the deep aquifer increases and decreases, groundwater levels within the aquifer will rise and fall accordingly. Thus, measuring preproject and during-project groundwater levels provides the most reliable indicator of changes in seepage through the aquifer (see Appendix D1 for an annotated bibliography of geotechnical reports prepared for the DW project from 1989 through 1994).

**Settlement**. Typical levees on Delta islands consist of a layer of fill, about 10 feet thick, composed mostly of sand with some peat and clay. The fill is underlain by peat and soft clay, which in turn is typically underlain by sand, silt, and clay (HLA 1989). The peat and soft clay foundation materials are highly compressible and create continual settlement problems for Delta island levees, including the proposed project levees.

**Wind and Wave Erosion**. The DW project islands are subject to varying erosional effects from wind-generated waves, channel flows, and tidal action. Exterior levee slopes on the DW project islands are constructed with erosion control material (e.g., riprap) to counter wind and wave erosion.

**Subsidence**. If current DW agricultural practices continue, the surfaces of the DW islands will decline roughly 6-10 feet over the next 50 years, assuming peat layers are at least 10 feet thick (HLA 1989). Table 3D-2 shows DWR's (1982) estimates of projected island bottom subsidence in 50 years. Island bottom elevations below sea level are predicted to subside 16-18 feet between 1982 and 2032. If the existing levees are maintained and built to greater heights to compensate for the subsidence, hydrostatic pressures on the DW project levees would increase and greatly increase the risk of seepage and levee failure.

**Seismicity**. No active faults are known to pass beneath the DW project islands, although the islands are within the zones of influence of several active faults. The major active fault systems and their distances west of Webb Tract are the Concord-Green Valley (22 miles), Calaveras (27 miles), Hayward (37 miles), Rodgers Creek (43 miles), San Andreas (54 miles), and Vacaville/ Winters (26 miles) fault systems (HLA 1989). The Midland fault passes near the western edges of Holland and Webb Tracts but is not considered to be active (DWR 1982).

## Flood Control System

### Existing System in the Delta

Levee systems throughout the Delta are either federal "project levees" or "nonproject levees". Project levees within the Delta are maintained to federal Corps standards by the State of California or by local landowners under state supervision. Nonproject levees are defined as levees constructed and maintained by local landowners and reclamation districts and constitute about 65% of levees in the Delta flood control system (DWR 1982). Federal and state agencies have no jurisdiction over nonproject levees and cannot require maintenance of these levees. Maintenance of nonproject levees is largely financed by landowners to widely ranging and less stringent standards than are applied to project levees.

Nonproject levees are maintained, repaired, and upgraded by local reclamation districts according to the state's Flood Hazard Mitigation Plan for the Delta. The Delta Flood Protection Act of 1988 increased the financial assistance to Delta reclamation districts responsible for maintaining nonproject levees. The Delta Flood Protection Act of 1988 authorized $12 million annually between fiscal years 1988–1989 and 1998–1999, with the money to be split between supplementing local revenues and funding special levee projects in the western Delta and flood protection for Walnut Grove and Thornton. The Delta Flood Protection Act also focused on protecting and enhancing the fish, plant, and wildlife resources of the Delta. Under the Delta Flood Protection Act, no project receiving funding from the act can result in a net long-term loss of riparian, fishery, or wildlife habitat, and a DFG finding to that effect must be issued before funds are disbursed.

### Financing of the Levee System

Costs of maintaining and repairing the levee system in the Delta are substantial (DWR 1982, 1993). State and local governments have invested millions of

dollars in the past 10 years to maintain and repair eroded levees. In some instances, the expenditures exceeded the appraised value of the island or tract being protected. The average annual cost of levee maintenance on nonproject levees in the Delta ranged from $3,000 to $165,000 per levee mile, averaging $11,800 per levee mile between 1981 and 1991 (DWR 1993).

Beginning in 1988, state cost-sharing was increased to 75% of costs exceeding $1,000 per mile under the Delta Levee Rehabilitation Act of 1988. Under the 75% cost-share proportion established by the Delta Levee Rehabilitation Act, the state cost could increase to approximately $170,000 per year, or $8.5 million over 50 years if projected based on experience from 1981-1991. This cost is approximately twice current costs.

The Delta Flood Protection Act provided $60 million over a 10-year period to control subsidence and rehabilitate levees on eight western Delta islands. Subsidence makes levees more difficult to maintain because of greater hydrostatic pressure and is most directly controlled through elimination of agricultural cultivation of peat soils. (DWR 1988.)

### Local Reclamation Districts

Landowners throughout the Delta, including those on the DW project islands, have organized into local reclamation districts to reclaim and protect lands from overflow. Generally, each landowner has one vote per $1 of assessed value of taxable land and improvements. Typically, each district is governed by a board of three trustees. The districts finance levee maintenance work by assessments on protected landowners.

### Flood Control System for the DW Project Islands

**Existing System**. The four DW project islands are completely bounded by nonproject levees. On Webb Tract, the nonproject levee along the San Joaquin River on the north side of the island borders the Stockton ship channel and is classified as a "direct agreement" levee. The Port of Stockton has assured the federal government that this and other direct agreement levees will be maintained. The federal government will repair damage to this levee resulting from wave wash from large ships (DWR 1982).

**Financing**. During 1980-1986, over $36 million of federal, state, and local reclamation district money was spent on emergency levee repairs on the DW project islands (Table 3D-3). Approximately 85% of this money was spent on Holland and Webb Tracts, where major levee breaks occurred in 1980. During 1981-1986, $1,362,000 was spent on levee maintenance work on the four DW project islands (Table 3D-3). Approximately 40% of this maintenance cost was reimbursed by the state under the Delta Levee Maintenance Subventions Program. During this period, up to 50% of maintenance costs exceeding $1,000 per mile of nonproject levees was reimbursable under the subventions program.

Emergency repair and maintenance costs for nonproject levees on the DW project islands totaled about $37 million over the periods shown in Table 3D-3. Of this total, approximately 95% was state or federal public money; only about 5% was raised by reclamation districts through assessments of landowners within their jurisdiction. As part of the Delta Flood Protection Act West Delta Islands Program to meet the water quality objectives for the Delta, Holland and Webb Tracts can receive funding for subsidence control and levee rehabilitation.

#### Local Reclamation Districts

**Bacon Island**. Levees on Bacon Island are maintained by Reclamation District No. 2028. The reclamation district engineer inspects the island levees in spring and fall or when levee problems are reported by the local landowners. The district engineer generally specifies, supervises, and coordinates any required levee repair or rehabilitation. Levee maintenance can be performed by the reclamation district at any time during the year and can include vegetation control, road maintenance, and the raising of levees that have subsided (Sinnock pers. comm.). The materials used for levee reconstruction on Bacon Island have been primarily dredged from adjoining channels.

The levees are maintained to reclamation district standards requiring top widths of 20 feet, exterior levee slopes of 2:1, and interior slopes of 4:1 (Sinnock pers. comm.). The minimum top width prescribed in DWR Bulletin 192-82 (DWR 1990) and Corps bulletins is 16 feet, but accepted practice in the Delta is to require 20-foot top widths to allow equipment maneuvers and car passage.

**Webb Tract**. Webb Tract levees are maintained by Reclamation District No. 2026. The levees are

inspected approximately twice each year by the reclamation district engineer or more often in response to local alert. The reclamation district engineer specifies, supervises, and coordinates levee rehabilitation work. The reclamation district and landowners maintain all levees, including those along the Stockton ship channel, where bank protection against wave wash is under federal jurisdiction (Kjeldsen pers. comm.). The materials used for levee reconstruction on Webb Tract were primarily dredged from adjoining channels. Borrow areas were developed on Webb Tract in 1990 and have since been used as the primary source of fill material to improve the levees. The levees are maintained to local reclamation district standards with top widths of 20 feet, exterior levee slopes of 2:1, and interior slopes of 4:1 (Sinnock pers. comm.).

Flood waters rushing through a levee breach on January 18, 1980, created the blowout pond on the east end of Webb Tract. The Corps emergency pumps were moved to Webb Tract after being removed from Holland Tract in May 1980. The Corps removed its emergency pumps and turned over the island to the local reclamation district in mid-December 1980; the district then began rehabilitating its own pumps for final drawdown. Water was not drawn down below the island bottom until February 1981 (Kjeldsen pers. comm.).

**Bouldin Island**. Bouldin Island levees are maintained by Reclamation District No. 756. The reclamation district engineer specifies, supervises, and coordinates any levee rehabilitation work and generally inspects the levees approximately three times each year. Materials used for levee reconstruction on Bouldin Island were a combination of dredged soils from adjoining channels and imported material from other sources. Borrow areas were developed on Bouldin Island in 1990 and have since been used as the primary source of fill material to improve the levees. Levees are maintained to local reclamation district standards of top widths of 20 feet, exterior levee slopes of 2:1, and interior slopes of 4:1. (Wright pers. comm.)

**Holland Tract**. Holland Tract levees are maintained by Reclamation District No. 2025 according to the same maintenance procedures and standards as those previously discussed for Bouldin Island. Materials used for levee reconstruction on Holland Tract were a combination of dredged soils from adjoining channels and imported material from other sources. (Wright pers. comm.) Borrow areas were developed on Holland Tract in 1990 and have since been used as the primary source of fill material to improve the levees.

The levee on the northern tip of Holland Tract breached on January 18, 1980. Flood waters scoured out the blowout pond now present at that location. The Corps installed emergency pumps after the breach; the pumps operated until April 25, 1980, when dismantling began. The surface water level was drawn down to the island bottom by May 5, 1980 (Wright pers. comm.).

## IMPACT ASSESSMENT METHODOLOGY

### Analytical Approach and Impact Mechanisms

Impacts on levee reliability and flood control reported in the 1995 DEIR/EIS were evaluated through comparison of the levee improvement design for the DW project alternatives with conditions studied, based primarily on results of the preliminary geotechnical investigations by DW's consultants, HLA (1989) and Moffatt & Nichol (1988).

The geotechnical studies included field investigations, monitoring, modeling, and levee stability analyses for the DW project islands. Potential effects on levee stability and the flood risk that could exist during project construction or operation were identified. HLA assisted DW in development of project design and operation measures that would reduce or eliminate those potential effects. DW incorporated these measures into design of the DW project alternatives. Therefore, the DW project includes measures that avoid or reduce significant impacts relative to flood control. Appendix D1 is an annotated bibliography of the geotechnical studies performed for this project.

The methods used to evaluate levee stability and seepage for the 2000 REIR/EIS are described below in the sections before the 1995 DEIR/EIS was prepared from the 2000 REIR/EIS entitled "Seepage Analysis Methodology" and "Methodology Used for the Levee Stability Analysis". Appendix H of the 2000 REIR/EIS provides more detailed information about the independent analysis of levee stability and seepage issues performed by URS Corporation (URS) for the 2000 REIR/EIS.

The impact analysis for flood control impacts is based on the preliminary levee design described below. The levee stability analysis assumed the maximum

levee cross section described below. Variation from the preliminary design may require supplemental levee stability analysis, and if results of the new analysis differ significantly from the existing results, supplemental environmental review may be required prior to final approval of the levee design.

There is a potential of some level of continuing subsidence on the DW project islands, even with the cessation of farming activities. As a result, the water storage capacity of the reservoir islands could increase in future years. The rate of subsidence, however, would be substantially less than under existing conditions. Reduced rates of subsidence and increased water storage capacity on the reservoir islands would not be expected to substantially increase or decrease levee stability analyzed in this chapter.

### Criteria for Determining Impact Significance

An alternative is considered to have a significant impact on flood control if it would:

- # decrease levee stability on the DW project islands during project construction,
- # induce additional seepage on adjacent islands when compared to no-project conditions,
- # substantially decrease regional supplies of levee material,
- # decrease long-term levee stability on the DW project islands below long-term stability under existing conditions, or
- # increase risk of cumulative levee failure and flooding in the project vicinity.

An alternative is considered to have a beneficial impact on flood control if it would increase long-term levee stability on the DW project islands or reduce the cumulative risk of levee failure in the project vicinity.

Additional criteria were included in the 2000 REIR/EIS analysis; see the section below entitled "Impact Assessment Methodology for the 2000 Revised Draft EIR/EIS".

## IMPACTS AND MITIGATION MEASURES OF ALTERNATIVE 1

Alternative 1 involves storage of water on Bacon Island and Webb Tract (reservoir islands) and management of Bouldin Island and Holland Tract (habitat islands) primarily for wetlands and wildlife habitat. The reservoir islands would be managed primarily for water storage, with wildlife habitat and recreation constituting secondary uses. The impacts of Alternative 1 on flood control in the project area are described below.

### Flood Control Features

#### Bacon Island and Webb Tract

The exterior levees of the DW reservoir islands, Bacon Island and Webb Tract, would be improved to bear the stresses and erosion potential of interior island water storage and drawdown. Water would be stored on the islands to a maximum elevation of 6 feet above sea level. This storage elevation is subject to a number of constraints, including, but not limited to, water availability, seepage monitoring, and DSOD regulations. The DW project's design, construction, monitoring, and maintenance measures to address flood control are detailed below.

**Levee Design**. Under Alternative 1, the exterior levees of the reservoir islands would be improved. A typical improved levee would have a 2:1 exterior (water-side) slope, a crest about 22 feet wide (including the thickness of erosion protection on the interior slope) at an elevation of about +9 feet, a 3:1 or steeper initial interior slope down to an elevation near -3 feet, and wide toe berms to buttress the levee. Alternatively, the interior slope may be inclined at about 5:1 and be without toe berms. Figure 3D-2 shows examples of potential initial levee improvements on levees with a 3:1 existing interior slope. The initial levee crest would be constructed approximately 8 feet wider than the long-term planned width (22 feet) to accommodate settlement and to allow for future levee raising. (HLA 1993.) The new slopes would meet or exceed criteria for Delta levees outlined in DWR Bulletin 192-82.

During final design, the range of existing conditions, including various existing slope inclinations and thickness of peat, would be checked. Each levee

section with a different soil condition or levee geometry may require a slightly different toe berm thickness and slope. During final design, consideration will be given to steepening the upper portion of the interior slopes to inclinations of between 2:1 and 2.5:1. A slightly steeper slope may reduce the amount of new fill required and limit both settlement and the potential for cracking.

**Erosion Protection in Levee Design**. The interior slopes of perimeter levees would be protected from erosion by conventional rock revetment similar to existing exterior slopes or other conventional systems, such as soil cement or a high-density polyethylene liner. The erosion protection would be sized to withstand design storms with a 50-year return period (Moffatt & Nichol 1988). There exists only a 2% chance of a 50-year severe wind event occurring in any year.

Moffatt & Nichol Engineers, in its September 1988 report to DW, gave a preliminary assessment of the effect of winds and waves on levees. For final levee design, DW would evaluate the expected waves along each section of the interior levees of the reservoir islands, considering fetch, angle of incidence, wind speed and duration, and depth of reservoir. Riprap or other suitable erosion protection measures would be sized for each section of interior levee slope based on these studies. In areas where final design studies indicate that wave splash and runup could potentially erode the levee crest if it is unprotected, the levee crest would be hardened or the erosion-protection facing would be extended up as a splash berm. Frequent monitoring of levee conditions conducted during and after the construction phase of the DW project is described below.

**Project Features to Control Seepage.** Interceptor wells would be installed in the exterior levees of the reservoir islands in those locations where substantial seepage to adjacent islands is predicted to occur (Figure 3D-3). The system would not be installed along noncritical sections of levee, such as the south side of Webb Tract bordering Franks Tract. The interceptor wells would be installed prior to diversions of water to the islands and filling of the reservoirs. As the reservoirs are filled, water would be pumped from the interceptor wells into the reservoirs. The interceptor wells would be pumped sufficiently to maintain the hydraulic heads at distances of 500-1,000 feet from the project island perimeters (i.e., beneath levees of adjacent islands) within existing conditions as determined by the results of background seepage monitoring described below. Relief wells and other alternative methods of seepage control may be substituted for or used to augment the interceptor well system during final design.

Because of the potential for increased seepage to adjacent islands, DW has undertaken an extensive program to document existing locations and amounts of seepage. DW, working with the Central Delta Water Agency, formed a Seepage Review Committee representing reclamation districts and their district engineers on islands surrounding the DW project islands. Committee members reviewed their records on historical seepage problem areas to suggest monitoring locations.

Identified purposes of the Seepage Review Committee are to:

- # provide a line of communication from DW to reclamation districts on adjacent islands and the Central Delta Water Agency through district engineers;
- # inform the reclamation district engineers about significant technical issues that could affect the adjacent islands; and
- # review and provide comments on DW's proposed plan and findings related to seepage issues to DW, reclamation districts, and the Central Delta Water Agency.

HLA, under contract to DW, designed and implemented a groundwater monitoring program to document preproject seepage patterns. By January 1992, 34 piezometers had been installed on 17 islands in the Delta (HLA 1992b). Hultgren Geotechnical Engineers continued to monitor 30 piezometers through 1997. Before the end of the monitoring period, two monitoring wells on Webb Tract were damaged beyond use, and two on McDonald Island were no longer monitored because they were influenced by a relief well demonstration project (described below) and were not believed representative of background conditions. Piezometers were installed vertically through levee crowns at boring depths ranging from 36 feet below ground surface to approximately 135 feet below ground surface. Water levels were measured weekly to monitor hydraulic head in the sand aquifer. To supplement weekly manual measurements, automated data acquisition devices were used continuously for 1-2 weeks in individual piezometers to record piezometric

conditions as affected by tides and flood stages (HLA 1992b).

Groundwater monitoring has shown that tidal fluctuations in nearby Delta channels affect groundwater levels in baseline piezometers. Daily groundwater fluctuations in individual piezometers range from 0.5 foot to 3 feet (HLA 1992b).

**Seepage Monitoring Program**. A seepage monitoring program would be implemented to provide early detection of seepage problems caused by the project. Seepage monitoring would use the piezometer readings on islands adjacent to the reservoir islands, infrared aerial photography, weir monitoring, visual inspection, and other methods as appropriate. The seepage monitoring program would quantify and document seepage impacts as the basis for appropriate mitigation and compensation measures. Diversions of water onto the DW project islands would continue only if seepage to adjacent and neighboring islands does not increase beyond existing conditions or if increases can be effectively mitigated.

**Piezometer Monitoring.** To monitor seepage caused by project operations, daily mean water levels for individual piezometers and groups of three or more piezometers on islands adjacent to DW project islands would be compared with seepage performance standards described below. The piezometers on neighboring islands are also referred to as "seepage monitoring wells". In addition to the 34 baseline piezometers, additional piezometers are proposed for locations 1 or more miles from perimeters of the DW project islands to determine variations in groundwater levels that are not attributable to the project (HLA 1992a). These additional piezometers are also referred to as "background monitoring wells".

Recommended locations of the proposed piezometers for Alternative 1 are shown in Figure 3D-3. A piezometer spacing of 1,500 feet to 2,000 feet on neighboring islands would closely monitor a continuous aquifer that underlies both a DW project island and a neighboring island. A minimum spacing of 1,000 feet would be used for critical seepage risk locations, and a maximum spacing of about 4,000 feet would be used in other areas. The spacing of monitoring piezometers will be influenced by the character of the underlying aquifer and the distance from the DW reservoir island.

Cooperation from neighboring reclamation districts and landowners would be needed for DW to install monitoring piezometers and periodically access them to download data from the devices. If, for some reason, an adjacent reclamation district or landowner would not allow piezometers to be placed over a long stretch of levee on their property, DW would place several piezometers on the DW reservoir island levees to monitor groundwater levels. Based on that information, DW would maintain the average groundwater level beneath the reservoir levee near historical levels.

Pressure transducers (instruments that detect fluid pressure and produce electrical signals related to the pressure) connected to electronic data loggers (to record the electronic signals) would be installed in each piezometer at least 1 year before the first project filling. The data loggers would be programmed to measure groundwater levels at least once per hour, and the readings would be averaged to compute a daily mean for each piezometer (HLA 1992a). Water level measurements taken concurrently in sloughs and rivers near the DW project islands also would be recorded.

**Seepage Performance Standards.** DW developed the following recommended performance standards to be used during filling and water storage periods to determine net increases in seepage caused by the DW project (HLA 1992a). The recommended seepage performance standards were approved by the Seepage Review Committee. The seepage performance standard for individual piezometers is 1 foot above two standard deviations of the previous year's background groundwater data for that location; the standard for a group of three or more piezometers is 0.25 foot above two standard deviations of the previous year's data for that group. These standards would be evaluated by comparison with data collected from background seepage monitoring activities. Using this comparison, net seepage increases caused by the project could be detected within approximately 1 week (Hultgren pers. comm.).

Hypothetical patterns of seepage relative to performance standards for individual piezometers are presented graphically in Figure 3D-4. This figure illustrates three scenarios: no seepage increase (Case I), a seepage increase that is not attributable to the project (Case II), and a seepage increase that is caused by the project (Case III). Mean water levels in individual piezometers surpass the seepage performance standard in Case II; however, mean water levels in background piezometers show a corresponding increase, indicating a regional seepage increase not caused by the project (Figure 3D-4). The seepage increase in individual piezometers in Case III is attributable to the project

because background piezometers do not show a corresponding increase (Figure 3D-4).

It was assumed that final seepage performance standards will be set by SWRCB in consultation with the local reclamation districts governing adjacent islands, the technical review group described below, and DWR.

**Evaluation of Monitoring Information.** DW has proposed the continuation of a technical review group, similar to the Seepage Review Committee, to work with DW and its engineers to jointly evaluate any seepage increases caused by the project and cooperatively review appropriate corrective actions. During diversions, DW would submit biweekly reports describing the results of seepage monitoring to the technical review group, SWRCB, and DWR. If seepage exceeds performance standards, additional diversions of water would be halted, the technical review team would be informed, and remedial actions described below would be implemented. The committee would be informed and DW would implement one or more of the seepage control measures described below. Water diversions would not be restored until seepage monitoring indicated that seepage levels are not exceeding the performance standards. DW would also submit quarterly seepage reports summarizing the results of ongoing seepage monitoring.

**Remedial Measures to Control Seepage**. If seepage monitoring detects seepage caused by the project that exceeds the seepage performance standards, DW would undertake appropriate measures to reduce the seepage to preproject levels. These measures may consist of installing additional interceptor wells or other available measures described below.

One potential method for controlling seepage is implementation of a relief well program. A relief well is a well that drains a pervious soil layer to relieve seepage. A relief well program for Alternative 1 would consist of relief wells installed at regular spacings near the toes of existing levees on neighboring islands. Discharge elevations for the relief well system would be set to maintain water levels within historical levels to control subsidence rates. (HLA 1992a.)

The effectiveness of relief wells in controlling seepage was tested in the McDonald Island drawdown demonstration study, conducted by HLA under contract to DW (HLA 1990a). This investigation sought to demonstrate that groundwater head in a sand aquifer can be lowered using a groundwater relief well system and that such a system is a viable option for controlling seepage caused or increased by the proposed project. Results from the McDonald Island drawdown demonstration indicate that dewatering was effective in controlling essentially all seepage through the sand aquifer into the island and that a gravity flow relief system can control hydraulic head in the sand aquifer within a desired range by adjusting the discharge head level (HLA 1990a, b).

Relief wells would provide neighboring reclamation districts and landowners with benefits unrelated to the DW project. In addition to providing valuable reclamation capabilities on neighboring islands, relief wells can reduce the risk of levee instability as subsidence continues (HLA 1992a).

The effect that increased seepage may have on levee stability can also be offset through construction of toe berms with an internal drainage system on neighboring islands. Berm construction would depend on the agreement of the affected landowner and the reclamation district. Other measures may be more feasible where an agreement cannot be reached.

Other technically feasible seepage control measures include lowering the design pool elevation on the DW reservoir islands, developing wetland easements adjacent to levees on neighboring islands, purchasing farmlands affected by increased seepage, constructing a combination of seep and interior ditches and increasing pumping rates, installing clay blankets, and installing impervious cutoff walls through project island levees.

**Siphon and Pump Station Erosion Control Measures**. Facilities needed for the proposed water storage operations include intake siphons to divert water into the island interiors and pump stations to discharge the stored water from the islands. A new intake siphon complex and a new discharge pumping station would be constructed on the reservoir islands. (See locations in Chapter 2, Figures 2-2, 2-3, 2-7, and 2-8).

Because flow velocities could cause erosion at the interior toes of the newly reconstructed levees, expansion chambers are proposed for the siphon outlets and pump outlets (see siphon and pump designs in Appendix 2, Figures 2-2 and 2-5). These chambers would dissipate exit flow energies, decrease the exit velocities onto the island interiors, and prevent erosion to the interior levee toes.

The outlets from the proposed pump stations would discharge underwater on the channel side of the levees. The discharge velocities from the pump outlets would not exceed 5 feet per second when water is entering the Delta channels. Exit velocities would be reduced to this level by an expansion chamber fitted to the end of each discharge pipe. Additionally, rock riprap would be placed around the outlets where necessary to protect the embankments and dissipate energy. Velocities at the intake ends of the siphons would not cause erosion to the exterior channel sides of the levee embankments.

**Construction Techniques.** Placing levee construction materials on soft or poorly consolidated foundation soils can lead to rapid compression, slumping, and ground heave. To control these problems during construction, the toe berm fill will be started prior to fill being placed on the slopes or levee crest. After the toe berm has been installed, the slope and crest fills may be completed. The first fill placement would be no more than 5 feet thick on peat or clay substrates and no greater than 8 feet thick on sand substrate. These placement limits would allow pore pressures in foundation materials to dissipate and would permit monitoring of the existing levees with piezometers as construction proceeds (HLA 1989).

Peat foundation materials are expected to consolidate and pore pressures are expected to dissipate quickly after the first placement of fill (HLA 1989). The fill on the crest would be allowed to remain in place as long as possible prior to placement of the road surface; this will allow some settlement and minor grading to occur prior to completion of the levee road.

The second placement could be possible within a few months of the first. As the peat foundation material consolidates, permeability and rates of pore pressure dissipation would decline, and the interval between fill placements may increase. On clay or clayey peat materials, pore pressure would dissipate more slowly, and many months may be needed between fill placements (HLA 1989).

DW constructed a levee test section (a section of levee built to determine its stability characteristics) on Bouldin Island away from existing levees. The test section was brought to failure so that strength and behavior of foundation materials could be evaluated. The test section was constructed using conventional construction equipment (i.e., scrapers). Fill was placed until failure occurred, while measures of pore pressure, shear strength, and settlement were made. Strength of foundation materials was determined through back-calculation of the stresses when failure occurs and then evaluation of lateral deformation, cracking, and settlement. Results from the test section will be used during the final design phase for the DW project to determine safe rates of levee construction. Results of the test on Bouldin Island are described in the Wilkerson Dam report (HLA 1992b).

**Construction Monitoring.** DW engineers would monitor rates of settlement, consolidation, and strength gain during the levee reconstruction process. Piezometers and other equipment used to determine settlement (e.g., settlement plates and slope inclinometers) would be installed prior to construction near existing levees where they are unlikely to be damaged by construction activity. If monitoring detects levee stability problems, construction would be halted until the problem is corrected or compensated for through modification of designs or procedures.

**Sources of Levee Materials.** Materials needed to improve the existing levees would be obtained primarily from sand deposits within the interiors of the islands. Some peat may also be mixed with sand dredged for reconstructing the levees. Analyses performed on 66 sand samples from the island interiors indicated that sands on all project islands are suitable for use as levee fill (HLA 1989).

Supplies of suitable sand deposits for levee construction exist on all the DW project islands (HLA 1989). Sand frequently lies beneath layers of soft peat approximately 10-15 feet deep, which must first be removed from the borrow areas. The 1995 DEIR/EIS reported that the borrow pits would generally be more than 400 feet inward from the top of a levee to avoid structural impacts on the levee and at least 2,000 feet inward from the final toe of an improved levee where seepage restrictions are required. Additional analysis completed for the 2000 REIR/EIS indicates that borrow pits should be located at least 800 feet from the levee in areas of potentially high seepage; see the section below from the 2000 REIR/EIS entitled "Adequacy of Borrow Area Setbacks".

It is anticipated that rock revetment would be quarried from either the Dutra-McNeer quarry or the Basalt quarry of Syar Industries. Both of these quarry operations are presently ongoing. Riprap material would be barged from the quarry to the construction site (see Chapter 3L, "Traffic and Navigation"). Levee construction under Alternative 1 would require approximately 470,000 tons of rock for Bacon Island

and 405,000 tons of rock for Webb Tract (Forkel pers. comm.).

**Postconstruction Monitoring and Maintenance.** Reconstructed exterior levees would be maintained for the life of the project. Maintenance activities for the reservoir island levees and their erosion protection would include the following measures.

# DW will conduct a weekly inspection of the levees to check for surface erosion, slumping, tension cracking, damaged erosion protection, seepage, and encroaching vegetation. Results of weekly monitoring inspections would be submitted to the governing local reclamation district and DWR for review and to SWRCB for permit compliance.

# If weekly inspections indicate erosion, cracking, or seepage problems, DW will implement corrective actions, including, but not limited to, placement of fill material; placement or installation of erosion protection material; reshaping or grading of fill material; herbicide application; selective burning; and/or installation of relief wells, toe berms on adjacent islands, or other seepage control measures described below.

# Tall grasses, brush, and/or trees will be kept cleared from the levee crest, slope, and stability berm.

# Areas of erosion will be repaired through replenishment of the protective cover as needed.

# The road surface will be regraded and/or patched as required for all-weather accessibility.

# Levee profile surveys will be conducted by DW annually for the first 5 years of operation and triannually thereafter. Results of levee profile surveys will be submitted to DWR, SWRCB, and the Corps for review.

# The levee crest will be raised by the addition of fill to maintain the crest at or above DWR Bulletin 192-82 criteria, additional erosion protection will be placed to protect the added fill, and the all-weather road surface will be reestablished after the fill is placed.

**Wave Erosion Protection, Monitoring, and Maintenance Program.** A weekly visual inspection of levees would be conducted by DW to ensure that erosion protection materials are not eroded beyond 50-year storm design criteria. Results of visual inspections would be included in DW's quarterly report to the local reclamation districts and DWR. If visual monitoring indicates that erosion is occurring more rapidly than anticipated during design analysis, corrective action will be taken immediately. Corrective actions include, but are not limited to, installing wave protection barriers, increasing erosion protection placement, and/or lowering reservoir water levels (HLA 1992c). Appropriate corrective action to ensure protection of the levee crest would be determined in the field based on conditions encountered.

**Bouldin Island and Holland Tract**

Under Alternative 1, Bouldin Island and most of Holland Tract (3,014 acres) would be devoted to wildlife habitat. On the habitat islands, the existing levee system would be improved to meet state-recommended standards for Delta levees identified in DWR Bulletin 192-82. The interior slope faces and toe berms of the perimeter levees would be planted with grass to resist erosion from rainfall and would be maintained in a manner similar to current practices. Levee tops would be modified to accommodate construction and operation of recreation facilities. The recreation facilities would be constructed on a raised pile foundation interior of the center line of the levees and would not require levee improvements beyond those currently required. As described in Chapter 2, "Delta Wetlands Project Alternatives", DW has removed construction of recreation facilities from its CWA permit applications; nevertheless, the analysis of impacts on levee stability and seepage associated with construction and operation of these facilities is provided in this chapter. Routine maintenance activities on perimeter levees would not differ from current practices and would include, but are not limited to, placement of fill material and gravel, reshaping of fill material, grading, discing, mowing, selective burning, rodent control, and installation of rock revetment.

## Changes in Flood Control Conditions

### Bacon Island and Webb Tract

**Settlement during Construction**. DW's proposed material placement procedures, use of the levee test section, and construction monitoring program would contribute to adequate levee reliability. Levee stability analyses by HLA (1989) calculated safety factors during construction of the proposed DW levee improvements. Adequate safety factors were calculated if lifts of fill did not exceed 5 feet until sufficient time was allowed for consolidation and strength gain in foundation materials. As proposed, levee reconstruction on the DW project islands would be staged over several years to allow time for consolidation of foundation materials. Therefore, reconstruction of reservoir island levees would not affect levee stability during construction.

The 2000 REIR/EIS levee stability analysis also evaluated postconstruction levee conditions; see the section below from the 2000 REIR/EIS entitled "Results of the New Analysis of Delta Wetlands Project Effects on Levee Stability".

**Settlement and Long-Term Levee Stability**. Reconstruction of levees by DW would cause compression of substrates and settlement of the new levees. Extent of settlement would vary both with thickness of fill and with peat thickness below the fill.

HLA estimated depths of settlement resulting from fill placement in an area directly underlain by 20 feet of peat. If fill is added up to an elevation of 15 feet above the initial ground surface and then is continuously placed as the ground settles (keeping the surface of the fill 15 feet above the original ground elevation), 15 feet of settlement is predicted. This condition would result in the thicknesses of the underlying peat compressing from 20 feet to 5 feet. The total thickness of the fill would be 30 feet: the initial 15 feet of fill thickness plus another 15 feet placed over time to maintain the top elevation of the fill as the fill mass settles. (HLA 1989, Hultgren pers. comm.) Approximately one-half of the estimated settlement would occur within 2-3 months after fill placement, one-quarter of the settlement would occur within 3 years, and the remaining one-quarter would occur over the next 30-50 years (HLA 1989). Figure 3D-5 shows examples of settlement of initial fill (the initial fill profile is shown in Figure 3D-2) and the additional fill required to raise the levee crest.

Differential settlement can create tensions in the soil, resulting in cracks parallel to the existing levee. Cracking may also occur where the reconstructed levee joins with an existing levee, where levees cross subsurface peat or clay-filled channels, or where new interior levees abut existing levees. These factors differ for each site on the DW project islands and would be investigated in detail before construction begins and before settlement monitoring locations are chosen. Monitoring and maintenance of levees as described above would quickly detect any cracking problems and replenish fill material where cracking occurs.

Differential settlement caused by levee reconstruction may also affect existing levees. Any cracking of the existing levees caused by levee reconstruction would be mitigated by placement of sand against the inside of the existing levees. Movement of soil from levee cracks or water seeping through cracks would be slowed by the fill and would be monitored for subsequent maintenance needs, including placement of additional fill or implementation of erosion control measures.

Stability analyses by HLA (1993) calculated that under Alternative 1, levee reconstruction would increase the factor of safety for levee stability 14%-28% (depending on levee slope design) over existing conditions. The inward (toward island interior) factor of safety would increase immediately after construction and continue to increase as the peat foundations consolidate and gain strength under the weight of new fill. The outward (toward Delta channels) factor of safety would decrease about 10% when the reservoir is full, but the margin of safety would still be greater than that computed for existing conditions. There is a slight decrease in the factor of safety calculated for the exterior levee slope when the reservoir is full because the island would be filled to 6 feet above the channel water levels. However, the consequence of a levee breach would be much less when the island reservoir is full or partially full than when the island is empty, as it is now, because improved DW project levees are more likely to minimize the size of a levee breach if one occurs and because the hydraulic head between the channel water level and reservoir water level (approximately 6 feet) would be less than the existing head between the channel water level and island interiors (16-18 feet) (HLA 1993). Therefore, the existing conditions pose a higher risk to levee stability than the levee configurations under Alternative 1.

The independent evaluation of levee stability included in the 2000 REIR/EIS verified that levee improvements would increase the factor of safety (FS) toward the reservoir islands when compared to the existing conditions. However, the long-term FS toward the slough would decrease when compared to existing conditions. See "Results of the New Analysis of Delta Wetlands Project Effects on Levee Stability" below.

In conclusion, levee settlement or instability is not predicted to adversely affect levee reliability because the proposed initial placement of fill would be staged over several years until sufficient levee heights are reached, and because the proposed annual maintenance program would replenish the levee slopes with new fill to compensate for settlement. Any diminishing of levee height or cracking would be corrected annually. Levee stability analysis indicates that implementing Alternative 1 would improve levee stability and safety factors toward the reservoir islands, but would decrease levee stability and safety factors toward the adjacent slough.

**Seepage**. Dredging of material for improvements to the levees would cause exposure of subsurface sand deposits on the reservoir island interiors. Under proposed water storage operations, such exposed areas would be subject to up to 24 feet of hydraulic head. Such exposure of sand deposits has the potential to permit seepage beneath the DW project levees to adjacent islands.

An engineering model (SEEP) was used by HLA (1989) to analyze seepage potential of water storage on Webb Tract across Fishermans Cut to Bradford Island. This location was identified as being particularly sensitive because of the short seepage distance across Fishermans Cut. Fixed hydraulic levels were tested under a range of permeability conditions of soil materials to determine the effect of flooding and exposed borrow pit excavation. The model indicated that both hydraulic heads and seepage levels in sands on Bradford Island would increase as a result of flooding of Webb Tract. This analysis assumed a water storage elevation of +4 feet based on a previous project description; however, the currently proposed water storage level of +6 feet would not alter the results of the study (Tillis pers. comm.). Seepage levels would still increase on Bradford Island as a result of the proposed +6 feet water storage under Alternative 1.

Alternative 1 incorporates an interceptor well system to control seepage to adjacent islands and a seepage monitoring system described above under "Flood Control Features". The monitoring system would verify that seepage on adjacent islands is controlled at or below existing conditions and would detect the need for additional seepage control measures to be implemented. A measurable seepage performance standard based on background monitoring data to determine existing seepage conditions would be used to trigger the implementation of additional seepage control measures. The 1995 DEIR/EIS concluded that implementation of the seepage monitoring and control program under Alternative 1 would control seepage at existing conditions.

The 2000 REIR/EIS included an independent analysis of the ability of the proposed interceptor well system to control groundwater seepage, the long-term reliability of the proposed system, and the adequacy and effectiveness of the proposed seepage monitoring program. See "Results of the New Analysis of Delta Wetlands Project Effects on Seepage" below.

**Wind and Wave Erosion**. The proposed flooding of reservoir islands could result in wind and wave erosion of the interior levee slopes because of the long wind fetch across the islands and the water depths during water storage. Prolonged removal of levee slope material by wave erosion of the interior levee slopes could eventually affect levee reliability. Interior slopes of perimeter levees would be constructed with erosion control material (rock revetment or riprap) similar to that used on exterior levee slopes.

The erosion control measures, erosion monitoring program, and levee maintenance measures described above under "Flood Control Features" would be implemented as part of Alternative 1. Perimeter levees would be inspected weekly, and any potential erosion problems would be reported and would trigger maintenance measures, which could include placement of additional rock revetment, replenishment of fill, or lowering of pool elevations.

The 2000 REIR/EIS also included an independent analysis of wave runup to evaluate the reservoir island levees' freeboard and erosion potential. The analysis concluded that wave runup would not result in substantial erosion or overtopping of the proposed levees on the reservoir islands. See the section below entitled, "Wave Runup and Erosion".

**Slope Slippage during Drawdown of Stored Water**. If levee soils remain saturated while external water pressure is removed, as could occur during drawdown of the reservoirs, the levee slope could become

unstable. The rate of drawdown would be slow enough to allow substantial drainage of the relatively permeable slope materials (Tillis and Hultgren pers. comms.). Drawdown is considered rapid if a water level is lowered faster than the soil's ability to drain; in this case, the weight of saturated soil exceeds the stabilizing effect of water pressure against the levee embankment, which can result in slope slippage. Based on a discharge rate of 4,000 cfs, the reservoir drawdown rate could be as fast as 18 inches per day at the higher reservoir stages (Hultgren pers. comm.). This drawdown rate would not be considered rapid from this perspective (Tillis and Hultgren pers. comms.). Therefore, the possibility of slope failure during drawdown would be minimal under Alternative 1. Any interior slope slippage following drawdown would be corrected during maintenance replenishment of fill material. DW's proposed drawdown schedule would not threaten levee stability during drawdown of stored water.

See also the 2000 REIR/EIS results of the levee stability analysis for the sudden drawdown condition under "Results of the New Analysis of Delta Wetlands Project Effects on Levee Stability" below.

**Erosion at Siphon and Pump Stations**. High-velocity water releases at siphon and pump stations could erode levee materials. Operation of the proposed siphon and pump stations would not cause substantial levee toe erosion on interior or exterior levee slopes because the stations would be equipped with expansion chambers, which reduce flow velocities through dissipation, and rock revetment will be placed in the interiors of the islands to minimize erosion potential of the levee toe surfaces at the siphon and pump stations.

**Project-Induced Seismic Activity**. Although deep well water injection and reservoir flooding have been associated with triggering earthquakes, there is no evidence to support that theory in the Delta area. The presence of the Sacramento and San Joaquin Rivers and the existing flooding of Franks Tract have not increased seismic activity in the region. Creating reservoirs on Bacon Island and Webb Tract would not be likely to increase seismic risk in the Delta region.

**Liquefaction and Levee Movement during Seismic Activity**. The two predominant risks to Delta levees during earthquakes are liquefaction (loss of soil cohesion when subject to shaking) of poorly consolidated sands beneath levees and damage caused by movement of levees under seismic acceleration. The materials used for levee reconstruction could be subject to liquefaction resulting from seismic acceleration; however, both these risks would be reduced by the proposed buttressing of the DW project island levees. Soil borings indicate that some of the sand layers beneath the peat on the DW project islands have a potential for liquefaction, but levee reconstruction and island flooding would probably not increase nor decrease the potential for liquefaction and levee failure (HLA 1989). Because the proposed levees are broader than the existing levees and broader levees distribute seismic effects over a larger area, total levee failure caused by substrate liquefaction would be less likely with the proposed levees than with the existing levees. The buttressed project levees would have much greater mass than existing levees and may be less vulnerable to failure from seismic acceleration. The level of potential risk of levee movement under seismic shaking may be somewhat lower than many existing levels because levee stability would increase under Alternative 1.

An earthquake powerful enough to cause failure of project levees would likely destroy many of the existing weaker levees on neighboring islands. Even if they failed under seismic activity, project levees would be likely to offer some protection against wind-generated wave erosion. DW project levees would probably be more intact and more easily repaired following a breach than would other Delta levees. Thus, Alternative 1 would likely produce an overall benefit in levee protection under seismic activity.

An updated evaluation of seismically induced levee deformations was completed for the 2000 REIR/EIS; see the description of the dynamic (i.e., seismic) stability analysis under "Results of the New Analysis of Delta Wetlands Project Effects on Levee Stability" below.

**Levee Fill Availability**. Sources of suitable levee reconstruction material are located on the DW project islands or in existing quarries in the region. Borrow quantities for Alternative 1 are shown in Table 3D-4. It is unlikely that levee construction and improvement under Alternative 1 would deplete regional supplies of levee materials.

**Bouldin Island and Holland Tract**

Habitat management on Bouldin Island and Holland Tract would not decrease levee stability or require substantial amounts of levee material during project construction. A habitat type defined as "borrow

pond" is included in the HMP (Appendix G3, "Habitat Management Plan for the Delta Wetlands Habitat Islands") and would provide a source of adequate borrow material for initial construction under the project. Borrow ponds would be managed similarly to lake habitat but may be deeper than the proposed lakes and would be occasionally disturbed to facilitate extraction of borrow for long-term maintenance of the project. Any future borrow excavation for levee maintenance outside these areas would be subject to review by the HMP oversight team, but overall, habitat management on these islands would not impair long-term levee maintenance activities.

Habitat management would slow the rate of subsidence on these islands relative to subsidence rates under existing agricultural use. Therefore, implementation of Alternative 1 would increase long-term levee stability on habitat islands by decreasing subsidence.

**Summary of Project Impacts and Recommended Mitigation Measures**

**Impact D-1: Change in Long-Term Levee Stability on Reservoir Islands**. Implementation of Alternative 1 would increase levee stability on the reservoir islands toward the islands and decrease levee stability toward the slough; see the section below from the 2000 REIR/EIS entitled "Potential Decrease in Long-Term Levee Stability on the Delta Wetlands Reservoir Islands". This impact is considered significant.

Implementing Mitigation Measure RD-1 would reduce Impact D-1 to a less-than-significant level.

**Mitigation Measure RD-1: Adopt Final Levee Design that Achieves Recommended Factor of Safety and Reduces the Risk of Catastrophic Levee Failure.** This measure is described below in the section from the 2000 REIR/EIS entitled "Potential Decrease in Long-Term Levee Stability on the Delta Wetlands Reservoir Islands".

**Impact D-2: Potential for Seepage from Reservoir Islands to Adjacent Islands**. Implementation of Alternative 1 could increase the potential for seepage beneath the DW island levees to adjacent islands during project operation. The proposed project seepage monitoring and control measures that are detailed above are intended to control seepage at or below existing conditions. This impact which is described in the section below from the 2000 REIR/EIS entitled "Potential Seepage on Adjacent Islands Resulting from Project Operations", is considered significant.

Implementing Mitigation Measure RD-2 would reduce impact D-2 to a less-than-significant level.

**Mitigation Measure RD-2: Modify Seepage Monitoring Program and Seepage Performance Standards.** This measure is described below in the section from the 2000 REIR/EIS entitled "Potential Seepage on Adjacent Islands Resulting from Project Operations".

**Impact D-3: Potential for Wind and Wave Erosion on Reservoir Islands**. Implementation of Alternative 1 could result in wind and wave erosion of the interior levee slopes of perimeter levees on reservoir islands because of the long wind fetch across the islands and the water depths during water storage. Interior slopes of the levees would be constructed with rock revetment to prevent erosion of the interior levee slopes. The erosion control design measures, erosion monitoring program, and levee maintenance measures described above would be implemented under Alternative 1. Therefore, this impact is considered less than significant.

**Mitigation**. No additional mitigation is required.

**Impact D-4: Potential for Erosion of Levee Toe Berms at Pump Stations and Siphon Stations on Reservoir Islands**. Implementation of Alternative 1 would not cause substantial levee toe erosion at siphon and pump stations on interior or exterior levee slopes. Pump and siphon units would be equipped with expansion chambers, which reduce flow through dissipation, and routine inspection and maintenance of the levees would identify any erosion problems and include implementing erosion control measures as needed. Therefore, this impact is considered less than significant.

**Mitigation**. No mitigation is required.

**Impact D-5: Change in Potential for Levee Failure on DW Project Islands during Seismic Activity**. Implementation of Alternative 1 would require strengthening and reconstructing perimeter levees on reservoir islands and improving perimeter levees on habitat islands. Existing levees on reservoir islands would be buttressed and broadened, and levees

on habitat islands would be improved to meet DWR's recommended standards for Delta levees. The overall risk of levee failure caused by earthquakes is discussed below under "Potential Levee Failure on Delta Wetlands Project Islands during Seismic Activity". The change in the potential risk of levee failure is considered significant.

Implementing Mitigation Measure RD-1 would reduce Impact D-5 to a less-than-significant level.

**Mitigation Measure RD-1: Adopt Final Levee Design that Achieves Recommended Factor of Safety and Reduces the Risk of Catastrophic Levee Failure.** This measure is described below in the section from the 2000 REIR/EIS entitled "Potential Decrease in Long-Term Levee Stability on the Delta Wetlands Reservoir Islands".

**Impact D-6: Increase in Long-Term Levee Stability on Habitat Islands**. Implementation of Alternative 1 would slow the rate of subsidence on Bouldin Island and Holland Tract relative to subsidence rates under existing agricultural use. Decreased subsidence contributes to increased long-term levee stability on habitat islands. Therefore, this impact is considered beneficial.

**Mitigation**. No mitigation is required.

## IMPACTS AND MITIGATION MEASURES OF ALTERNATIVE 2

Impacts and mitigation measures of Alternative 2 are the same as those of Alternative 1.

## IMPACTS AND MITIGATION MEASURES OF ALTERNATIVE 3

Alternative 3 involves storage of water on Bacon Island, Webb Tract, Bouldin Island, and Holland Tract, with secondary uses for wildlife habitat and recreation. The portion of Bouldin Island north of SR 12 would be managed as a wildlife habitat area and would not be used for water storage. The impacts of Alternative 3 on flood control in the project area are described below.

### Flood Control Features

The exterior levees of the four DW project islands would be reconstructed as described for levee reconstruction on Webb Tract and Bacon Island under Alternative 1. The design, construction, monitoring, and maintenance measures for reservoir island perimeter levees for Alternative 3 would be as described for Alternative 1.

Alternative 3 would require interior levees to be constructed around several parcels not owned by DW: the two marina sites at the south edge of Holland Tract, and across Bouldin Island on the southern and northern sides of SR 12. The interior levee on the south side of SR 12 would be designed and constructed in accordance with standards of DWR's DSOD. Interior levee designs have been submitted to DSOD for review and approval (Hultgren pers. comm.). The levee on the southern side of SR 12 on Bouldin Island is described in Chapter 3E, "Utilities and Highways", and in Appendix E1, "Design and Construction of Wilkerson Dam South of SR 12 on Bouldin Island".

The methods of fill placement and staged construction for interior levees would be similar to those described for the exterior levees, except that fill would be compacted to DSOD standards. The DSOD levees would be protected from wind and wave erosion on the water side with a method of slope protection, potentially a high-density polyethylene surface or placement of riprap.

The DSOD levee on Bouldin Island may require a longer construction period than all other elements of the project. Borrow material from the island would be used for interior levee construction. An estimated 8,900,000 cubic yards of borrow material would be needed for the DSOD levee construction (Table 3D-5).

### Changes in Flood Control Conditions

**Bacon Island, Webb Tract, Bouldin Island, and Holland Tract**

**Settlement during Construction**. Settlement impacts on the reservoir islands under Alternative 3 would be similar to those described above for reservoir islands under Alternative 1. Stability analysis (HLA 1989) indicates that levee reconstruction on the DW

islands would allow time for consolidation of foundation materials and would not affect levee stability during construction.

**Interior Levees**. The toe of the proposed interior levee along the southern side of SR 12 across Bouldin Island would be set back from the highway to protect the roadbed from settlement problems caused by the new levee (HLA 1989). DWR's DSOD must approve the final design of this interior levee (see Chapter 3E and Appendix E1 for further detail regarding the proposed DSOD levee).

Given that DSOD must approve the design and construction of these interior levees, no increase in flooding hazard or decrease in public safety is expected to occur during project operation.

**Settlement and Long-Term Levee Stability**. Long-term levee stability impacts on Alternative 3 reservoir islands would be similar to those described for the two reservoir islands under Alternative 1.

**Seepage**. The seepage mitigation, monitoring, and control program under Alternative 3 would control seepage impacts as described for Alternative 1 but would be expanded to include Bouldin Island and Holland Tract.

Under Alternative 3, 142 more piezometers would be installed on neighboring islands than would be installed under Alternative 1. Figure 3D-6 shows the proposed interceptor well system and seepage monitoring system for Alternative 3.

**Wind and Wave Erosion**. The erosion control measures, erosion monitoring program, and levee maintenance measures described for Alternative 1 would be implemented as part of Alternative 3. Alternative 3 would require approximately 470,000 tons, 405,000 tons, 385,000 tons, and 400,000 tons of rock for levee improvements on Bacon Island, Webb Tract, Bouldin Island, and Holland Tract, respectively (Forkel pers. comm.). Potential erosion effects would be monitored weekly, and proposed maintenance measures would be implemented to maintain levees at conditions equal to or better than existing conditions.

**Liquefaction and Levee Movement during Seismic Activity**. Liquefaction effects of seismic shaking under Alternative 3 would be similar to those described above for reservoir islands under Alternative 1.

**Levee Fill Availability**. As under Alternative 1, sources of suitable levee reconstruction material are adequate for Alternative 3 and are located on the DW project islands or in existing quarries in the region. Borrow quantities proposed for Alternative 3 are shown in Table 3D-5.

**Summary of Project Impacts and Recommended Mitigation Measures**

**Impact D-7: Change in Long-Term Levee Stability on Reservoir Islands**. This impact is described above under Impact D-1. This impact is considered significant.

Implementing Mitigation Measure RD-1 would reduce Impact D-7 to a less-than-significant level.

**Mitigation Measure RD-1: Adopt Final Levee Design that Achieves Recommended Factor of Safety and Reduces the Risk of Catastrophic Levee Failure.** This measure is described below in the section from the 2000 REIR/EIS entitled "Potential Decrease in Long-Term Levee Stability on the Delta Wetlands Reservoir Islands".

**Impact D-8: Potential for Seepage from Reservoir Islands to Adjacent Islands**. This impact is described above under Impact D-2. This impact is considered significant.

Implementing Mitigation Measure RD-2 would reduce Impact D-2 to a less-than-significant level.

**Mitigation Measure RD-2: Modify Seepage Monitoring Program and Seepage Performance Standards.** This measure is described below in the section from the 2000 REIR/EIS entitled "Potential Seepage on Adjacent Islands Resulting from Project Operations".

**Impact D-9: Potential for Wind and Wave Erosion on Reservoir Islands**. This impact is described above under Impact D-3. This impact is considered less than significant.

**Mitigation**. No mitigation is required.

**Impact D-10: Potential for Erosion of Levee Toe Berms at Pump Stations and Siphon Stations on Reservoir Islands**. This impact is described above under Impact D-4. This impact is considered less than significant.

**Mitigation**. No mitigation is required.

**Impact D-11: Change in Potential for Levee Failure on DW Project Islands during Seismic Activity**. This impact is described above under Impact D-5. This impact is considered significant.

**Mitigation**. No mitigation is required.

Implementing Mitigation Measure RD-1 would reduce Impact D-11 to a less-than-significant level.

**Mitigation Measure RD-1: Adopt Final Levee Design that Achieves Recommended Factor of Safety and Reduces the Risk of Catastrophic Levee Failure.** This measure is described below in the section from the 2000 REIR/EIS entitled "Potential Decrease in Long-Term Levee Stability on the Delta Wetlands Reservoir Islands".

## IMPACTS AND MITIGATION MEASURES OF THE NO-PROJECT ALTERNATIVE

The project applicant would not be required to implement mitigation measures if the No-Project Alternative were selected by the NEPA and CEQA lead agencies. However, mitigation measures are presented for impacts of the No-Project Alternative to provide information to the reviewing agencies regarding the measures that would reduce impacts if the project applicant implemented a project that required no federal or state agency approvals. This information would allow the reviewing agencies to make a more realistic comparison of the DW project alternatives, including implementation of recommended mitigation measures, with the No-Project Alternative.

### Flood Control Features

Levee maintenance and operation under the No-Project Alternative would be the same as existing routine maintenance procedures.

### Changes in Flood Control Conditions

#### Bacon Island, Webb Tract, Bouldin Island, and Holland Tract

**Settlement and Long-Term Levee Stability**. Under the No-Project Alternative, which would consist of intensified agricultural operations on the project islands, the DW island interiors would subside an additional 6-10 feet over the next 40 years (HLA 1989). Levee heights would increase as the island interiors subside. Long-term stability analyses indicate that levee reliability would decrease below existing conditions under the No-Project Alternative.

**Seepage**. The loss of peat through subsidence and oxidation could lead to greater infiltration and increased seepage onto the island. Seepage under the No-Project Alternative would exceed existing conditions.

**Wind and Wave Erosion**. Wind and wave erosion under No-Project conditions would be similar to existing erosion. The No-Project Alternative would not increase erosion on the DW project island levees.

**Liquefaction and Levee Movement during Seismic Activity**. Because the No-Project Alternative would decrease levee stability compared with existing conditions, the risk of seismically induced levee failures would increase.

#### Summary of Project Impacts and Recommended Mitigation Measures

**Decrease in Long-Term Levee Stability**. Implementation of the No-Project Alternative would result in increased levee heights on the DW project islands as the island interiors subside. Long-term levee stability analyses indicate that levee reliability would decrease under the No-Project Alternative. Implementing the following measure would reduce this effect of the No-Project Alternative.

**Buttress Perimeter Levees**. The perimeter levees of the DW project islands could be substantially buttressed to increase levee stability under the No-Project Alternative. The need for improvements to those levees over time would be evaluated by the local reclamation districts.

**Increase in Potential for Seepage onto Project Islands**. Implementation of the No-Project Alternative would cause the loss of peat through subsidence and oxidation on DW project islands, which could lead to greater infiltration and increased seepage onto the DW project islands.

**Increase in Potential for Levee Failure during Seismic Activity**. Implementation of the No-Project Alternative would decrease long-term levee stability, which would increase the potential for seismically induced levee failures.

## CUMULATIVE IMPACTS

Cumulative impacts are the result of the incremental impacts of the proposed action when added to other past, present, and reasonably foreseeable future actions. The following sections consider only those impacts that may contribute cumulatively to impacts on flood control on the Delta islands.

### Cumulative Impacts, Including Impacts of Alternative 1

#### Cumulative Flood Hazard

The 2000 REIR/EIS updated the analysis of cumulative flood hazard conditions in the Delta; see the section from the 2000 REIR/EIS entitled "Cumulative Impacts" below.

**Impact D-12: Decrease in Cumulative Flood Hazard in the Delta**. Implementation of planned levee improvements throughout the Delta, combined with improvements on the DW project islands, would likely reduce the cumulative risk of flooding in the Delta. This impact is considered beneficial.

**Mitigation**. No mitigation is required.

#### Financing of the Levee System

Implementation of Alternative 1 would reduce the need for public financing of maintenance and repair work on the levee systems around the DW project islands. DW would continue to seek reimbursement for maintenance work on the channel sides of exterior levees. During the early 1980s, public financing of this work on the four islands exceeded $36 million, or about $5.5 million each year. Alternative 1 would have a substantial fiscal benefit at the state and federal levels. Savings would result from the project because the risk of levee failure toward the islands would be reduced, the cost of project-specific maintenance and rehabilitation work on the levees above state or federal standards would be borne entirely by DW, and the cost of reclamation would be much lower than in the case of existing Delta levees because much of the routine levee maintenance would not fall within the state or federal cost-sharing programs.

**Impact D-13: Decrease in the Need for Public Financing of Levee Maintenance and Repair on the DW Project Islands**. Implementation of Alternative 1 would likely reduce the need for public financing of levee maintenance and repair on the DW project islands. Savings at the state and federal level would result from project implementation because the risk of levee failure would be reduced, so the cost of reclamation would be much lower than in the case of existing levees. This impact is considered beneficial.

**Mitigation**. No mitigation is required.

### Cumulative Impacts, Including Impacts of Alternative 2

The cumulative impacts of this alternative would be the same as those described for Alternative 1.

### Cumulative Impacts, Including Impacts of Alternative 3

Implementation of planned levee improvements throughout the Delta, combined with improvements on the DW project islands, would likely reduce the cumulative risk of flooding in the Delta. Similar to Alternative 1, Alternative 3 would also reduce the need for public financing of maintenance and repair work on the levee systems around the DW islands.

### Cumulative Impacts, Including Impacts of the No-Project Alternative

Although levee reliability on the Delta Wetlands Project islands would decline over time under the No-Project Alternative, implementation of planned levee improvements throughout the Delta would likely result in a cumulative improvement in levee conditions.

## LEVEE STABILITY AND SEEPAGE ANALYSIS FROM THE 2000 REVISED DRAFT EIR/EIS

The remainder of this chapter includes the levee stability and seepage analysis that was conducted for the 2000 REIR/EIS. This information, which was presented as Chapter 6, "Levee Stability and Seepage", in the 2000 REIR/EIS, has been modified slightly from the 2000 REIR/EIS version in response to comments received on the 2000 REIR/EIS. However, those minor changes do not change the conclusions of the analysis.

## FOCUS OF THE 2000 REVISED DRAFT EIR/EIS ANALYSIS

Chapter 6 of the 2000 REIR/EIS presented information, developed since the 1995 DEIR/EIS was published, on potential Delta Wetlands Project effects on levee stability and seepage. The 1995 DEIR/EIS described Delta Wetlands' proposed preliminary levee design and seepage control system; that system includes operational measures developed by Delta Wetlands to avoid or reduce potential effects of project construction and operation on levee stability and use of adjacent islands for agriculture. In response to testimony presented at the Delta Wetlands water right hearing, the lead agencies determined that new information should be presented in the 2000 REIR/EIS to augment the evaluation presented in Chapter 3D, "Flood Control", of the 1995 DEIR/EIS.

### Delta Wetlands' Proposed Levee Design and Seepage Control System

As described above, Delta Wetlands proposes to improve the levees surrounding the reservoir islands. Under existing conditions, levee conditions are greatly variable. A typical present levee condition is a 20-foot-wide crest at an approximate elevation of +8.5 feet above mean sea level with an exterior (water-side) slope of 2:1 (horizontal to vertical) and an interior (land-side) slope of 4:1. Under the proposed project, a typical improved levee would have an exterior slope of 2:1, a crest about 22 feet wide (including the thickness of erosion protection on the interior slope) at an elevation of about +9 feet, a 3:1 or steeper initial interior slope down to an elevation near -3 feet, and wide land-side toe berms to buttress the levee. Alternatively, the interior slope may be inclined at about 5:1 and may not have toe berms. Figure 3D-2 shows examples of potential initial levee improvements on levees with a 3:1 existing interior slope. The new slopes would meet or exceed criteria for Delta levees outlined in DWR Bulletin 192-82. Levee-improvement materials would be obtained primarily from sand deposits on the project islands. Each borrow area would generally be located more than 400 feet inward from the toe of a levee so that the borrow excavation would not cause structural impacts on the levee and would be at least 2,000 feet inward from the final toe of an improved levee where a greater setback is necessary to control seepage.

The interior slopes of these perimeter levees would be protected from erosion by conventional rock revetment similar to that used on existing exterior slopes, or by other conventional systems such as soil cement or a high-density polyethylene liner. In areas where final design studies indicate that wave splash and runup could potentially erode the levee crest if it is unprotected, the levee crest would be hardened or the erosion-protection facing would be extended up as a splash berm.

The proposed project includes a seepage-control system that would consist of interceptor wells installed in the exterior levees of the reservoir islands in locations where substantial seepage to adjacent

islands through subsurface materials is predicted to occur (Figure 3D-3). Water captured by the interceptor wells would be pumped back into the reservoirs. The interceptor wells would be used to maintain the hydraulic heads in subsurface materials within preproject ranges at distances of 500 to 1,000 feet from the project island perimeters (i.e., beneath levees of adjacent islands). Relief wells and other alternative methods of seepage control may be substituted for or used to augment the interceptor well system during final design.

Delta Wetlands would implement a seepage monitoring program to provide early detection of seepage problems caused by project operations. A network of wells (i.e., piezometers) located immediately across the channels from the reservoir islands would be used to monitor seepage; background wells at distant locations would establish water-level changes that typically occur without project operations. Delta Wetlands has proposed seepage performance standards for the project that would be used to determine the amount of interceptor-well pumping needed to ensure that seepage is reduced to acceptable levels. The seepage-control system and seepage performance standards are described in more detail under "Project Features to Control Seepage" above.

## 1995 Draft EIR/EIS Evaluation, Comments, and New Information

### 1995 Draft EIR/EIS Evaluation

The evaluation of project effects presented in the 1995 DEIR/EIS was performed by comparing the proposed levee improvement design with existing conditions as described in the results of the preliminary investigations performed by Delta Wetlands' geotechnical consultants. These investigations included numerous field studies, monitoring, modeling, and levee stability analyses (see Appendix D1 of the 1995 DEIR/EIS for a listing). The impact analysis concluded that because of the elements and operational measures incorporated into the project design, the project would have no significant impacts on levee stability and seepage.

### New Information Developed for This Evaluation

Several commenters on the 1995 DEIR/EIS and protestants against Delta Wetlands' water right applications questioned the adequacy of Delta Wetlands' proposal with regard to levee stability and seepage to adjacent islands. To address this issue regarding the project's potential effects, an additional independent analysis of levee stability and seepage issues has been performed to provide information to supplement the 1995 DEIR/EIS discussion.

The analysis of these issues, performed by URS, is included as Appendix H of the 2000 REIR/EIS, "Levee Stability and Seepage Analysis Report for the Delta Wetlands Project Revised Draft EIR/EIS". The remainder of this chapter updates the assessment of potential Delta Wetlands Project effects presented in the 1995 DEIR/EIS by summarizing the findings of the URS analysis and, as requested by the USACE and SWRCB, presenting new information on boat-wake effects on levee erosion.

**Summary of Issues Addressed in the 2000 Revised Draft EIR/EIS Analysis of Levee Stability and Seepage**

The 2000 REIR/EIS analysis of issues related to flood control addresses the following questions, which represent the concerns expressed at the water right hearing and in comments on the 1995 DEIR/EIS:

# Can a pumped-well system (i.e., Delta Wetlands' proposed interceptor-well system) control groundwater seepage?

# What is the long-term reliability of the proposed interceptor-well system of seepage control?

# Would the proposed seepage monitoring program be adequate and effective?

# Could operation of the seepage-control system result in substantial water diversion onto the reservoir islands?

# Would the proposed setbacks for borrow-pit areas be adequate to prevent excessive seepage increases in the underlying sand aquifer?

# Would rapid changes in the reservoir water level cause additional stresses on underlying soil layers and additional settlement of the levees and interiors of reservoir islands?

# Would Delta Wetlands operations reduce the levees' dynamic or static stability?

# Would the construction and operation of the interceptor-well system reduce levee stability?

# What potential damage to adjacent islands could result if a reservoir island's levee failed or if the owner abandoned the project?

# Would increased wave action from Delta Wetlands Project-related boat use in Delta channels contribute to levee erosion and adverse effects on channel island habitats?

The information presented below adds more detail to the impact evaluation presented in the 1995 DEIR/EIS; however, the analysis does not address every extreme of conditions that could be encountered during project implementation. The discussion below is based on a proposed preliminary design of flood- and seepage-control features of the project and represents a general evaluation of the environmental feasibility of these features. Specific design issues, including site-specific geotechnical evaluations, will be addressed in detail as the lead agencies and the applicant proceed through the permit approval processes. Nonetheless, the level of detail presented below is adequate for purposes of NEPA and CEQA impact analysis and for determining the general feasibility of Delta Wetlands' proposal for levee stability and seepage control.

## Definition of Terms

The following are definitions of key terms as they are used in this chapter:

# *Aquifer:* A porous soil or geological formation lying between impermeable strata that contains groundwater; yields groundwater to springs and wells.

# *Bearing Capacity:* The maximum load that a structure can support, divided by its effective bearing area (the part of the structure that carries the load).

# *Borrow Area:* An excavated area or pit created by the removal of earth material to be used as fill in a different location.

# *Buttress:* To steady a structure by providing greater resistance to lateral forces to prevent failure.

# *Design Response Spectrum:* The specified range of ground motion in response to seismic activity that is assumed for an analysis based on historical data and local soil conditions.

# *Dynamic and Static Stability:* The stability of levees under seismic movement or without seismic movement.

# *Factor of Safety for Slope Stability (FS):* A calculated number representing the degree of safety of a slope against instability. The FS is expressed mathematically as the ratio of stabilizing effects (forces or moments) and destabilizing effects acting on a potentially unstable soil mass in a slope. When the FS is greater than 1, the soil mass in the slope is, in theory, stable; when the FS is less than 1, the slope is, in theory, unstable. For a given slope geometry and soil conditions, a calculated FS is associated with a unique slope failure configuration. The most critical failure configuration is associated with the minimum FS calculated in a slope stability analysis. Several agencies (such as the Association of State Dam Safety Officials and USACE) have developed criteria that provide different design FSs stipulated for various slope conditions (e.g., under long-term loading, shortly after construction, etc.). These FSs are typically above 1 and are recommended or required for various conditions, including consideration of uncertainties in design and risks to life and property.

# *Freeboard:* The vertical distance between a design maximum water level and the top of a structure such as a levee, dike, floodwall, or other control surface. The freeboard is a safety margin intended to accommodate unpredictable rises in water level.

# *Hydraulic Conductivity:* A measure of the capacity of a porous medium to transmit water, often expressed in centimeters per second. The hydraulic conductivity is equal to the rate of flow of water through a cross section of one unit area under a unit hydraulic gradient.

# *Hydraulic Gradient:* The rate of change in total hydraulic head per unit distance of flow measured at a specific point and in a given direction, often resulting from frictional effects along the flow path.

# *Hydraulic Head:* The force exerted by a column of liquid expressed as the height of the liquid above the point at which the pressure is measured (the force of the liquid column being directly proportional to its height).

# *Interceptor Well:* In the context of the Delta Wetlands Project, a pumped well located on an island levee for controlling groundwater flow off the island.

# *Interceptor-Well System:* A seepage-control system that would consist of actively pumped wells installed in the exterior levees of the reservoir islands in locations where substantial seepage to adjacent islands is predicted to occur.

# *Levee Crest*: The top of a levee.

# *Liquefaction:* The process in which loose saturated soils lose strength when subject to seismic activity (i.e., shaking).

# *Overtopping:* Passing of water over the top of a levee as a result of wave runup or surge action.

# *Passive-Flow Relief-Well System:* A system of wells that passively relieve elevated hydrostatic pressures in an aquifer by allowing flow to the surface. (Hydrostatic pressure is the pressure exerted by a liquid, such as water, at rest.)

# *Phreatic:* Of or pertaining to groundwater.

# *Phreatic Surface:* The surface of a body of unconfined groundwater at atmospheric pressure.

# *Piezometer:* A sandpipe monitoring well used to measure the depth to the groundwater surface in the aquifer.

# *Piping:* The removal of fine soil particles from the soil mass by high hydraulic gradients. For example, excessively high exit hydraulic gradients at the surface may cause upward transport of soil, resulting in sand boils.

# *Rock Revetment:* A stone covering used to protect soil or surfaces from erosion by water or the elements. Also referred to as riprap.

# *Seepage:* A slow movement of water through permeable soils caused by increases in the hydraulic head (see "hydraulic head" above).

# *Seepage Flux:* The rate of flow of water across a given line or surface, typically expressed in gallons per minute (gpm) or cfs.

# *Settlement:* The sinking of surface material as a result of compaction of soils or sediment caused by an increase in the weight of overlying deposits, by pressure resulting from earth movements, or by the removal of water from the soil or sediment.

# *Slope Deformations:* Changes in the shape or size of a slope.

# *Splash Berm:* An extended area of facing on an island levee designed to protect against erosion of the levee crest by wave splash and runup.

# *Stratigraphy:* The composition, characteristics, distribution, and age relation of layered rocks and soils.

# *Toe Berm:* The section projecting at the base of a dam, levee, or retaining wall.

# *Wave Runup*: The vertical height above stillwater level to which water from an incident wave will run up the face of a structure.

# *Wind Fetch:* An area of water over which wind blows, generating waves.

# *Yield Acceleration:* Pseudostatic horizontal force that will give a calculated factor of safety of 1 in slope-stability analyses.

## NEW INFORMATION PRESENTED IN THE 2000 REVISED DRAFT EIR/EIS

Information used to prepare the discussion of levee stability and seepage in the 2000 REIR/EIS was summarized from URS's report of new technical analyses of Delta Wetlands' proposed levee design and seepage-control system (Appendix H of the 2000 REIR/EIS) and from testimony presented at the water right hearing. Information on boat-wake-induced erosion is based on a literature review and discussion with knowledgeable individuals.

### Results of the New Analysis of Delta Wetlands Project Effects on Seepage

As described previously in this chapter and confirmed by the URS seepage analysis, Delta Wetlands Project operations would increase the potential for seepage onto islands adjacent to the reservoir islands. These seepage effects would occur because deep sand aquifers underlie the reservoir islands and adjacent islands, as well as the channels or sloughs separating them. Storing water on the reservoir islands would increase the elevation of the phreatic (i.e., groundwater) surface and the hydraulic pressure on the aquifer, thereby inducing seepage through the sand aquifer onto the neighboring islands.

Delta Wetlands considered several technically feasible methods for controlling seepage onto the adjacent islands. These measures include pumping from reservoir island levees, pumping from levees of adjacent islands, using passive or active relief wells or trenches on adjacent islands, and using a continuous cutoff wall in the reservoir island levees. Installing seepage control measures on the adjacent islands may be hydraulically more efficient because it would require less pumping. However, these potential solutions would require permission from neighboring reclamation districts and property owners. A continuous cutoff wall may be used, but this is not the preferred seepage control method because it is costly. Delta Wetlands has proposed to install a system of interceptor wells on the reservoir island levees to control seepage because installing such a system would not require permission from adjacent reclamation districts and property owners.

The following discussions summarize URS's seepage analysis methodology and the findings of the analysis; where appropriate, references are given to specific sections of URS's analysis (Appendix H of the 2000 REIR/EIS).

**Seepage Analysis Methodology**

Previous analyses prepared by Delta Wetlands' consultants (Hultgren and Tillis, Harding Lawson Associates, and Moffatt & Nichols) used a two-dimensional finite element model (SEEP) to evaluate seepage conditions and used plan-view modeling techniques to assess the impacts of borrow pits on seepage and on pumping rates. Plan-view modeling considered only horizontal seepage within the sand aquifer, where most seepage would occur. This approach does not include seepage through other elements of the subsurface strata or the effects of vertical infiltration from the storage reservoirs or adjacent channels. Consequently, the plan-view modeling approach does not adequately simulate the localized seepage conditions near the proposed interceptor-well system. Delta Wetlands plans to use the SEEP model in its final design for the seepage control system.

To better evaluate the performance of the proposed interceptor-well system, URS used a two-dimensional finite element model (SEEP/W) (Geo-Slope International Ltd. 1994) for two cross sections each of Bacon Island and Webb Tract. The cross sections were selected based on available data to be conservative and reasonably representative of relatively high seepage conditions that would be encountered on the reservoir islands. The two-dimensional modeling approach considers all major elements of subsurface stratigraphy and vertical infiltration from the reservoir islands and channels.

The following parameters deemed critical for the evaluation of seepage effects of reservoir operations were considered in the URS analysis:

# average total hydraulic head in the sand aquifer near the levee centerline on a reservoir island,

# seepage flux (seepage flow through a vertical section) near the project-island levee centerline,

# average total hydraulic head in the sand aquifer at an adjacent-island levee,

# seepage flux at the centerline of the adjacent-island levee, and

# water-table level at the far inland toe of the adjacent-island levee.

No site-specific investigation or testing was performed as a part of the URS analysis. The lead agencies considered the previously collected soil profiles adequate for the level of analysis presented in the 2000 REIR/EIS. The characterizations of soils, levee properties, seismic setting, and hydraulic and hydrologic conditions were based on available data, publications, and professional engineering judgment and experience. As discussed in Appendix H of the 2000 REIR/EIS, significant additional detailed predesign soil profiling and analysis will be required before construction.

The model input parameters, calibration, and sensitivity analyses are described in Section 2, "Seepage Issues", of Appendix H of the 2000 REIR/EIS.

**Ability of a Pumped-Well System to Control Groundwater Seepage**

Using the SEEP/W model, URS evaluated three conditions:

# existing seepage conditions,
# a full reservoir with no interceptor well pumping, and
# a full reservoir with pumping.

The analysis determined that a pumped-well system (i.e., the proposed interceptor-well system) with wells spaced at 160 feet on center and a pumping rate of 5 to 12 gpm, depending on local conditions, would be adequate to maintain seepage at existing levels beneath the levees on adjacent islands (Table 2.3.2 of Appendix H). For both Webb Tract and Bacon Island, URS notes that the interceptor well system should extend to the bottom of the sand aquifer, the pumping well should be screened over the entire length of the aquifer to achieve the required drawdown at the well, and the pumps should be sized to efficiently handle the required pump rate.

URS concluded that the interceptor-well system of seepage control as proposed by Delta Wetlands "appears effective to control undesirable seepage effects" and that "a properly functioning interceptor well system can be used to minimize the effects of the proposed reservoirs on adjacent islands, including the potential for rises in the groundwater table or flooding". The summary of findings also notes that the proposed spacing of 160 feet between interceptor wells appears to be adequate. The findings indicate that spacings and pumping rates will be more precisely defined for each levee section during the final design of the project and note that adjustments in the design of the interceptor-well system will be required to accommodate varying site-specific conditions. Following detailed investigations of subsurface conditions, adjustments in the well interceptor system design will be required to accommodate varying conditions, ranging from areas where little or no pumping may be needed to areas where pumping rates may be much higher than is typical (e.g., along localized gravelly portions of the aquifer). For example, previous studies have shown variations in the hydraulic conductivity of the sand aquifer up to five to six times those used in the URS analyses. Such a higher conductivity could require pumping rates of as much as 50 to 60 gpm in some portions of the reservoir levee pump field for wells spaced at 160 feet to maintain seepage at existing levels. (See Sections 2.3.5 and 4.1 of Appendix H.)

**Long-Term Reliability of the Proposed Interceptor-Well System**

Delta Wetlands' geotechnical consultants conducted a series of demonstration projects on McDonald Island in 1990 to show the effectiveness of a pumped-well system and a passive-flow relief-well system in lowering the hydraulic head in the sand aquifer. Mildred Island, located immediately west of McDonald Island, has been flooded since 1983. The analysis showed that both a pumped-well system and a passive-flow relief-well system reduced the hydraulic head, but that the passive-relief system resulted in less drawdown. Evidence was presented in water right hearing testimony that McDonald Island land became saturated and unfarmable after the demonstration projects were completed. Delta Wetlands' geotechnical consultant Ed Hultgren testified, however, that the relief wells became less effective with time as they became clogged with silt. Hultgren added that the demonstration wells were constructed for the demonstration project only, not for long-term use, and that when the demonstration projects were complete, the wells were not maintained.

URS reviewed the previously prepared reports and generally concurred with their findings that the drawdown test on McDonald Island showed:

# the interceptor-well system could be effective in controlling seepage, and

# an interceptor-well system installed on the perimeter of the reservoir islands could be a viable system to control the seepage into the neighboring islands.

URS also concluded, however, that the McDonald Island demonstration projects show that final design and proposed maintenance programs must address the potential migration of fine materials from the sand aquifer to a pumped-well system (Section 2.2.7 of Appendix H). Migration of fine materials from the

sand aquifer could decrease the efficiency of the wells and could result in subsidence or slumping of the levees (see "Effect of the Interceptor-Well System on Levee Stability" below.) Regular performance monitoring, maintenance, and "redevelopment" (cleaning) of the wells will be required to ensure long-term effectiveness of the proposed interceptor-well system. The report states the following (Section 2.5 of Appendix H):

- The design of the well screen and surrounding gravel pack will need to accommodate the grain sizes of the aquifer.

- The perforated section of the well casing should stay submerged (i.e., should not extend above the elevation of the deepest expected drawdown of the water table) to minimize the possibility of fouling of the screen by organic growths.

- It would be useful for the individual wells to be equipped with flow meters so that any dropoff in output can be identified.

- It would be necessary, during the final design, to evaluate the likelihood of power outages and their consequences on seepage control and to consider whether providing standby generators would be advisable.

**Adequacy and Effectiveness of the Proposed Seepage Monitoring Program**

Delta Wetlands has proposed a monitoring program to ensure that there is no net seepage onto adjacent islands. The proposed monitoring program includes hourly measurements of water levels in seepage monitoring wells (i.e., piezometers), background monitoring wells, and adjacent sloughs and channels. The seepage and background monitoring wells are located on the levees of islands adjacent to the reservoir islands; the locations proposed by Delta Wetlands for Alternatives 1 and 2 are shown in Figure 3D-3. Delta Wetlands proposes to implement additional seepage control measures if the monitoring data indicate that water levels in the seepage monitoring wells have exceeded performance standards and the increased seepage is attributable to reservoir-island filling. URS reviewed the monitoring program and determined that it is appropriate in concept, but recommends modifying the program as follows (Section 2.4 of Appendix H):

- The background monitoring wells should be at least 1,000 feet from the nearest seepage monitoring wells.

- More than one background monitoring well should be used for each row of seepage monitoring wells.

- At least 1 year of data should be used to establish reference water levels in the background monitoring wells and in at least half of the seepage monitoring wells before reservoir operations begin.

- A running straight-line mean from the monitoring well data should be used in the application of the seepage performance standards.

- The seepage performance standard of 1 foot should be reduced to 0.5 foot for the single-well condition.

# The seepage performance standards should be reevaluated periodically after reservoir operations begin.

Additionally, URS notes that the proposed seepage monitoring system does not account for the relationship between groundwater elevations and seasonal or local variation within each adjacent island. Local conditions could include changes in groundwater levels attributable to local pumping for farming operations. To monitor trends in groundwater management on the neighboring islands, URS recommends that Delta Wetlands supplement the proposed background well system with in-field monitoring wells installed across each neighboring island. These additional wells would be placed one-half mile to 1 mile apart, beginning near the levee adjacent to the reservoir island and continuing across the adjacent island, so that groundwater levels at increasing distance from the reservoir island can be compared. During final design, the specific location and spacing of these wells would be finalized based on groundwater conditions in each neighboring island.

**Water Diversion onto the Storage Islands through Interceptor-Well Pumping**

Under certain water-level conditions in the reservoir islands and adjacent channels, water from adjacent channels could be inadvertently diverted onto the reservoir islands through operation of the interceptor-well system or direct seepage. Using the SEEP/W model, URS evaluated the volume of seepage and the rate of interceptor-well pumping under full-reservoir conditions. For this evaluation, it was assumed that water pumped from the interceptor wells would be returned to the reservoirs. The study concluded that if Delta Wetlands operated the seepage-control system at the minimum rate necessary to prevent net seepage on adjacent islands, the simulated flux of water from the slough toward the reservoir islands would be about the same as the flux under simulated existing conditions for most locations and would constitute approximately 8% of the total water pumped from the wells (Section 2.6 of Appendix H). The proposed seepage monitoring program could be used in conjunction with pumping-rate monitoring to determine the volume of channel water being pumped onto the reservoir through the interceptor-well system or through direct seepage.

**Adequacy of Borrow-Area Setbacks**

URS used the SEEP/W model to evaluate whether Delta Wetlands' proposed borrow-area setbacks would be adequate to prevent excessive seepage increases in the underlying sand aquifer. URS concluded that borrow areas located 400 feet from the toe of the reservoir island levees would have an insignificant effect on the total hydraulic head conditions within the sand aquifer near the levees or the required pump rate at the interceptor-well system. The modeling showed that setting the borrow area back 800 feet from the levee in accordance with USACE standards would result in no effects on seepage conditions or operation of the interceptor-well system (Section 2.3 of Appendix H).

**Effects of Rapid Changes in Reservoir Water Levels on Settlement of Island Interiors**

URS evaluated the conceptual mechanisms that would lead to land-surface subsidence on the interiors of the reservoir islands and concluded that additional settlement caused by operation of the Delta Wetlands Project would be nominal. The weight of water stored on the reservoir islands would compact the soil and lead to settlement of the reservoir island interiors. The evaluation determined that project operations would result in approximately 1 foot of additional settlement over the life of the project, with most soil compaction occurring during the first year of water storage operations. This predicted settlement is only a

fraction of the land-surface subsidence that would be expected to occur if the existing agricultural practices are continued in the future. Under existing agricultural practices, land-surface subsidence would continue until all peat materials have oxidized, which would result in a long-term lowering of the ground surface of approximately 15 feet on Webb Tract and 10 feet on Bacon Island. (Section 2.7 of Appendix H.)

### Results of the New Analysis of Delta Wetlands Project Effects on Levee Stability

The four Delta Wetlands islands are bounded by "nonproject" levees. Federal "project" levees are maintained to USACE standards by the State of California or by local landowners under state supervision; nonproject levees are defined as levees constructed and maintained by local landowners and reclamation districts. Delta Wetlands' proposed improvements to its levees are described above under "Flood Control Features" and are summarized above under "Delta Wetlands' Proposed Levee Design and Seepage Control System". Placement of toe berm fill and fill on the levee slopes and crest would take place in stages to allow for consolidation of material. Delta Wetlands' proposed project includes regular inspection and maintenance of the levees.

The main objective of the levee-stability analysis performed by URS was to evaluate Delta Wetlands' proposed levee-strengthening method for the reservoir islands. The analysis focused on the static and dynamic slope stability of the proposed levee configuration. Other performance conditions were studied as well, including:

# load bearing capacity;
# slope deformations and settlement and their effects on levee stability; and
# potential effects associated with geologic and seismic hazards, such as liquefaction.

The following discussions summarize URS's methodology for analyzing levee stability and the findings of the analysis; where appropriate, references are given to specific sections of URS's analysis (Appendix H of the 2000 REIR/EIS).

### Methodology Used for the Levee Stability Analysis

For the evaluation of Delta Wetlands project effects on levee stability, URS reviewed published literature on peat soil as well as the geotechnical studies, including slope-stability analyses, previously prepared for Delta Wetlands by its own consultants. URS reviewed the assumptions and results of these studies and used information from these reports to develop the soil parameters included in its analysis.

The URS analysis considered both the dynamic and static stability of the proposed levee improvements by using four cross sections, two for each of the reservoir islands. The cross sections were selected to be reasonably representative of conditions that would be encountered on the reservoir islands, and that would represent conservative estimates for stability issues. (Some cross sections were therefore different from the cross sections used for the seepage analysis, which were selected to allow for conservative analysis of seepage effects.) The analysis considered the potential for failure of the slope toward the island and the slope toward the slough. For both slopes, the following cases were considered:

# existing conditions;

# the end of construction (i.e., soil-consolidation condition);

# long-term conditions;

# sudden drawdown (i.e., an emergency evacuation of stored water); and

# pseudostatic conditions (i.e., the stability of the slope during seismic loading, which is analyzed to determine yield acceleration and estimate earthquake-induced deformation).

**Static Stability Analysis.** URS analyzed the static stability of levees using the limit equilibrium method based on Spencer's procedure of "slices" using the computer program UTEXAS3 (Wright 1991). The program iteratively balances the FS and the side force inclination until both force and moment equilibrium forces are satisfied. The UTEXAS3 model can simulate rapid undrained loading that follows a period of soil consolidation (end of levee construction) and rapid drawdown (emergency evacuation of stored water). Section 3, "Slope Stability Issues", of Appendix H details the review of previous studies and describes selected parameters and methods used in this analysis.

**Dynamic (i.e., Seismic) Stability Analysis.** For the evaluation of seismically induced levee deformations and geologic hazards, URS reviewed previous ground-motion studies for the project area, developed and updated dynamic soil parameters based on recent findings and published data, and developed design earthquake ground motions based on horizontal earthquake acceleration time histories recorded during the 1992 Landers and 1987 Whittier Narrows earthquakes. Results from the recent CALFED study on seismic hazards and probability of levee failure in the Delta (CALFED Bay-Delta Program 1999b) were used to construct the design response spectrum.

The design earthquake ground motions developed for the analysis used a hazard exposure level corresponding to a 10% probability of exceedance in 50 years; this level corresponds to a return period of about 1 in 475 years and is consistent with the requirement adopted by the 1997 Uniform Building Code. Dynamic responses and deformations of the levee induced by the design earthquake motions were computed for the long-term levee conditions at two cross sections each for Webb Tract and Bacon Island. The seismically induced geologic hazards assessed for the analysis included liquefaction, loss of bearing capacity, settlement, and levee overtopping. The evaluation also considered wave-height estimates and erosion, borrow requirements, and the effect of interceptor wells on slope stability. The literature reviewed and methods used for this analysis are described in Appendix A to the URS report (see Appendix H of the 2000 REIR/EIS).

## Effect of Delta Wetlands Operations on Levee Stability

In the 1995 DEIR/EIS, levee improvements were estimated to increase the long-term FSs in comparison with existing conditions, resulting in a beneficial effect. Independent review of levee stability issues by URS verified that Delta Wetlands' proposed levee improvements would increase the long-term FS toward the reservoir islands in comparison with existing conditions but determined that the long-term FS toward the slough would decrease (Table 3D-6).

The URS evaluation also found that, compared with existing conditions, the FS toward the reservoir islands would decrease for both the end-of-construction case and the sudden drawdown condition. (Section 3.5 of Appendix H.)

The "end-of-construction" results presented in Table 3D-6 represent conditions after construction of levee improvements in a single stage; the single-stage analysis was conducted to demonstrate that the levees cannot be constructed in a single stage. Delta Wetlands has proposed to construct the levees in

multiple stages to facilitate consolidation of levee materials. Delta Wetlands has proposed two conceptual land-side levee slope configurations—a 3:1 initial slope flattening to a 10:1 slope or a uniform 5:1 slope (Figure 3D-2). The uniform 5:1 slope fill configuration results in a lower end-of-construction FS than the 3:1-to-10:1 fill configuration, so Table 3D-6 presents the FS results for the uniform 5:1 slope configuration to provide the most conservative estimates of levee stability.

The seismic-stability evaluation of the reservoir island levees indicated that as much as 2 feet of deformation on the reservoir side of the levees and 4 feet on the slough side could be experienced during a probable earthquake in the region (Section 3.6 of Appendix H). Stability is improved from existing conditions on the reservoir side and is less than existing conditions on the slough side.

With regard to levee stability, URS concluded that the "levee strengthening measures conceptually proposed by Delta Wetlands are generally appropriate and adequate to provide stability of the reservoir islands' levees". The report notes that construction of the levee-strengthening fills must be implemented in carefully planned staged construction to prevent stability failures to the new fill loads. URS estimated that construction of the levees could take 4 to 6 years, depending on final levee design. The report also outlines conceptual measures that would improve the long-term stability of the slough side of the levees, improve stability under sudden drawdown conditions, and mitigate slough-side deformation under seismic conditions. Delta Wetlands plans to implement detailed subsurface exploration programs along the reservoir island levees, stability evaluations, and site-specific design and construction methods as part of final design. The report concludes that these steps will be essential to achieving safety and effectiveness of the proposed levee system. (Section 4.2 of Appendix H.)

**Effect of the Interceptor-Well System on Levee Stability**

As discussed previously, a network of interceptor wells would be used to control seepage onto adjacent islands. Delta Wetlands has suggested that these wells would probably be 6 inches in diameter and spaced approximately 160 feet on center. A 6-inch-diameter well could require drilling a 12-inch-diameter space to accommodate the well and packing. URS determined that the wells would not substantially affect stability of the levees or the supporting levee foundation because the area occupied by the wells is so small compared to the area occupied by the levees.

A high rate of continuous pumping in the interceptor wells can result in the migration of fine materials from the sand aquifer, which can cause internal erosion or piping in the levee material, and over time, lead to weakened levee foundations and potential settlement and stability problems. URS recommends that to minimize the risk to levee stability from excessive migration of fine-grained material from the aquifer, Delta Wetlands should:

# monitor individual wells' flows to judge well pumping efficiency (an indicator of internal soil erosion);

# redevelop (i.e., clean) the wells periodically or in response to flow monitoring that indicates a drop in well efficiency; and

# in severe cases, abandon and rebuild the well. (Section 3.10 of Appendix H.)

Delta Wetlands may be required to identify the criteria by which they would judge when an interceptor well would need to be replaced.

**Wave Runup and Erosion**

The proposed flooding of reservoir islands could result in wave runup on the interior levee slopes because of the long wind fetch across the islands, the water depths during storage, and wind conditions. Longer wind fetch, deeper water, and faster winds increase wave height. Delta Wetlands estimated wave runup on the reservoir islands and is proposing to include erosion protection on the interior levee slopes. These slopes would be protected from erosion by conventional rock revetment (i.e., riprap) or other conventional systems, such as soil cement or high-density polyethylene liner. During final design, site-specific requirements for erosion protection will be evaluated and riprap or other suitable erosion protection measures will be designed for each levee section. Delta Wetlands is also proposing an erosion monitoring program, which includes weekly inspections of levees and maintenance measures to address potential erosion problems.

URS completed an independent analysis of wave runup to evaluate freeboard and erosion potential of the reservoir island levees (see Section 3.8 in Appendix H). The analysis used the most severe wind conditions in the area (i.e., 60 miles per hour in fall), the longest wind fetch on Bacon Island and Webb Tract (i.e., 3.15 miles and 2.83 miles, respectively), and full storage conditions to represent worst-case wave runup potential. Both the 3:1 and 5:1 levee slope configurations were evaluated. The results of the analysis are shown in Table 3D-7. URS concluded that these results are consistent with the wave runup estimates published in DWR Bulletin 192-82. The proposed reservoir island levees will have an interior slope freeboard of 3 vertical feet (Figure 3D-2) and, as described above, will include placement of riprap on the interior slopes. As shown in the table, the estimated worst-case runup could result in overtopping if a 3:1 levee design is used. However, the analysis concludes that the proposed flatter (5:1) levee slope would reduce wave runup and avoid overtopping under the worst-case conditions. The final design of the levee will consider the potential for wave runup, and Delta Wetlands will implement a final levee design according to those site-specific conditions. Additionally, during project operations, the erosion monitoring program would be implemented. In conclusion, wave runup will not result in substantial erosion or overtopping of the proposed levees on the reservoir islands.

**Potential Damages to Adjacent Islands in the Event of a Reservoir Island Levee Failure**

Although a worst-case, or catastrophic-failure, analysis is not required under NEPA or CEQA, the USACE and SWRCB asked URS to evaluate the potential for damages to neighboring Delta islands in the event that a reservoir island levee failed.

URS's levee stability analysis indicates that failure of a Delta Wetlands Project levee is unlikely, but that the most probable types of failure are:

# failure of a reservoir island levee toward the adjacent channel or slough with a full reservoir,

# failure of the levee into the reservoir island with the reservoir low or empty, and

# failure of an adjacent island's levee caused by seepage effects attributable to reservoir operations.

To evaluate the potential effects of a levee breach under full reservoir conditions, URS performed hydraulic analyses assuming breach widths (i.e., lengths of failed levee) of 40, 80, 200, and 400 feet. Assuming that the reservoir was full at the time of a breach, URS determined that the maximum velocity of water on the bank opposite the breach would be 2, 9, 12, and 16 fps, respectively. The maximum breach

width of 400 feet would result in a maximum discharge rate of 123,000 cfs. Figure 3.5.47 of Appendix H shows the velocity distribution of flows under this failure scenario. The maximum velocity on the opposite bank would be approximately 16 fps for 30-40 minutes. It is expected that the riprapped levee would be able to withstand these velocities, although floating structures and moored boats might be damaged (Section 3.5.4 of Appendix H).

The analysis concluded that the proposed conceptual levee design would provide adequate protection against failure of the reservoir levee with the reservoir empty, with high FSs for long-term failure into the reservoir island and adequate FSs for sudden drawdown at most locations. The report notes that adjustments to levee geometry may be needed at some locations to provide an adequate FS during sudden drawdown (Section 3.5.4 of Appendix H).

Failure of an adjacent island's levee caused by seepage effects attributable to reservoir operations is addressed by the seepage analysis.

### New Information on Erosion Effects of Boat Wake

After the 1995 DEIR/EIS was released, the lead agencies received comments from several parties about the impacts on Delta island levees of increased boat wake that could result from increased boating activity if the proposed project were implemented. As described in Chapter 2, "Delta Wetlands Project Alternatives", Delta Wetlands has removed construction of recreation facilities from its CWA permit applications; nevertheless, the analysis of impacts on levee stability and seepage associated with construction and operation of these facilities is presented in this chapter. The lead agencies believed it would be helpful for reviewers to be given information about this subject, and directed that such information be included in this revised chapter on levee stability and seepage. Concerns about potential boat-wake impacts relate to the potential contribution of increased wake action to significant levee erosion and the erosion of channel islands and water-side habitats.

A literature search and conversations with knowledgeable individuals indicates that there are no current data related to wake-action impacts on channel islands. In the 1970s, the California Department of Navigation (now the California Department of Boating and Waterways) and DWR conducted two studies; however, these studies were based on unsubstantiated assumptions and reported conflicting findings, and are not reliable sources of information. The California Department of Boating and Waterways is currently conducting a 6-year study with Scripps Institute of Oceanography that addresses wake-action impacts; the study has not been completed.

Margit Aramburu, executive director of the Delta Protection Commission; Don Waltz, chief of the Facilities Division of the California Department of Boating and Waterways; and Ron Flick, research associate at Scripps Institute of Oceanography and staff oceanographer for the California Department of Boating and Waterways, were each contacted for information on this issue during April and May 1999. Each indicated that impacts of boat wakes on Delta islands are difficult to generalize. They explained that impacts vary according to several factors related to boat use, including boat size, boat speed, proximity of boats to the islands, and type of boating activity, and that these factors should be considered with others such as currents and the presence of wind-blown waves.

Because of the lack of data to quantify the relationship between boating and wake effects, it is not currently possible to estimate the erosion or habitat effects of increased wake action resulting from increased boating use of Delta waterways under the proposed project. However, the potential for such effects are

recognized. This issue was considered during the endangered-species consultation between the EIR/EIS lead agencies and DFG, NMFS, and USFWS. As a result, the FOC terms developed in the consultation process include a measure (number 53) specifically intended to mitigate boat-wake effects. Under this term, Delta Wetlands is required to contribute a set fee for each boat berth added to any of the project islands beyond pre-project conditions; these funds would be used for aquatic habitat restoration (see also page 55 of the DFG biological opinion in Appendix C of the 2000 REIR/EIS). This measure is in addition to the requirement that Delta Wetlands mitigate the effects of project construction and operations on aquatic habitat and shallow shoal habitat. The FOC terms have been adopted as part of the federal and state biological opinions for Delta Wetlands Project effects on listed fish species, and Delta Wetlands is required to incorporate these terms into the proposed project. Additional mitigation has been recommended to reduce the magnitude of project effects on boat wake. For more information, see Chapter 3J, "Recreation and Visual Resources".

## IMPACT ASSESSMENT METHODOLOGY FOR THE 2000 REVISED DRAFT EIR/EIS

### Analytical Approach and Impact Mechanisms

Impacts on seepage and levee stability were assessed based on the ways in which construction and operation of the Delta Wetlands project alternatives would affect seepage on adjacent islands and levee stability. Effects of the project alternatives on seepage and levee stability were based on previous work prepared by Delta Wetlands' consultants and new technical analyses prepared by URS (Appendix H of the 2000 REIR/EIS).

### Criteria for Determining Impact Significance

An alternative is considered to have a significant impact on seepage or levee stability if it would:

# induce additional seepage on adjacent islands when compared to no-project conditions,

# decrease levee stability on the Delta Wetlands Project islands during or immediately following project construction,

# decrease long-term levee stability when compared to existing levee conditions, and

# cause property damage in the event of levee failure.

### Levee Standards and Significance Criteria

During and subsequent to the water right hearing, parties expressed an interest in using existing levee standards as a significance criterion in the levee stability analysis or in identifying which standard or standards would be applied to the Delta Wetlands Project. Table 3D-8 summarizes standard FSs for various levee or dam conditions, as adopted or recommended by USACE, DWR, and the Division of Safety of Dams (DSOD). FSs are only one element used to regulate levees and dams; other design considerations are also

used. Figure 3D-7 compares different levee standards for minimum freeboard, maximum slopes, and crest width. As shown in Table 3D-8 and Figure 3D-7, USACE has published standards and guidelines for project and nonproject levees, DWR has published guidelines for levee rehabilitation in the Delta, and DSOD establishes standards for dams.

The purpose of the impact assessment is to determine the difference in levee stability between existing conditions and with-project conditions. The relative change in the FSs between the project and existing conditions is used as the basis for evaluating the impact of the proposed project. Because the analysis evaluates the *change* in levee conditions, a given FS standard cannot be used to determine the significance of the change. However, these standards would be considered during project approval and final design.

The USACE and SWRCB can choose to adopt a given standard to be applied to the final levee design for the Delta Wetlands islands. Because the Delta Wetlands levees are nonproject levees, rehabilitation of those levees under existing conditions would follow DWR and USACE's recommendations for nonproject levees. Delta Wetlands has committed to improving levees on all four project islands to meet levee design criteria for Delta levees identified in DWR Bulletin 192-82; Bulletin 192-82 does not include FS but requires a given levee design (Figure 3D-7). The USACE and SWRCB, however, may include more conservative standards or guidelines for the reservoir island levees in the terms and conditions of project approval.

Additionally, if the levees are determined to be "dams" as defined by the California Water Code (Sections 6002 through 6008), Delta Wetlands would be required to meet DSOD's standards and design review requirements. DSOD has oversight and approval authority for structures that are considered dams under the Water Code. Dams under jurisdiction are artificial barriers that are at least 25 feet high or have an impounding capacity of at least 50 af. However, Water Code Section 6004(c) provides the following exclusion for structures in the Sacramento-San Joaquin Delta:

> The levee of an island adjacent to tidal waters in the Sacramento-San Joaquin Delta, as defined in Section 12220, even when used to impound water, shall not be considered a dam and the impoundment shall not be considered a reservoir if the maximum possible water storage elevation of the impounded water does not exceed four feet above mean sea level, as established by the United States Geological Survey 1929 Datum.

Therefore, if the Delta Wetlands levee structure is built to impound water to a level of 6 feet above mean sea level as proposed and evaluated in this document, it would be considered a dam within DSOD jurisdiction and would be subject to DSOD review and permit approval. The levees would be required to meet DSOD standards for dams (Table 3D-8). Delta Wetlands would submit final design drawings, specifications, geotechnical reports, survey data, and an application to DSOD for approval before levee construction (Driller pers. comm.).

## ENVIRONMENTAL CONSEQUENCES

The following section addresses project impacts on seepage and levee stability. The text addresses the four criteria listed above that are used to determine significance. Table 3D-9 compares the 1995 DEIR/EIS and 2000 REIR/EIS impact conclusions.

### Potential Seepage on Adjacent Islands Resulting from Project Operations

As described in previous sections of this chapter, operation of the Delta Wetlands Project would induce seepage on adjacent islands if seepage control measures were not implemented. The Delta Wetlands Project includes a network of pumped wells to control seepage and a seepage monitoring program. It also has a set of seepage performance standards that, if exceeded, would trigger implementation of other measures to control seepage, including drawdown of the reservoir islands' water levels. Independent review of the seepage control program, seepage monitoring program, and performance standards by URS (Appendix H of the 2000 REIR/EIS) indicated that the proposed seepage control program could effectively control the seepage onto adjacent islands. However, the review also indicated that the seepage monitoring program and performance standards might not provide adequate warning that an adverse effect was about to occur and might not trigger additional mitigation measures in a timely enough manner to prevent adverse effects on adjacent islands. Therefore, potential seepage on adjacent islands is considered significant and the following mitigation is recommended.

**Mitigation Measure RD-2: Modify Seepage Monitoring Program and Seepage Performance Standards.** URS has recommended that the seepage monitoring program and the seepage performance standards be modified to include the following requirements:

# Locate the background monitoring wells at least 1,000 feet from the nearest seepage monitoring wells.

# Use more than one background monitoring well for each row of seepage monitoring wells.

# Use at least 1 year of data to establish reference water levels in all the background monitoring wells and in at least half of the seepage monitoring wells.

# Use a running straight-line mean from the monitoring-well data when applying the seepage performance standards.

# Reduce the seepage performance standard for the single-well condition from 1 foot to 0.5 foot.

# Reevaluate seepage performance standards 2, 5, and 10 years after reservoir operations begin and then every 10 years.

Implementing the recommended changes to the seepage monitoring program and seepage performance standards would reduce this impact to a less-than-significant level.

### Potential Decrease in Levee Stability on the Delta Wetlands Project Islands during or Immediately after Project Construction

As described earlier in this chapter, levee improvements would be completed in layers or lifts less than 5 feet thick and allowed to settle to ensure that an appropriate FS would be maintained. Delta Wetlands estimated that it would take several years to complete levee improvements. Independent review of levee stability issues by URS verified that levee improvements could not be completed in a single lift. As shown in Table 3D-6, if the levees were constructed in a single lift, the FSs would be less than 1, indicating that the levees would not be strong enough to support their own weight. The levee construction methods described

above under "Flood Control Features" are adequate to maintain an appropriate FS; therefore, this impact is considered less than significant and no mitigation is required.

### Potential Decrease in Long-Term Levee Stability on the Delta Wetlands Reservoir Islands

In the 1995 DEIR/EIS, levee improvements were estimated to increase the long-term FSs when compared to the existing conditions, resulting in a beneficial effect. Independent review of levee stability issues by URS (Appendix H of the 2000 REIR/EIS) verified that levee improvements would increase the FSs toward the reservoir islands when compared to the existing conditions. As shown in Table 3D-6, the long-term FS toward the reservoir islands at the cross sections evaluated would increase by 27 to 36 percent. However, the long-term FS toward the slough would decrease by 10 to 17 percent when compared to existing conditions. URS suggests that slough-side levee improvements would achieve an appropriate FS with the proposed levee design. However, slough-side levee improvements would have substantial adverse environmental effects (e.g., significant fishery habitat and water quality impacts); consequently, although slough-side levee improvements would be technically feasible, they would not be environmentally feasible or practical. This impact is considered significant and the following mitigation measure is recommended.

> **Mitigation Measure RD-1: Adopt Final Levee Design that Achieves Recommended Factor of Safety and Reduces the Risk of Catastrophic Levee Failure.** Delta Wetlands' final levee design shall provide a minimum FS of 1.3 in accordance with DWR's requirements for rehabilitating levees in the Delta (Table 3D-8). This recommended FS is more conservative than USACE's recommended 1.25 FS for nonproject levees. After detailed geotechnical studies have been completed to support the levee design efforts, it is anticipated that the conceptual levee design will be modified (e.g., change in slope, crest width, lift compaction, and other levee design and construction factors) to achieve the desired FS without affecting the existing levees' slough faces and incurring the significant environmental impacts.
>
> Alternately, at locations where there are no practical design options to achieve this FS, measures could be implemented to reduce the risk of catastrophic levee failure. URS has recommended increasing the width of the levee cross section to provide additional buffer if the slough side of the levee fails. The buffer would provide sacrificial material that could be allowed to erode until emergency action could be taken to restore levee integrity. Although this option would not improve the factor of safety, it would greatly reduce the risk of catastrophic failure.

### Potential Levee Failure on Delta Wetlands Project Islands during Seismic Activity

By improving the reservoir island levees, the stability of reservoir island levee slopes under seismic conditions would increase toward the reservoir island and would decrease toward the slough. Results of the dynamic stability analysis concluded that as much as 4 feet of levee deformation could occur under seismic conditions. This impact is considered significant. The following mitigation measure is recommended to reduce this impact to a less-than-significant level.

**Mitigation Measure RD-1: Adopt Final Levee Design that Achieves Recommended Factor of Safety and Reduces the Risk of Catastrophic Levee Failure.**

This mitigation measure is described above.

### Potential Property Damage Resulting from Levee Failure

Implementing the Delta Wetlands project would increase the levees' FS toward the reservoir islands and decrease their FS toward the adjacent sloughs when compared to existing conditions. Levee failure is unlikely, however, because the long-term FSs exceed 1 (Table 3D-6). Failure into the reservoir island with the project would have no greater effect on property than a failure under the existing conditions, although the risk of failure would be somewhat less because of increased long-term FSs.

URS evaluated the potential effects of a worst-case levee failure, a levee breach toward the slough when the reservoir islands are full. Hydraulic analyses were completed assuming breach widths of 40, 80, 200 and 400 feet. The maximum likely breach of 400 feet would result in a maximum discharge rate of 123,000 cfs. Figure 3.5.47 of Appendix H shows the velocity distribution of flows under this failure scenario. The maximum velocity on the opposite bank would be approximately 16 fps. Assuming the reservoir was at full storage (+6 feet) and the channel was at a relatively low tide (-2 feet) when the levee failed, the adjacent levees would experience the 16 fps velocity for approximately 30-40 minutes. The adjacent riprapped levee would be expected to withstand these velocities for the limited amount of time. Because the potential risk of a levee failure is very small, this impact is considered less than significant and no mitigation is required.

### Cumulative Impacts

Levee stability conditions in the Delta are expected to improve in the future through the implementation of levee improvements using existing and future state and federal funding and implementation of proposed projects under the CALFED Bay-Delta Program. Since 1988, federal, state, and local agencies have completed more than $160 million in improvements to Delta levees using Senate Bill (SB) 34 funds, Assembly Bill (AB) 360 funds, emergency levee repair funds for work performed by USACE under Public Law (PL) 84-99, and local funds (CALFED Bay-Delta Program 1999a). Improvements to Delta levees are ongoing. The CALFED Bay-Delta Program's Long-term Levee Protection Plan outlines a long-term strategy to reduce the risk of catastrophic breaching of Delta levees. The CALFED Levee Program includes a cost-sharing program to reconstruct Delta levees, the "Special Flood Control Projects" program to provide additional flood protection for key Delta levees that protect public benefits of statewide significance, improvements to existing emergency response capabilities, and development of a risk management strategy in response to the threat that earthquakes pose to Delta levees (CALFED Bay-Delta Program 1999b).

Implementing the Delta Wetlands Project would not contribute significantly to cumulative flood hazards in the Delta. The proposed project would improve long-term levee stability on the habitat islands and would improve long-term stability of the levee slope toward the reservoir islands. As described above, long-term stability toward the slough would be reduced on the reservoir islands; however, because the

resulting FS still would be greater than 1, the likelihood of levee failure under the proposed project is low. Additionally, analysis indicates that neighboring levees would not be significantly damaged if the levee failed when the reservoir was full. Therefore, the cumulative effect on levee failure in the Delta is considered less than significant and no mitigation is required.

### Impact Evaluation of Project Alternatives from the 1995 Draft EIR/EIS

As described in Chapter 2, the difference between Alternative 1 and Alternative 2 is water discharge operations. Consequently, the levee system and proposed seepage control plan are the same under Alternative 1 as under Alternative 2. The impacts and mitigation measures described above would also apply to both Alternative 1 and Alternative 2.

Under Alternative 3, water would be stored on all four islands, so levee improvements and seepage control measures would be implemented on all islands. Although the 2000 REIR/EIS did not analyze levee stability and seepage for Bouldin Island and Holland Tract, it can be reasonably assumed that the levee stability and seepage impact conclusions presented above for the proposed project would be similar to the findings for the other reservoir islands under Alternative 3.

## CITATIONS

### Printed References


Argent, G. 1988. Earthquakes: how water purveyors prepare. Western Water November/December 6-11.

Association of State Dam Safety Officials. 1989. Proceedings of dam safety workshop.

Bay-Delta Oversight Council. 1993. Draft briefing paper on Delta levee and channel management issues. December. California Department of Water Resources. Sacramento, CA.

California. Department of Water Resources. 1982. Delta levees investigation. December. (Bulletin 192-82.) Sacramento, CA.

_____. Department of Water Resources. 1988. West Delta water management program. Central District. Sacramento, CA.

_____. 1989. Miming geometry criteria for rehabilitating existing levees in Sacramento-San Joaquin Delta. Draft memorandum report. March.

_____. Department of Water Resources. 1990. Actions and priorities: Delta Flood Protection Act —eight western Delta islands. Sacramento, CA.

_____. Department of Water Resources. 1993. Sacramento-San Joaquin Delta atlas. Sacramento, CA.

CALFED Bay-Delta Program. 1999a. CALFED Bay-Delta Program draft programmatic environmental impact statement/environmental impact report. Prepared for the U.S. Bureau of Reclamation, U.S. Fish and Wildlife Service, National Marine Fisheries Service, U.S. Environmental Protection Agency, Natural Resources Conservation Service, U.S. Army Corps of Engineers, and California Resources Agency. (State Clearinghouse number 96032083.) Sacramento, CA.

_____. 1999b. Seismic vulnerability of the Sacramento-San Joaquin Delta levees. CALFED Bay-Delta Program draft programmatic environmental impact statement/environmental impact report technical appendix. Report prepared by the Levee and Channels Technical Team, Seismic Vulnerability Sub-Team. Sacramento, CA.

Geo-Slope International. 1991. SEEP/W, version 4: finite element seepage analysis program. Calgary, Alberta, Canada.

Harding Lawson Associates. 1989. Preliminary geotechnical investigation for the Delta Wetlands project. By K. Tillis, E. Hultgren, and C. Wood. February 15, 1989. (HLA No. 18749,001.03.) Concord, CA. Prepared for Delta Wetlands, Lafayette, CA.

_____. 1990a. Project status report: McDonald Island drawdown demonstration. By K. Tillis, D. Holloway, and E. Hultgren. February 22, 1990. (HLA No. 18749,013.03.) Concord, CA. Prepared for Delta Wetlands, Lafayette, CA.

_____. 1990b. Project status report: McDonald drawdown demonstration Phase II. By K. Tillis, D. Holloway, and E. Hultgren. November 19, 1990. (HLA No. 18749,013.03.) Concord, CA. Prepared for Delta Wetlands, Lafayette, CA.

_____. 1991. Seepage control program for the Delta Wetlands project. By D. Holloway, K. Tillis, and E. Hultgren. January 24, 1991. (HLA No. 18749,007.03.) Concord, CA. Prepared for Delta Wetlands, Lafayette, CA.

_____. 1992a. Seepage monitoring and mitigation for the Delta Wetlands project. By K. Tillis and E. Hultgren. January 8, 1992. (HLA No. 18749,007.03.) Concord, CA. Prepared for Delta Wetlands, Lafayette, CA.

_____. 1992b. Geotechnical investigation and design for the Wilkerson Dam on Bouldin Island. By K. Tillis, S. Vahdani, and K. Bergman. May 27, 1992. (HLA No. 11472-008.) Concord, CA. Prepared for Delta Wetlands, Lafayette, CA.

_____. 1992c. Wave erosion monitoring and mitigation for the Delta Wetlands project. By K. Tillis and E. Hultgren. January 6, 1992. (HLA No. 18749,007.03.) Concord, CA. Prepared for Delta Wetlands, Lafayette, CA.

_____. 1993. Geotechnical evaluation of perimeter levees, Delta Wetlands project: letter report. K. Tillis and E. Hultgren. November 16, 1993. Concord, CA. Prepared for Delta Wetlands, Lafayette, CA.

Moffatt & Nichol, Engineers. 1988. Delta Wetlands levee erosion protection system spending beach concept. September. Walnut Creek, CA. Prepared for Delta Wetlands, Lafayette, CA.

Northpoint Engineers. 1988. Topographic survey maps of the DW project islands. Vallejo, CA.

U.S. Army Corps of Engineers. 1978. Design and construction of levees, EM 1110-2-1913.

_____. 1988. Guidelines in rehabilitation of non-federal levees in Sacramento-San Joaquin legal Delta under provisions of PL 84-99, as amended. Memorandum to commander, South Pacific Division. March 24, 1988. Included in Appendix A to CALFED's levee system integrity program plan, June 1999.

U.S. Bureau of Reclamation. 1983. Predation of anadromous fish in the Sacramento River, California. Central Valley Fish and Wildlife Management Study. Special Report, March 1983.

U.S. Soil Conservation Service. 1989. Land subsidence in the Sacramento-San Joaquin Delta—literature review summary. December. Water Resources Planning Staff. Davis, CA.

Wright, S. G. 1991. UTEXAS3, a computer program for slope stability calculations (1990). Austin, TX. Revised July 1991.

**Personal Communications**

Driller, Mike. California Department of Water Resources, Division of Engineering. October 5, 1999—informal office memo to Cathy Crothers regarding the Delta Wetlands Project and responses to questions asked by Jones & Stokes regarding the Division of Safety of Dams. Distributed to Delta Wetlands parties October 14, 1999.

Forkel, David. Project manager. Delta Wetlands, Lafayette, CA. September 14 and October 5, 1988—letters; September 14, 1989—memorandum to John Winther.

Holmes, Howard. President, board of directors. Bethel Island Municipal Improvement District, Bethel Island, CA. March 21, 1991—letter to U.S.

Army Corps of Engineers regarding Public Notice 190100/804 Delta Wetlands draft EIR/EIS.

Hultgren, Edwin. Geotechnical engineer. Hultgren Geotechnical Engineers, Concord, CA. April 13, 1994—letter to Mary Novak at Ellison, Schneider & Lennihan, giving technical comments on administrative drafts of Chapter 3D; September 23, 1994—letter to Mary Novak at Ellison, Schneider & Lennihan, regarding drawdown rates on reservoir islands and impacts on levee stability.

Kjeldsen, Kenneth L. Consulting civil engineer. Kjeldsen-Sinnock & Associates, Inc., Stockton, CA. October 26, 1988, and September 1, 1989—telephone conversations.

Sinnock, Stephen K. Consulting civil engineer. Kjeldsen-Sinnock & Associates, Inc., Stockton, CA. October 21 and 26, 1988—telephone conversations.

Tillis, Kevin. Geotechnical engineer. Hultgren Geotechnical Engineers, Concord, CA. July 12, 1994—telephone conversation regarding drawdown analysis and "SEEP" modeling.

Wright, John F. Reclamation district engineer. Murray, Burns & Kienlen, Sacramento, CA. October 26, 1988, and September 1, 1989—telephone conversations.

Table 3D-1. Historic Flooding and Predicted Statistical Frequency of Levee Failures on the DW Islands

| Island | Years of Levee Failure Since 1932 | Predicted Failures per 100 Years: Under Existing Conditions | After 20 Years | After 40 Years |
|---|---|---|---|---|
| Bacon Island | None | 5.63 | 7.25 | 8.77 |
| Webb Tract | 1950, 1980 | 8.81 | 9.29 | 9.29 |
| Bouldin Island | None | 18.25 | 18.25 | 18.25 |
| Holland Tract | 1980 | 4.17 | 5.68 | 7.89 |

Source: DWR 1982.

Table 3D-2. Predicted Future Subsidence on the DW Project Islands

| Island | Subsidence since Reclamation (feet) | Estimated Maximum Thickness of Organic Soils (feet) | Estimated Future Rate of Subsidence (inches/year) | Predicted Additional Subsidence in Next 50 Years[a] (feet) | Predicted Island Botton Elevation by 2032[b] (feet) |
|---|---|---|---|---|---|
| Bacon Island | 18 | 18 | 3.0 | 13 | -31 |
| Webb Tract | 18 | 33 | 3.0 | 13 | -31 |
| Bouldin Island | 17 | 31 | 3.0 | 13 | -30 |
| Holland Tract | 16 | 24 | 3.0 | 13 | -29 |

[a] Base year is 1982; therefore, this table shows estimates of subsidence between 1982 and 2032.

[b] Predicted island bottom elevation is sum of "Subsidence since Reclamation" and "Predicted Additional Subsidence in Next 50 Years". Elevation is in relation to mean sea level.

Source: DWR 1982.

Table 3D-3. Expenditures for Emergency Levee Repairs (1980-1986) and Levee Maintenance (1981-1986) on the DW Project Islands ($1,000)

| Island (Reclamation District No.) | Nonproject Levee Mileage | Emergency Expenditures (1980-1986) | | | | Maintenance Expenditures (1981-1986) | | | Combined Expenditures | | |
|---|---|---|---|---|---|---|---|---|---|---|---|
| | | Federal[a] | State[b] | Local District | Total | State[c] | Local District | Total | Public | Local District | Total Expenditures |
| Bacon Island (2028) | 14.3 | 467 | 259 | 74 | 800 | 354 | 482 | 836 | 1,080 | 556 | 1,636 |
| Webb Tract (2026) | 12.8 | 14,537 | 6,846 | 582 | 21,965 | 12 | 25 | 37 | 21,395 | 607 | 22,002 |
| Bouldin Island (756) | 18.0 | 2,350 | 2,103 | 288 | 4,741 | 118 | 221 | 339 | 4,571 | 509 | 5,080 |
| Holland Tract (2025) | 10.9 | 6,655 | 1,837 | 177 | 8,669 | 59 | 91 | 150 | 8,551 | 268 | 8,819 |
| Total | 56.0 | 25,989 | 11,045 | 1,121 | 36,175 | 543 | 819 | 1,362 | 35,597 | 1,940 | 37,537 |

[a] Federal emergency expenditures through the Federal Emergency Management Agency (FEMA).

[b] State emergency expenditures under the Natural Disaster Assistance Act (NDAA).

[c] State maintenance expenditures under the Delta Levee Maintenance Subventions Program.

Source: DWR 1993.

Table 3D-4. Assumed Borrow Site Requirements for Alternatives 1 and 2

| | Borrow Quantity (cubic yards) | Borrow Site Configuration | | |
|---|---|---|---|---|
| | | Depth (feet) | Total Area (acres) | Average Size (acres) |
| **Perimeter levees** | | | | |
| Bacon Island | 330,000 | 5 | 41 | 10 |
| Webb Tract | 410,000 | 5 | 51 | 10 |
| Bouldin Island | 1,830,000 | 10 | 113 | 10 |
| Holland Tract | 250,000 | 5 | 31 | 10 |
| **Inner levees** | | | | |
| Bacon Island | 160,000 | 5 | 20 | 10 |
| Webb Tract | 600,000 | 5 | 74 | 10 |
| Bouldin Island | 400,000 | 5 | 50 | 10 |
| Holland Tract | 200,000 | 5 | 25 | 10 |
| **Total levee borrow** | | | | |
| Bacon Island | 490,000 | 5 | 61 | 10 |
| Webb Tract | 1,010,000 | 5 | 125 | 10 |
| Bouldin Island | 2,230,000 | 5 or 10 | 163 | 10 |
| Holland Tract | 450,000 | 5 | 56 | 10 |

Source: Forkel pers. comm.

Table 3D-5. Assumed Borrow Site Requirements for Alternative 3

| | Borrow Quantity (cubic yards) | Borrow Site Configuration | | |
|---|---|---|---|---|
| | | Depth (feet) | Total Area (acres) | Average Size (acres) |
| **Perimeter levees** | | | | |
| Bacon Island | 330,000 | 5 | 41 | 10 |
| Webb Tract | 410,000 | 5 | 51 | 10 |
| Bouldin Island | 1,830,000 | 10 | 113 | 10 |
| Holland Tract | 250,000 | 5 | 31 | 10 |
| **Inner levees** | | | | |
| Bacon Island | 160,000 | 5 | 20 | 10 |
| Webb Tract | 600,000 | 5 | 74 | 10 |
| Bouldin Island | 400,000 | 5 | 50 | 10 |
| Holland Tract | 200,000 | 5 | 25 | 10 |
| **DSOD levee borrow** | | | | |
| Bouldin Island | 8,900,000 | 30 | 184 | 184 |
| **Total levee borrow** | | | | |
| Bacon Island | 490,000 | 5 | 61 | 10 |
| Webb Tract | 1,010,000 | 5 | 125 | 10 |
| Bouldin Island | 11,130,000 | 5, 10, or 30 | 347 | 10 |
| Holland Tract | 450,000 | 5 | 56 | 10 |

Source: Forkel pers. comm.

Table 3D-6. Summary of Factors of Safety

| | Factor of Safety | | | | | | | |
|---|---|---|---|---|---|---|---|---|
| | Existing Conditions | | End of Construction[a] | | Long-Term | | Sudden Drawdown[b] | |
| Cross Section | Toward Island | Toward Slough | Toward Island | Toward Slough | Toward Island | Toward Slough | Toward Island | Toward Slough |
| Webb Tract (Station 160+00) | 1.24 | 1.29 | 0.62 | 1.29 | 1.57 | 1.12 | 0.88 | 1.12 |
| Webb Tract (Station 630+00) | 1.40 | 1.34 | 0.89 | 1.34 | 1.82 | 1.12 | 1.18 | 1.12 |
| Bacon Island (Station 25+00) | 1.23 | 1.48 | 0.90 | 1.48 | 1.63 | 1.33 | 1.07 | 1.33 |
| Bacon Island (Station 265+00) | 1.21 | 1.49 | 0.86 | 1.49 | 1.64 | 1.23 | 0.98 | 1.23 |

Notes:

[a] Represents conditions after construction of levee improvements in a single stage. It was assumed that at the end of construction, the toward-slough factor of safety would be the same as under existing conditions.

[b] Under the sudden-drawdown scenario, the toward-slough factor of safety would be the same as the long-term toward-slough factor of safety.

Source: Section 3, “Slope Stability Issues”, of Appendix H of this REIR/EIS.

Table 3D-7. Summary of Results from the Worst-Case Runup Analysis

| | Bacon Island | | Webb Tract | |
|---|---|---|---|---|
| | 5:1 interior levee slope | 3:1 interior levee slope | 5:1 interior levee slope | 3:1 interior levee slope |
| Wave runup without riprap (feet) | 4.0 | 6.4 | 3.8 | 6.1 |
| Wave runup with riprap[1] (feet) | 2.2 | 3.5 | 2.1 | 3.4 |
| Reservoir setup[2] (feet) | 0.4 | 0.4 | 0.3 | 0.3 |

Assumptions:
- Wind speed = 60 mph
- Fetch on Bacon Island = 3.15 miles
- Fetch on Webb Tract = 2.83 miles

Notes:

[1] If riprap is used on the bank slopes, the runup would be reduced to 55% of the estimated runup values.

[2] Reservoir setup is defined as a general tilting of the reservoir due to sheer stresses caused by winds.

Source: Appendix H.

Table 3D-8. Stability Criteria Adopted for Levees and Used for Dam Safety Evaluations

| | Design Condition Factor of Safety | | |
|---|---|---|---|
| Criterion | End of Construction | Long Term | Sudden Drawdown |
| U.S. Army Corps of Engineers minimum factors of safety for "project" levees[a] | 1.3 | 1.4 | 1.0 |
| U.S. Army Corps of Engineers guidelines for nonfederal levee rehabilitations in the Delta under PL 84-99[b] | – | 1.25 | – |
| California Department of Water Resources criteria for "nonproject" levee rehabilitations in the Delta[c] | – | 1.3 | – |
| Factors of safety for dam safety evaluations under DSOD jurisdiction[d] | – | 1.5 | 1.25 |

Notes:

[a] U.S. Army Corps of Engineers 1978.
[b] U.S. Army Corps of Engineers 1988.
[c] California Department of Water Resources 1989b.
[d] Association of State Dam Safety Officials 1989.

Definitions:

"Project" levees = Levees maintained to USACE standards by the State of California or by local landowners under state supervision.

"Nonproject" levees = Levees constructed and maintained by local landowners and reclamation districts.

Table 3D-9. Comparison between Delta Wetlands Projects on Flood Control in the 1995 DEIR/EIS and the 2000 REIR/EIS



| Impacts and Mitigation Measures of 1995 DEIR/EIS Alternatives 1 and 2 | Differences between 2000 REIR/EIS and 1995 DEIR/EIS |
|---|---|
| **CHAPTER 3D. FLOOD CONTROL** | |
| **Impact D-1**: Increase in Long-Term Levee Stability on Reservoir Islands (B)<br><br>C No mitigation is required. | **Potential Decrease in Long-Term Levee Stability on the Delta Wetlands Reservoir Islands.** Independent analyses by URSGWC indicate that the levee's long-term factor of safety would increase by 27 to 36 percent toward the reservoir islands but would decrease by 10 to 17 percent toward the sloughs. This impact is considered significant and mitigation is recommended to reduce the impact to a less-than-significant level. (S)<br><br>C Adopt Final Levee Design that Achieves Recommended Factor of Safety and Reduces the Risk of Catastrophic Levee Failure (LTS) |
| ---- | **Potential Decrease in Levee Stability on the Delta Wetlands Project Islands During or Immediately After Project Construction.** Independent analyses by URSGWC verified that the levee construction methods described in the 1995 DEIR/EIS are adequate to maintain an appropriate factor of safety. Therefore, the impact is considered less than significant and no mitigation is required. (LTS) |
| **Impact D-2**: Potential for Seepage from Reservoir Islands to Adjacent Islands (LTS)<br><br>C Measures that would minimize effects of this impact have been incorporated by the project applicant into this alternative's project description. No additional mitigation is required. | **Potential Seepage on Adjacent Islands Resulting from Project Operations.** Analyses by URSGWC indicate that seepage control measures proposed by Delta Wetlands would be adequate to control seepage; however, the seepage control performance criteria were not adequate to detect adverse impacts. This impact is considered significant and mitigation is recommended to reduce the impact to a less-than-significant level. (S)<br><br>C Modify Seepage Monitoring Program and Seepage Performance Standards (LTS) |

Note: S = Significant; SU = Significant and unavoidable; LTS = Less than significant; B = Beneficial.

Table 3D-9. Continued



| Impacts and Mitigation Measures of 1995 DEIR/EIS Alternatives 1 and 2 | Differences between 2000 REIR/EIS and 1995 DEIR/EIS |
|---|---|
| **Impact D-3**: Potential for Wind and Wave Erosion on Reservoir Islands (LTS)<br><br>C Measures that would minimize effects of this impact have been incorporated by the project applicant into this alternative's project description. No additional mitigation is required. | **Potential for Wind and Wave Erosion on Reservoir Islands.** Analysis by URSGWC confirmed that the levee design and erosion protection measures proposed by Delta Wetlands would be adequate to address the potential for erosion and overtopping of the levees under worst-case wave runup conditions. This impact is considered less than significant. (LTS) |
| **Impact D-4**: Potential for Erosion of Levee Toe Berms at Pump Stations and Siphon Stations on Reservoir Islands (LTS)<br><br>C Measures that would minimize effects of this impact have been incorporated by the project applicant into this alternative's project description. No additional mitigation is required. | These effects were not reevaluated in the REIR/EIS. The impact conclusions and mitigation remain the same as presented in the 1995 DEIR/EIS. |
| **Impact D-5**: Decrease in Potential for Levee Failure on Delta Wetlands Project Islands during Seismic Activity (B)<br><br>C No mitigation is required. | **Potential Levee Failure on Delta Wetlands Project Islands during Seismic Activity.** Analyses by URSGWC indicate that deformation of as much as 4 feet of the reservoir island levee slopes would be experienced during a probable earthquake in the region. Compared to existing conditions, levee stability on the reservoir islands would be greater on the reservoir side and would be less on the slough side. This impact is considered significant and mitigation is recommended to reduce the impact to a less-than-significant level. (S)<br><br>C Adopt Final Levee Design that Achieves Recommended Factor of Safety and Reduces the Risk of Catastrophic Levee Failure (LTS) |

Note: S = Significant; SU = Significant and unavoidable; LTS = Less than significant; B = Beneficial.

Table 3D-9. Continued



| Impacts and Mitigation Measures of 1995 DEIR/EIS Alternatives 1 and 2 | Differences between 2000 REIR/EIS and 1995 DEIR/EIS |
|---|---|
| ---- | **Potential Property Damage Resulting from Levee Failure.** The project would have no effect on property compared to existing conditions if a levee were to fail into a reservoir island. There would be potential for property damage to occur if a levee failed toward the slough under full reservoir conditions, but the effect is considered less than significant because the risk of levee failure is very low. (LTS) |
| **Impact D-6**: Increase in Long-Term Levee Stability on Habitat Islands (B)<br><br>C No mitigation is required. | These effects were not re-evaluated in the REIR/EIS. The impact conclusions and mitigation remain the same as presented in the 1995 DEIR/EIS. |
| **Cumulative Impacts** | |
| **Impact D-12**: Decrease in Cumulative Flood Hazard in the Delta (B)<br><br>C No mitigation is required. | **Cumulative Effects on Delta Flood Hazard.** Implementation of the Delta Wetlands Project would not significantly contribute to cumulative flood hazards in the Delta. This impact is considered less than significant and no mitigation is required. (LTS) |
| **Impact D-13**: Decrease in the Need for Public Financing of Levee Maintenance and Repair on the Delta Wetlands Project Islands (B)<br><br>C No mitigation is required. | This impact was not re-evaluated in the REIR/EIS. The impact conclusion remains the same as presented in the 1995 DEIR/EIS. |

Notes:

Impacts D-7 through D-11 of the 1995 DEIR/EIS describe impacts of Alternative 3, the four-reservoir-island alternative. The REIR/EIS does not analyze levee stability and seepage for Bouldin Island and Holland Tract. However, it can be reasonably assumed that the impact conclusions shown here for the proposed project would also apply to these islands under Alternative 3.

S = Significant; SU = Significant and unavoidable; LTS = Less than significant; B = Beneficial.

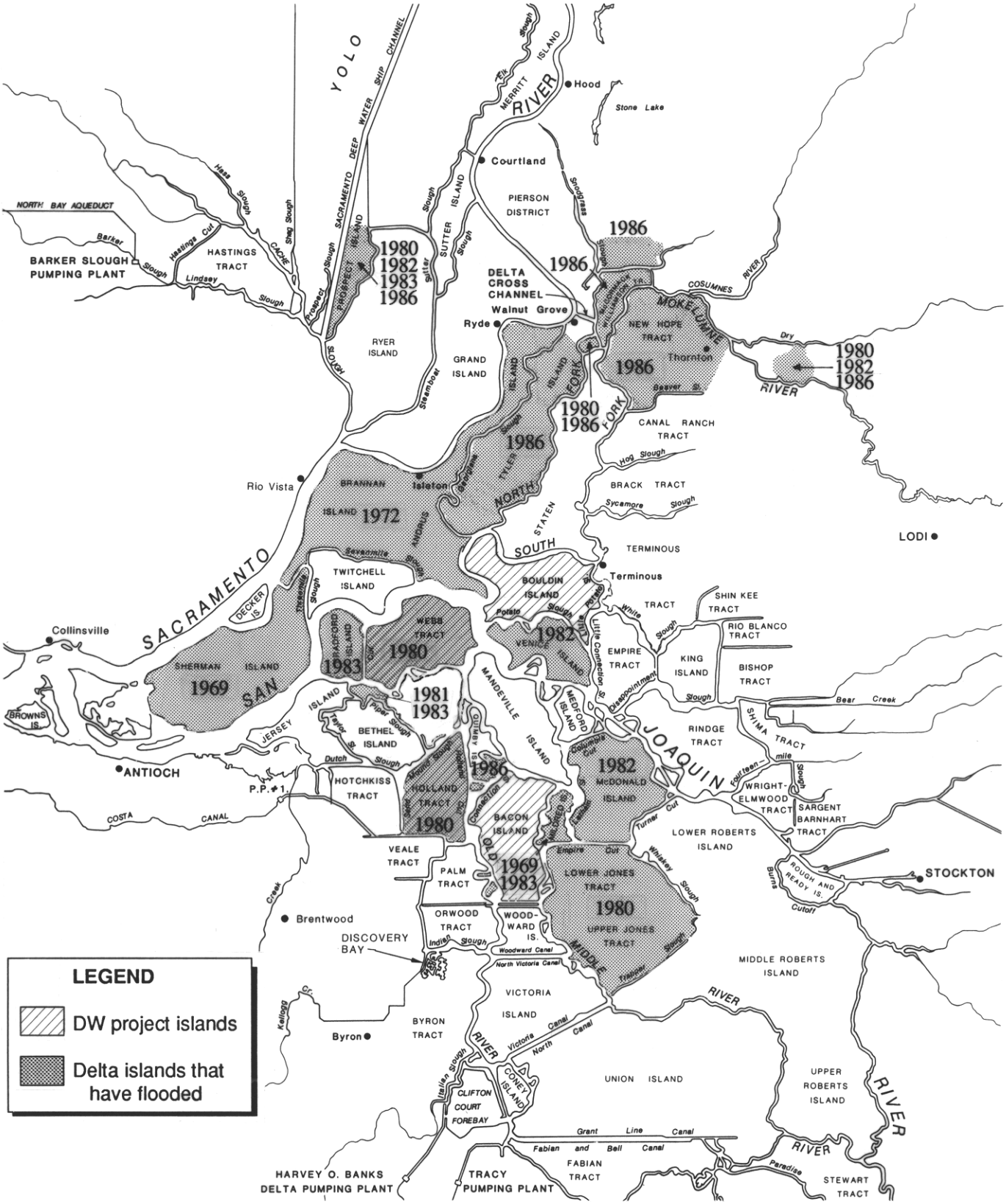


Source: California Department of Water Resources 1993.

Jones & Stokes

**Figure 3D-1**
**Recent Flooding on Delta Islands, 1967-1992**

## Example A: Broken-Slope Buttress

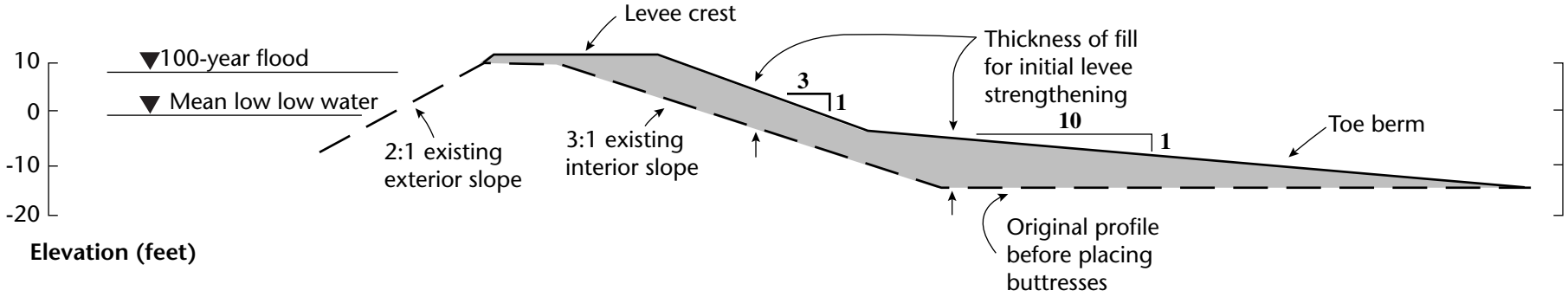


## Example B: Constant-Slope Buttress

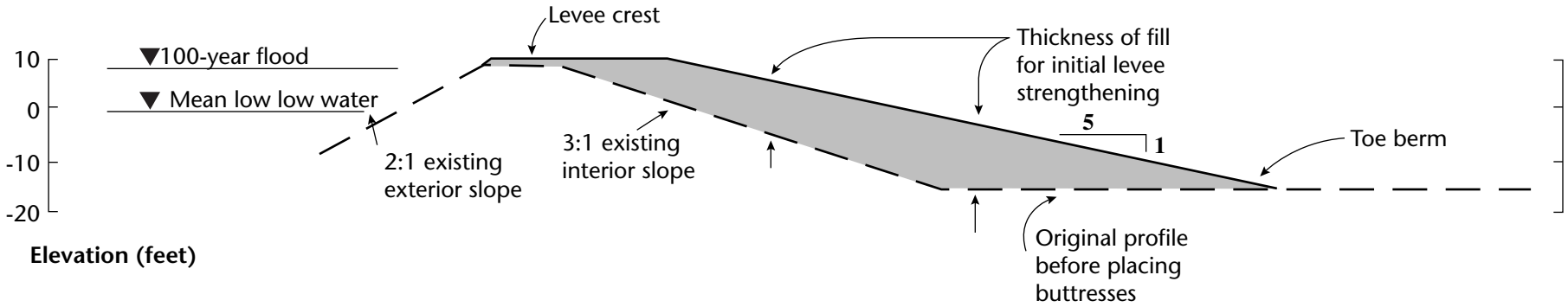


Source: Harding Lawson Associates 1993.

Jones & Stokes

**Figure 3D-2**
**Examples of Initial Levee Strengthening on Reservoir Islands**

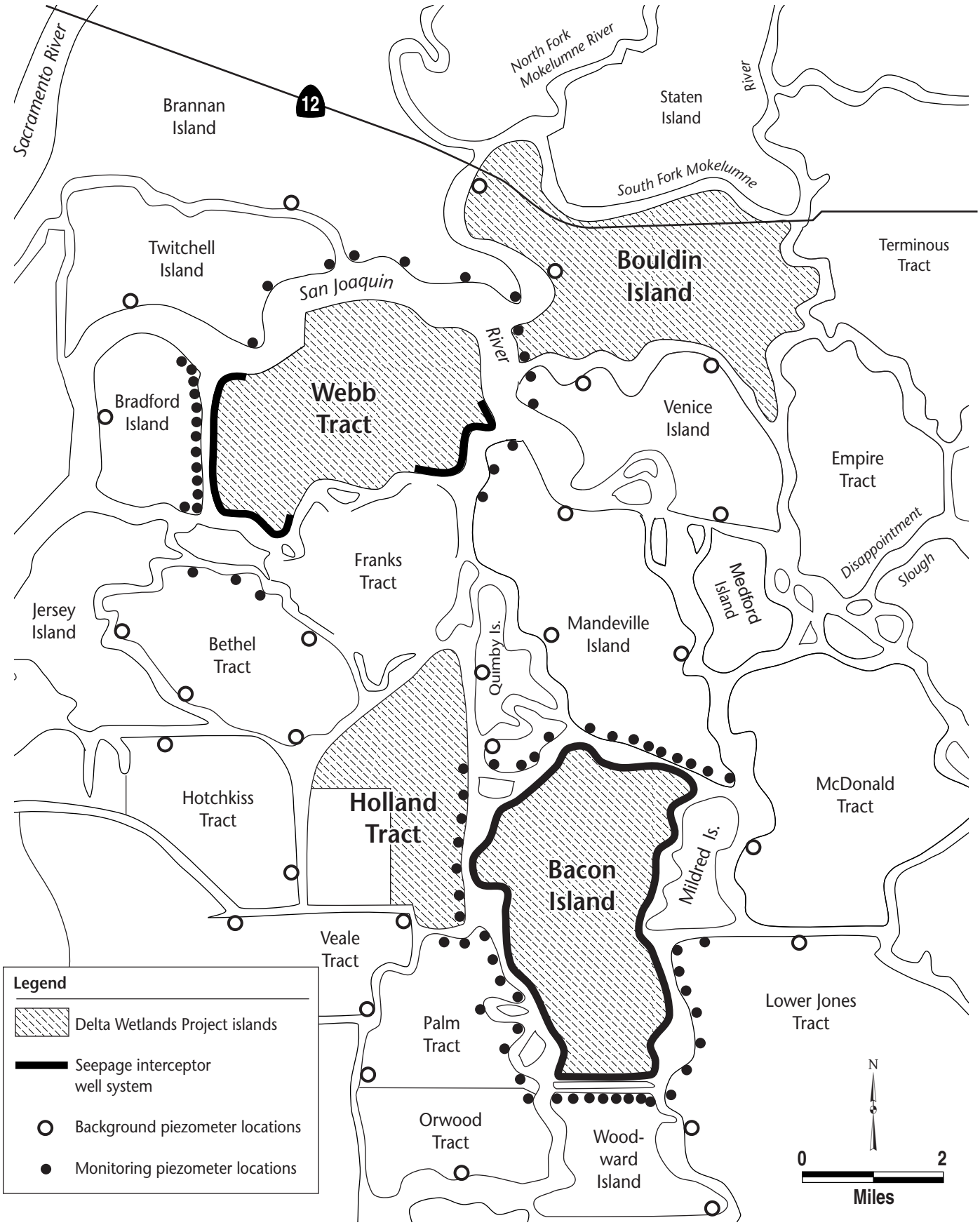


Jones & Stokes

**Figure 3D-3**
**Seepage Interceptor Well System and Proposed Locations of Seepage Monitoring Piezometers under Alternatives 1 and 2**

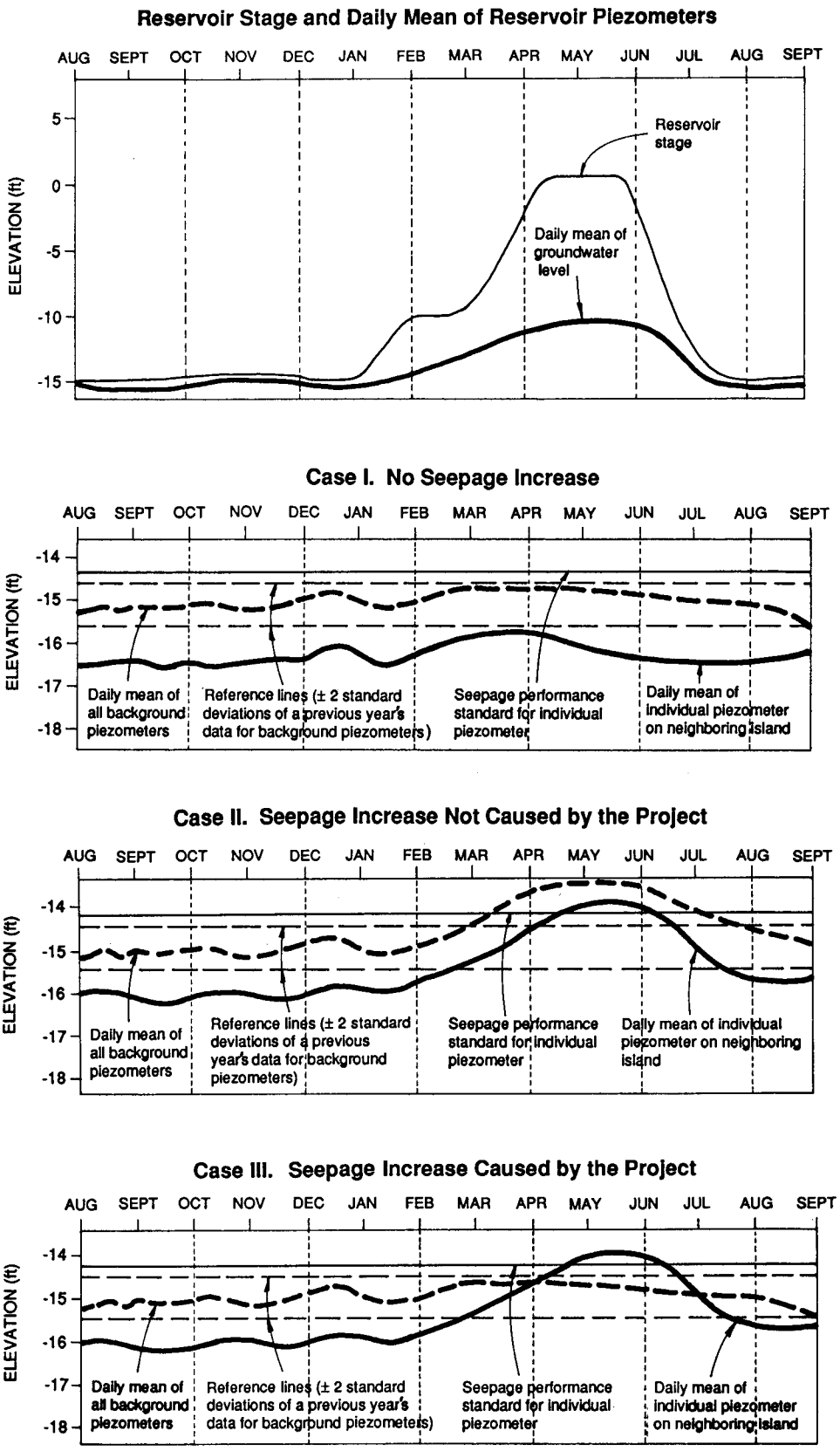


Jones & Stokes

**Figure 3D-4**
**Hypothetical Patterns of Seepage Relative to Performance Standards**

**Example A: Broken-Slope Buttress**

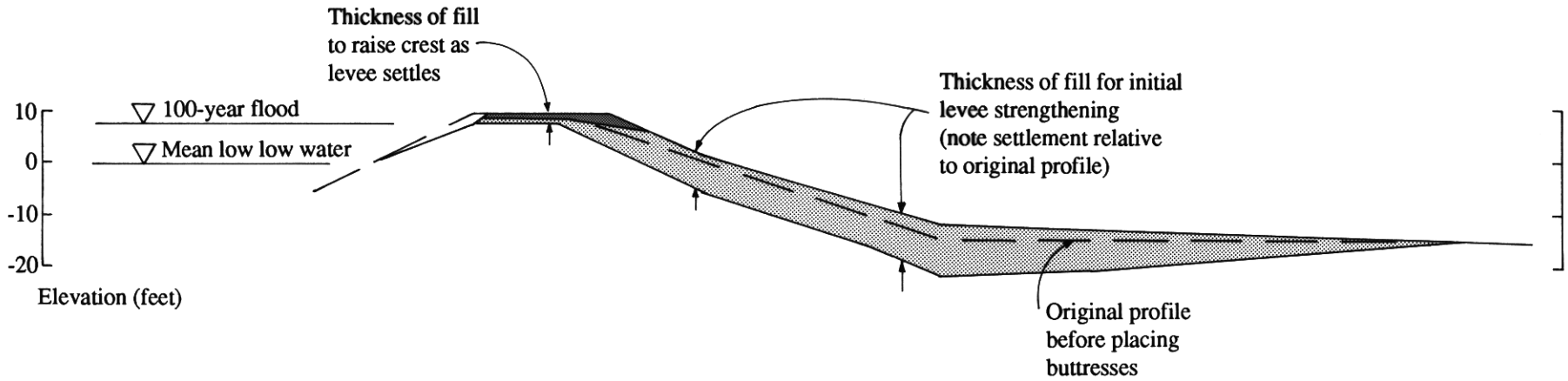


**Example B: Constant-Slope Buttress**

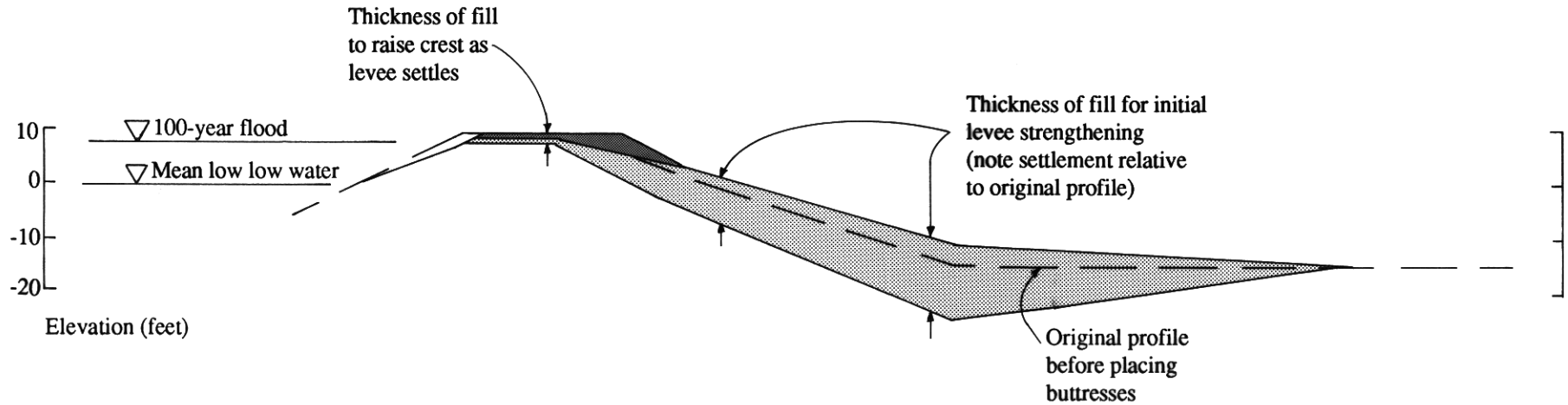


Source: Harding Lawson Associates 1993.

Jones & Stokes

**Figure 3D-5**
**Examples of Settlement of Initial Fill and Rising Crest with Additional Fill**

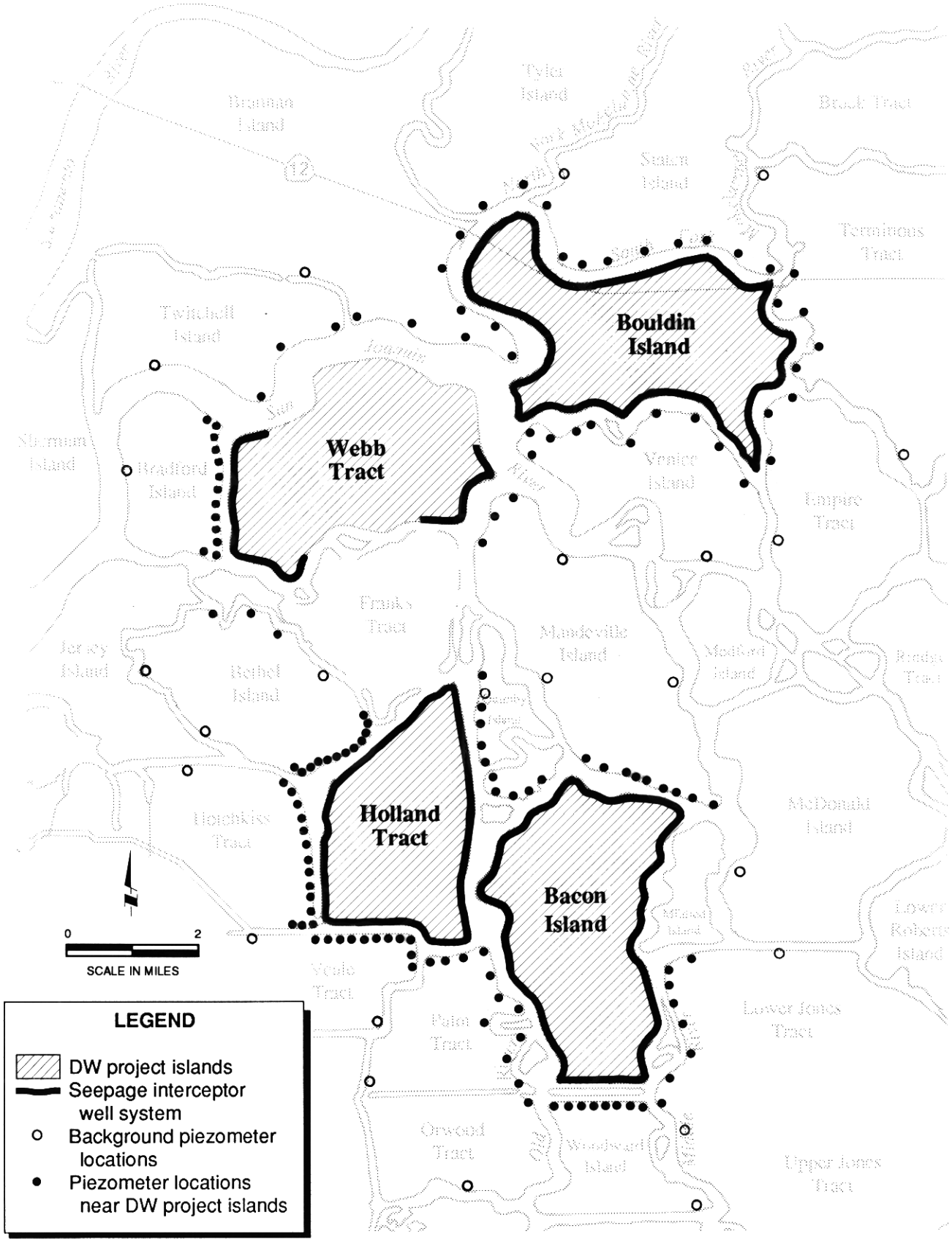


Source: Hultgren pers.comm.

Jones & Stokes

**Figure 3D-6**
**Seepage Interceptor Well System and Proposed Locations of Seepage Monitoring Piezometers for Alternative 3**

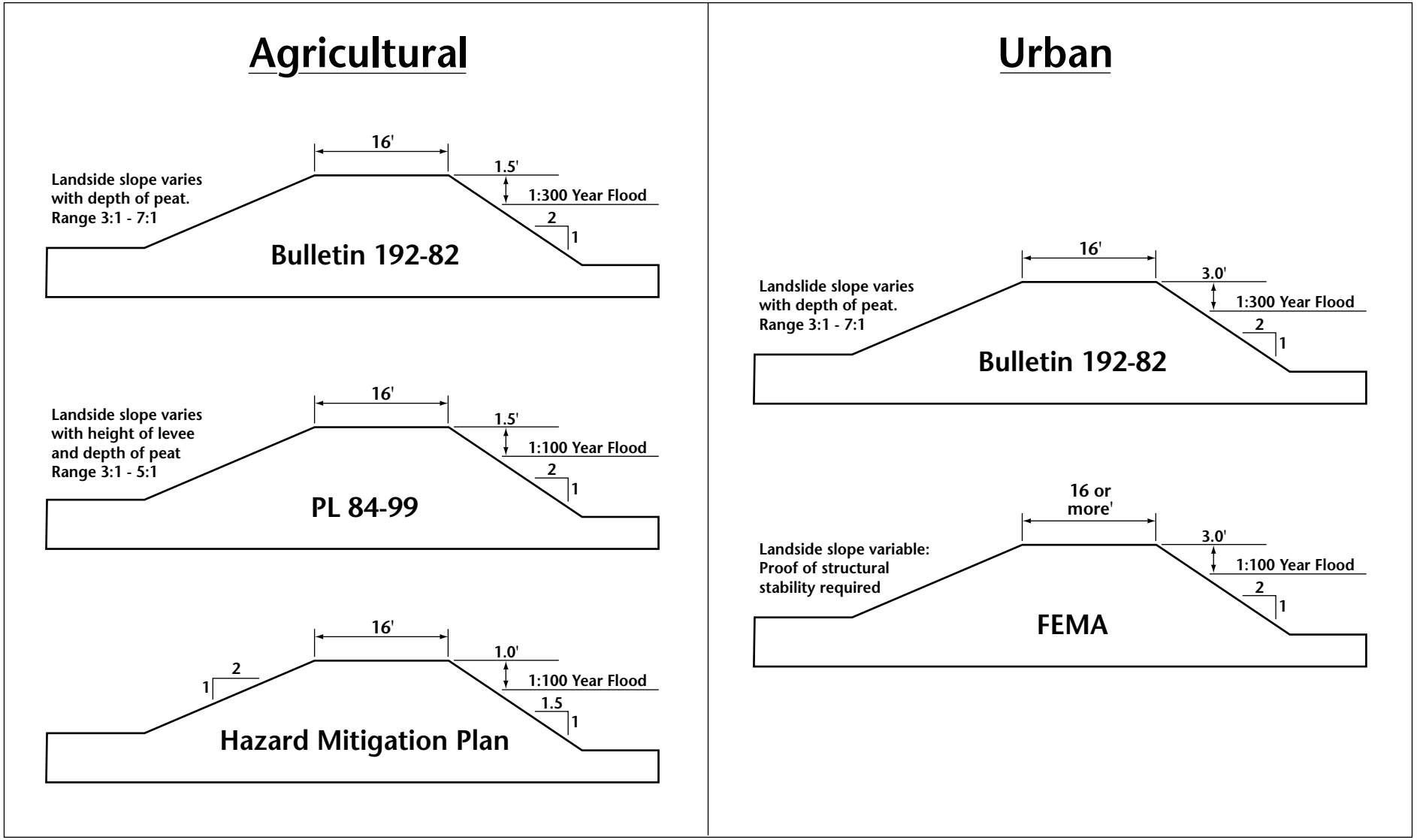


Jones & Stokes

**Figure 3D-7**
**Levee Geometric Standards**