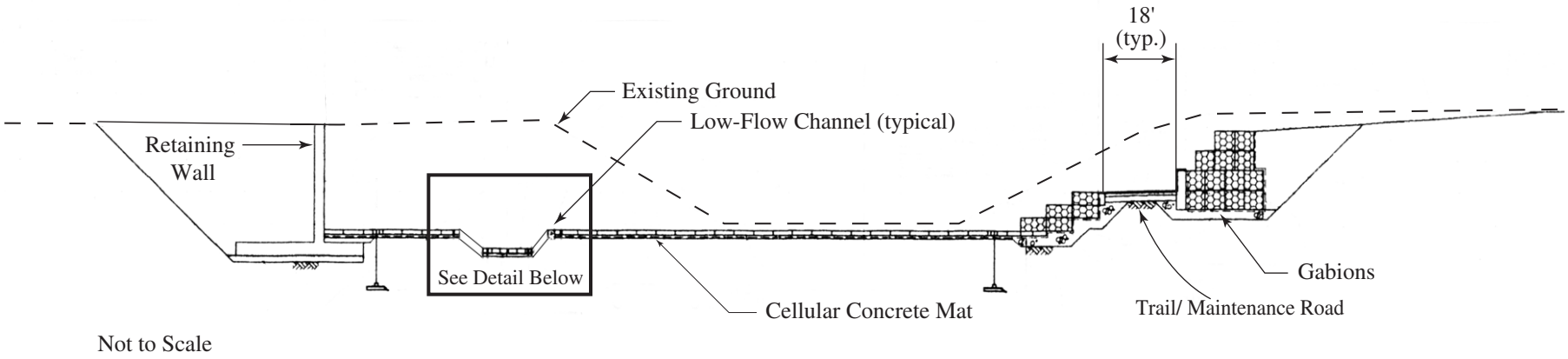

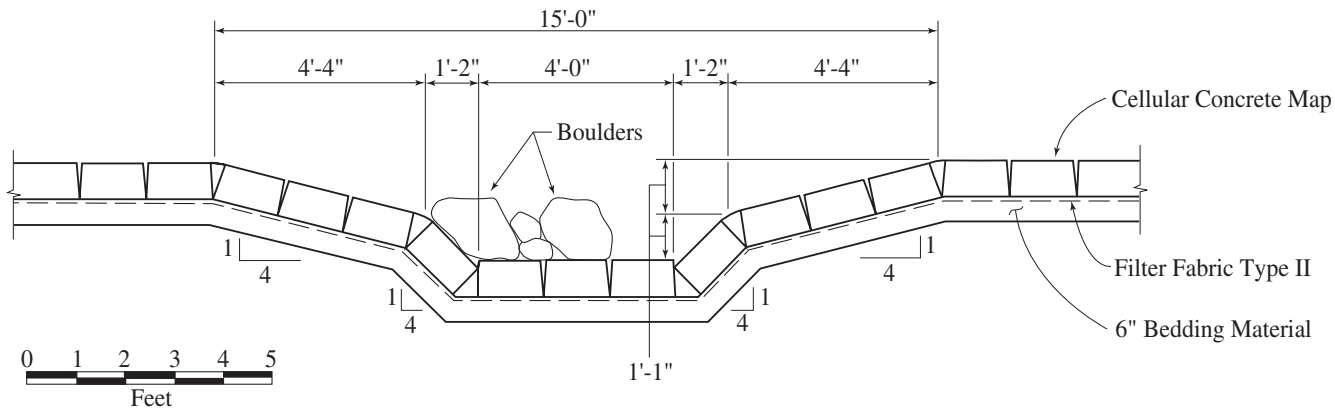

Note:
Low-flow channel check structure not pictured.

Figure 3.3-1. Segment 3C Phase 2 General Cross Section Showing Trapezoid/Boulder Low-Flow Channel Design