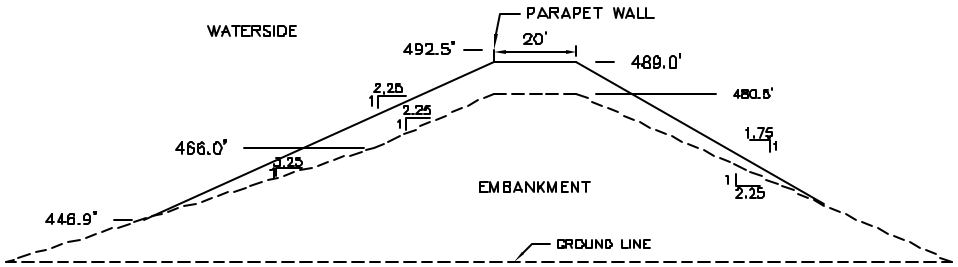

TYPICAL DIKE SECTION

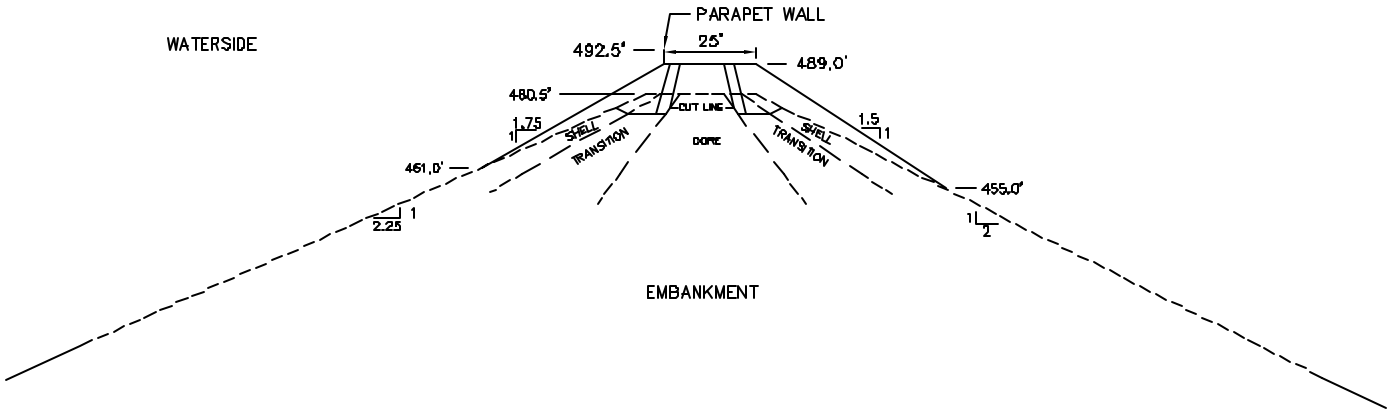

RIGHT WING EMBANKMENT DAM SECTION
(LEFT WING TO HAVE SLIGHTLY DIFFERENT INTERNAL ZONING CHARACTERISTICS)

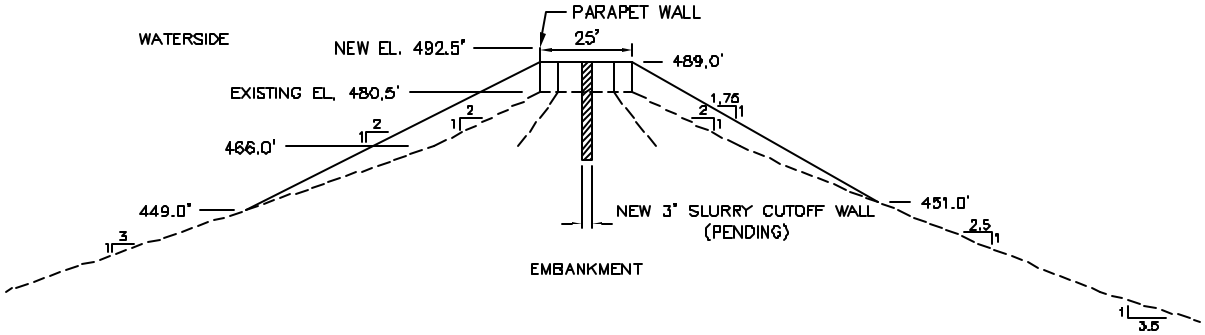

MORMON ISLAND AUXILIARY EMBANKMENT DAM SECTION

LEGEND:

—— NEW

--- EXISTING

NOTE:

1. ELEVATIONS IN FEET.
2. EMBANKMENT RAISE MATERIALS WILL BE SIMILAR TO THE EXISTING.

American River Watershed, California
Long Term Study
Final Supplemental Plan Formulation
Report/EIS/EIR

FOLSOM ENLARGEMENT PLAN

TYPICAL EMBANKMENT RAISING SECTIONS

(12'/487' MAX. FLOOD CONTROL POOL)

Sacramento District, Corps of Engineers
February 2002