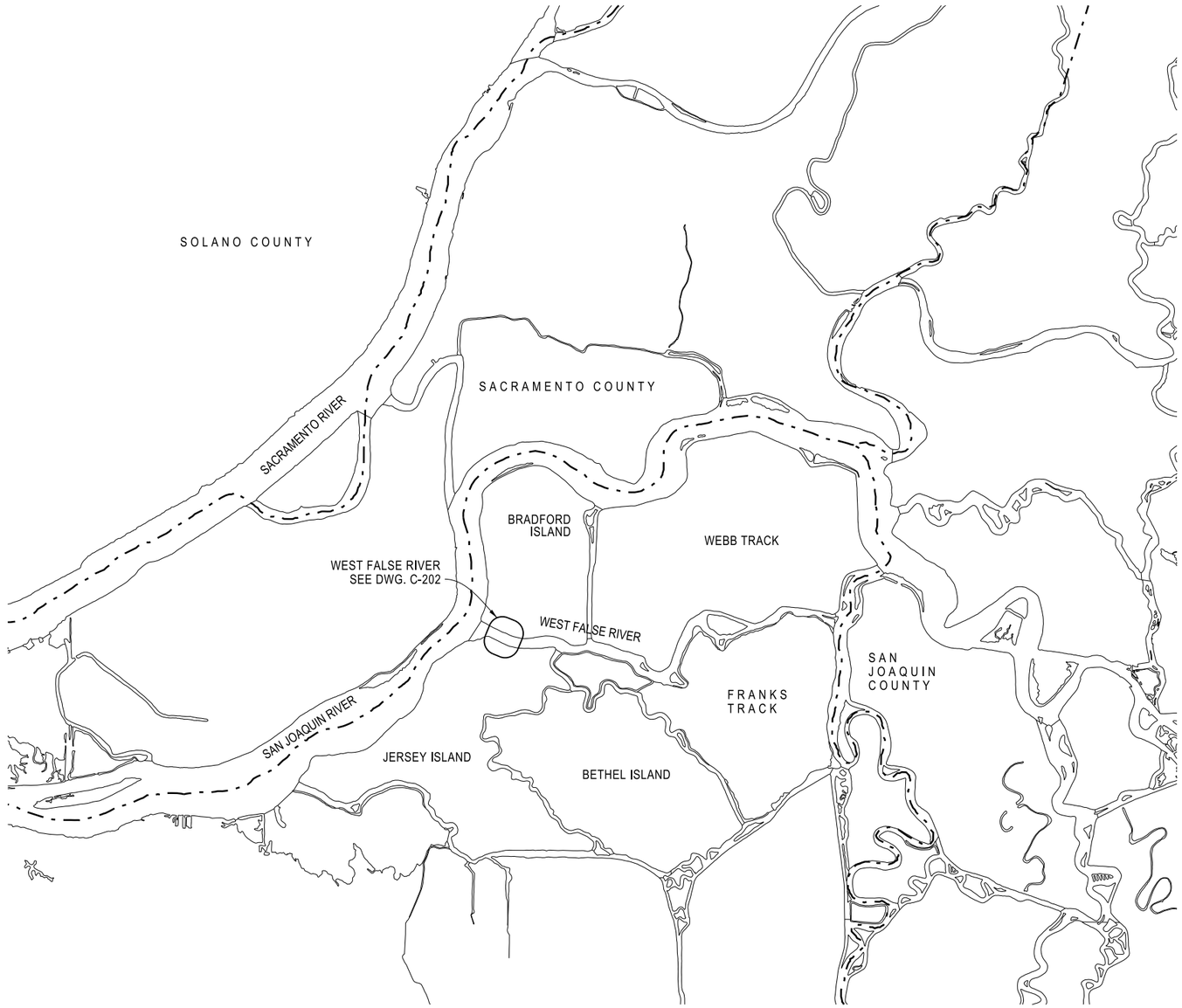


Public Notice 201400187 Figure 1

GENERAL PLAN

NOT TO SCALE

STATE OF CALIFORNIA
CALIFORNIA NATURAL RESOURCES AGENCY
DEPARTMENT OF WATER RESOURCES
DIVISION OF ENGINEERING
STATE WATER FACILITIES

| REV. | DESCRIPTION | SUB. | APP. |
|---|---|---|---|

REGISTERED PROFESSIONAL ENGINEER CHRISTINA W. KASHIWADA No. 77952 Exp. 6-30-17 CIVIL STATE OF CALIFORNIA

| DESIGNED: | CHECKED: |
|---|---|
| ANNIE W. WAGNER<br>REG. C.E. No. 72222 | ALAN Y. LAM<br>REG. C.E. No. 71346 |
| DRAWN: | REVIEWED: |
| ANNIE W. WAGNER<br>REG. C.E. No. 72222 | C. KASHIWADA<br>REG. C.E. No. 77952 |

SUBMITTED:
CHRISTINA W. KASHIWADA
REG. C.E. No. 77952

APPROVAL RECOMMENDED: DATE:

CHIEF, DAMS AND CANALS SEC., REG. C.E. No. 65001

APPROVED: DATE:

CHIEF, GEOTECH. & ENGR. SERVICES BRANCH, REG. C.E. No. 52754

**THINK SAFETY - ACT SAFELY**

STATE WATER FACILITIES
DROUGHT EMERGENCY

DROUGHT SALINITY BARRIER
2016

WEST FALSE RIVER

GENERAL PLAN

| SPEC. NO. | SHEET NO. | REVISION | DRAWING NO. |
|---|---|---|---|
| | 002 | | C-201 |

V= Plot.BW.11x17.PEN
11/9/2015

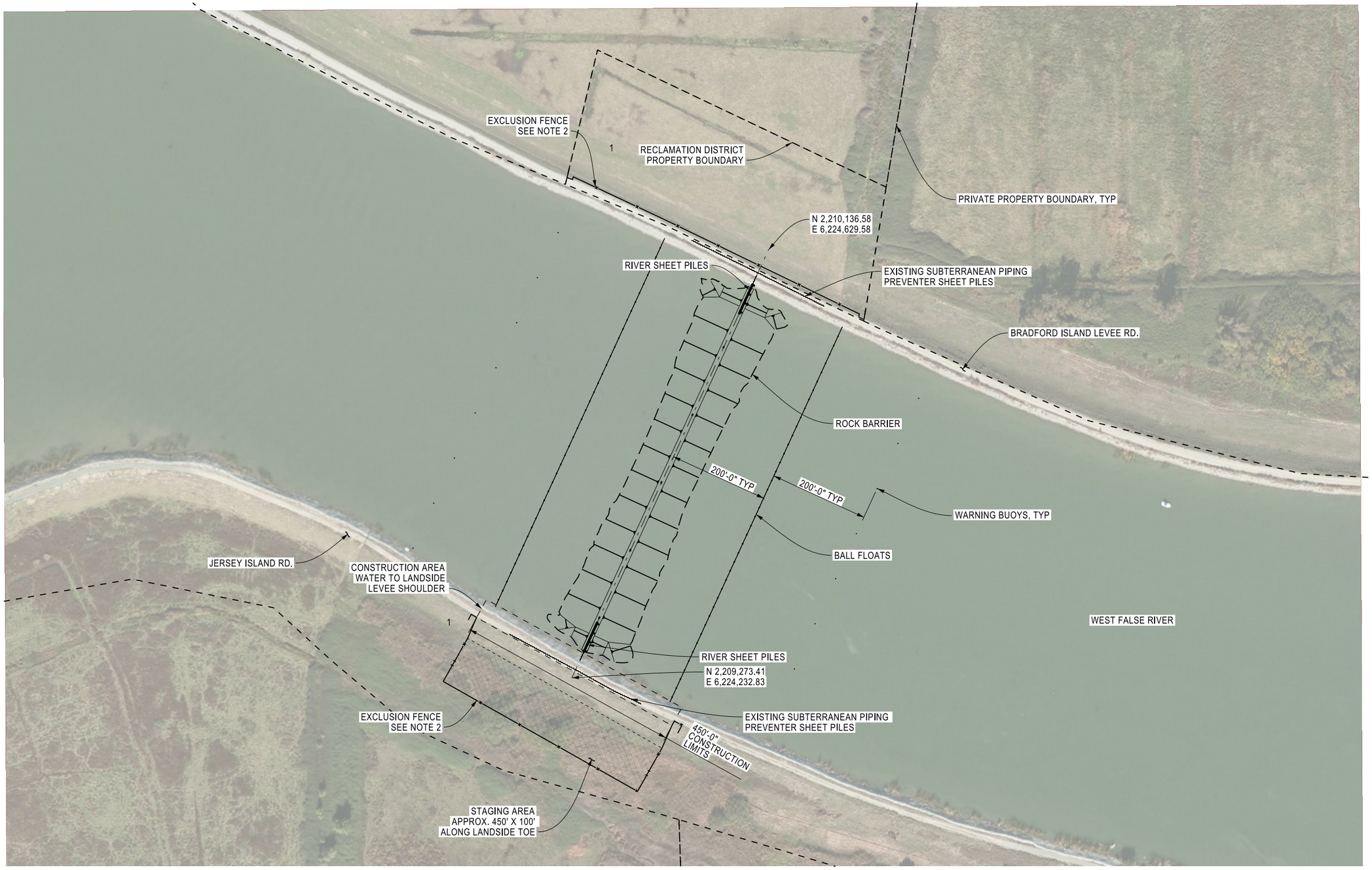


Public Notice 201400187 Figure 2

WEST FALSE RIVER - GENERAL PLAN

SCALE: 1"= 100'

0 50 100

NOTES:

1. DATUM- CALIFORNIA STATE PLANE ZONE 3, NAD 83, NAVD 88, FEET
2. EXCLUSION FENCE INSTALLED AS DIRECTED.

STATE OF CALIFORNIA
CALIFORNIA NATURAL RESOURCES AGENCY
DEPARTMENT OF WATER RESOURCES
DIVISION OF ENGINEERING
STATE WATER FACILITIES

| REV. | DESCRIPTION | SUB. | APP. |
|---|---|---|---|

REGISTERED PROFESSIONAL ENGINEER CHRISTINA W. KASHIWADA No. 77952 Exp. 6-30-17 CIVIL STATE OF CALIFORNIA

| DESIGNED: | CHECKED: |
|---|---|
| ANNIE W. WAGNER<br>REG. C.E. No. 72222 | ALAN Y. LAM<br>REG. C.E. No. 71346 |
| DRAWN: | REVIEWED: |
| ANNIE W. WAGNER<br>REG. C.E. No. 72222 | C. KASHIWADA<br>REG. C.E. No. 77952 |

SUBMITTED:
CHRISTINA W. KASHIWADA
REG. C.E. No. 77952

APPROVAL RECOMMENDED: DATE:

CHIEF, DAMS AND CANALS SEC., REG. C.E. No. 65001

APPROVED: DATE:

CHIEF, GEOTECH. & ENGR. SERVICES BRANCH, REG. C.E. No. 52754

**THINK SAFETY - ACT SAFELY**

STATE WATER FACILITIES
DROUGHT EMERGENCY

DROUGHT SALINITY BARRIER
2016

WEST FALSE RIVER

WEST FALSE RIVER

GENERAL PLAN

| SPEC. NO. | SHEET NO. | REVISION | DRAWING NO. |
|---|---|---|---|
| | 003 | | C-202 |

V# Plot,BW,11x17,PEN
11/6/2015

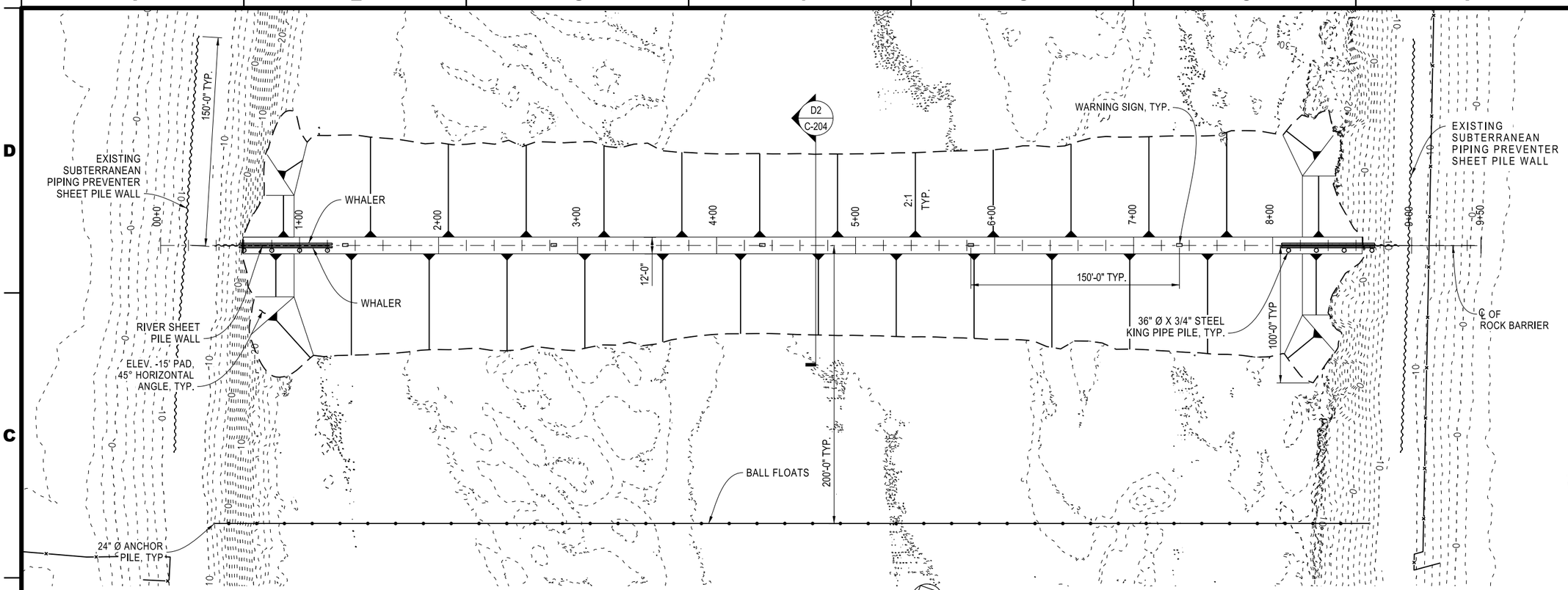


## WEST FALSE RIVER - SITE PLAN

SCALE: 1"= 40'

0 20 40

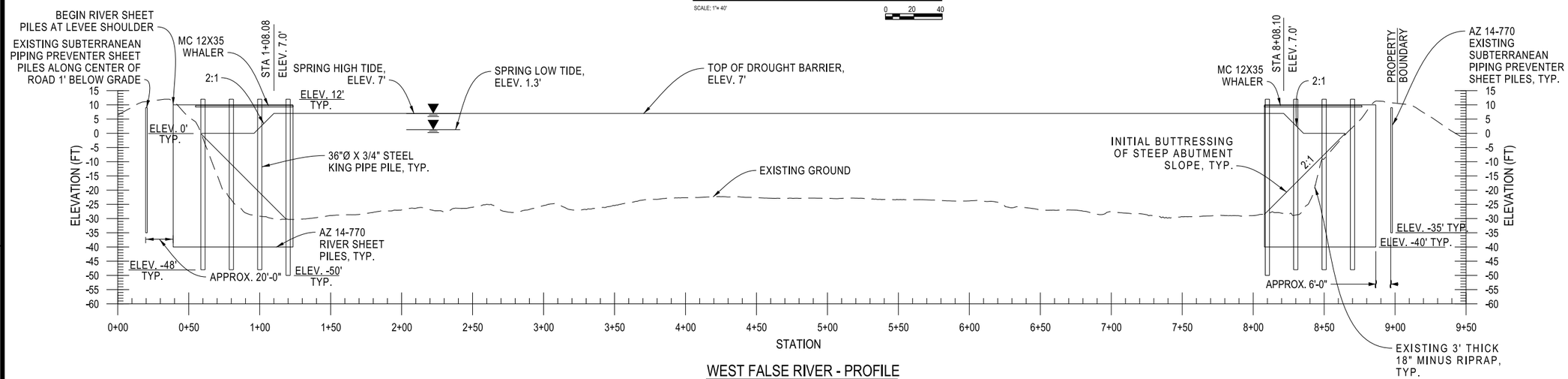


## WEST FALSE RIVER - PROFILE

0 20 40 HORIZONTAL

0 10 20 VERTICAL

Public Notice 201400187 Figure 3

DATUM: CALIFORNIA STATE PLANE ZONE 3, NAD 83, NAVD 88, FEET

STATE OF CALIFORNIA
CALIFORNIA NATURAL RESOURCES AGENCY
DEPARTMENT OF WATER RESOURCES
DIVISION OF ENGINEERING
STATE WATER FACILITIES

| REV. | DESCRIPTION | SUB. | APP. |
|---|---|---|---|

REGISTERED PROFESSIONAL ENGINEER CHRISTINA W. KASHIWADA No. 77952 Exp. 6-30-17 CIVIL STATE OF CALIFORNIA

| | |
|---|---|
| DESIGNED: ANNIE W. WAGNER REG. C.E. No. 72222 | CHECKED: ALAN Y. LAM REG. C.E. No. 71346 |
| DRAWN: ANNIE W. WAGNER REG. C.E. No. 72222 | REVIEWED: C. KASHIWADA REG. C.E. No. 77952 |

SUBMITTED:
CHRISTINA W. KASHIWADA
REG. C.E. No. 77952

APPROVAL RECOMMENDED: DATE:
CHIEF, DAMS AND CANALS SEC., REG. C.E. No. 65001

APPROVED: DATE:
CHIEF, GEOTECH. & ENGR. SERVICES BRANCH, REG. C.E. No. 52754

**THINK SAFETY - ACT SAFELY**

STATE WATER FACILITIES
DROUGHT EMERGENCY

DROUGHT SALINITY BARRIER
2016

WEST FALSE RIVER

WEST FALSE RIVER

SITE PLAN AND PROFILE

| SPEC. NO. | SHEET NO. | REVISION | DRAWING NO. |
|---|---|---|---|
| | 004 | | C-203 |

V= Plot,BW,11x17,PEN
11/6/2015

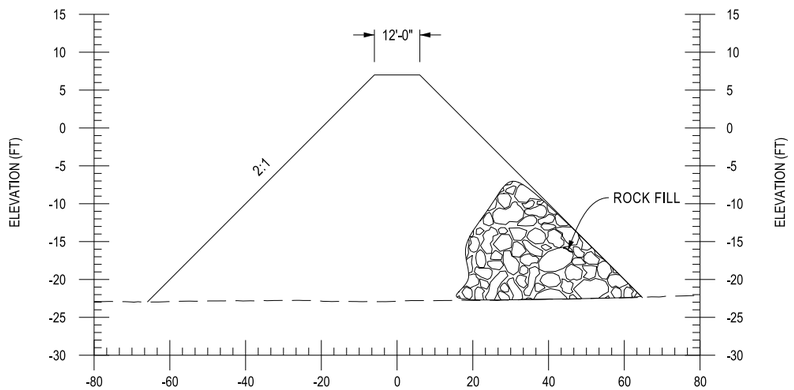


D2 C-203 TYPICAL ROCK BARRIER SECTION

VERTICAL 0 5 10 HORIZONTAL 0 10 20

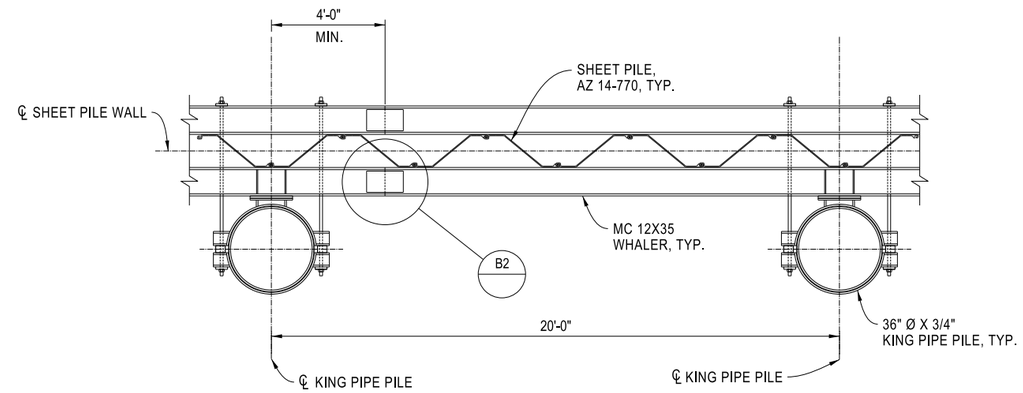


PLAN

TYPICAL WHALER SPLICE

SCALE: 3/8" = 1' 0 1'-4" 2'-8"

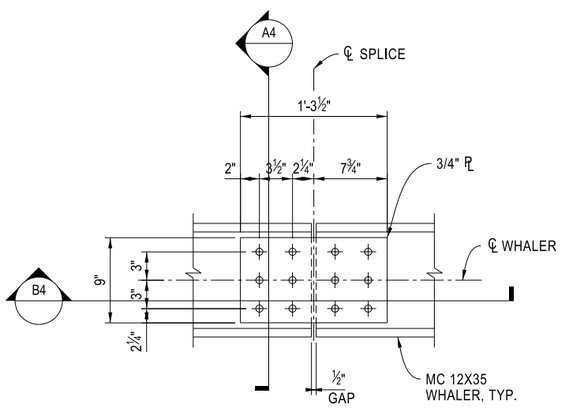


B2 WHALER SPLICE DETAIL

SCALE: 1" = 8" 0 4" 8"

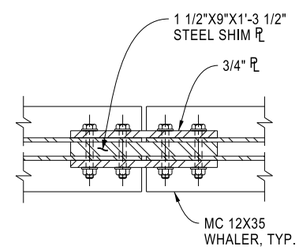


B4 WHALER SPLICE DETAIL 2

SCALE: 1" = 8" 0 4" 8"

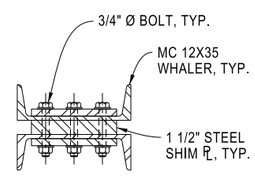


A4 WHALER SPLICE DETAIL 3

SCALE: 1" = 8" 0 4" 8"

Public Notice 201400187 Figure 4

DATUM: CALIFORNIA STATE PLANE ZONE 3, NAD 83, NAVD 88, FEET

STATE OF CALIFORNIA
CALIFORNIA NATURAL RESOURCES AGENCY
DEPARTMENT OF WATER RESOURCES
DIVISION OF ENGINEERING
STATE WATER FACILITIES

| REV. | DESCRIPTION | SUB. | APP. |
|---|---|---|---|

REGISTERED PROFESSIONAL ENGINEER CHRISTINA W. KASHIWADA No. 77952 Exp. 6-30-17 CIVIL STATE OF CALIFORNIA

| DESIGNED: | CHECKED: |
|---|---|
| ANNIE W. WAGNER<br>REG. C.E. No. 72222 | ALAN Y. LAM<br>REG. C.E. No. 71346 |
| DRAWN: | REVIEWED: |
| ANNIE W. WAGNER<br>REG. C.E. No. 72222 | C. KASHIWADA<br>REG. C.E. No. 77952 |

SUBMITTED:
CHRISTINA W. KASHIWADA
REG. C.E. No. 77952

APPROVAL RECOMMENDED: DATE:

CHIEF, DAMS AND CANALS SEC., REG. C.E. No. 65001

APPROVED: DATE:

CHIEF, GEOTECH. & ENGR. SERVICES BRANCH, REG. C.E. No. 52754

**THINK SAFETY - ACT SAFELY**

STATE WATER FACILITIES
DROUGHT EMERGENCY

DROUGHT SALINITY BARRIER
2016

WEST FALSE RIVER

WEST FALSE RIVER

DETAILS AND SECTION

| SPEC. NO. | SHEET NO. | REVISION | DRAWING NO. |
|---|---|---|---|
| | 005 | | C-204 |

V= Plot.BW.11x17.PEN
11/6/2015

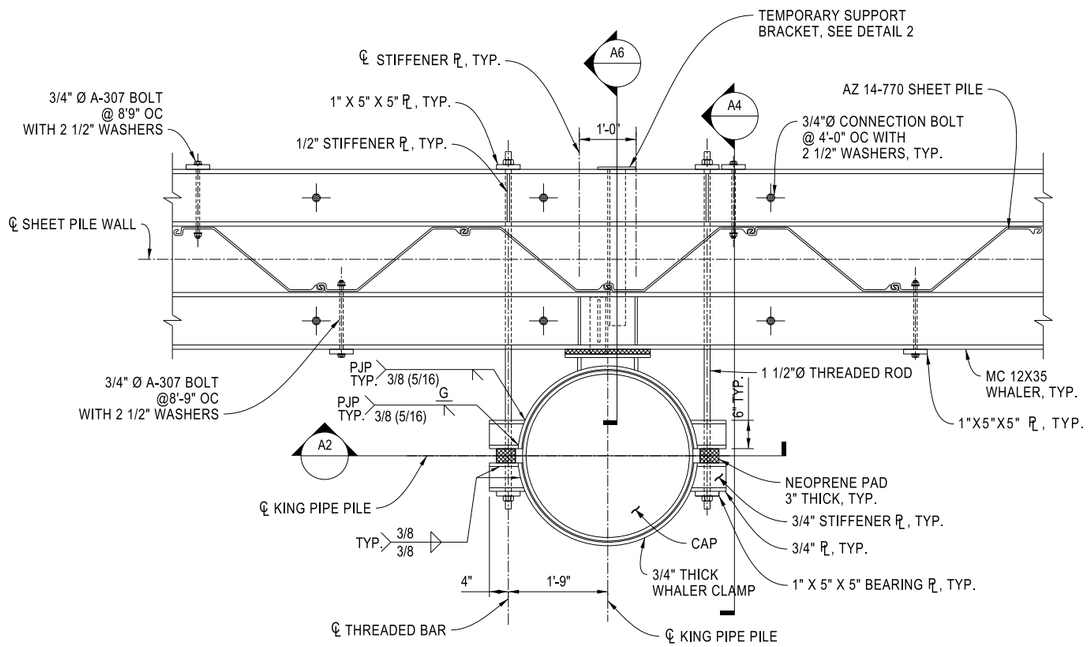


PLAN DETAIL 01

SCALE: 1"= 3/4"

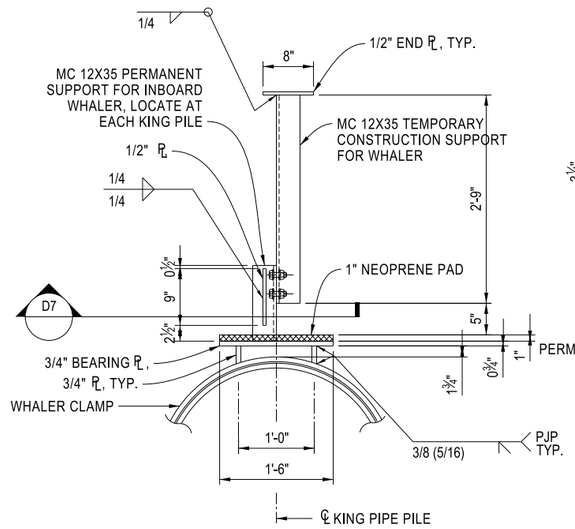


PLAN DETAIL 02

SCALE: 1"= 1'

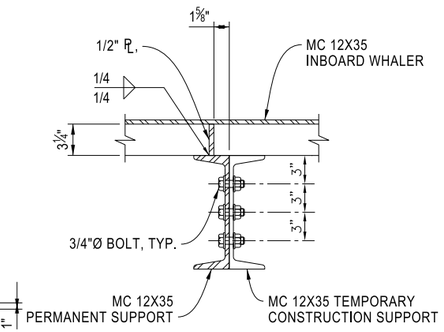


D7 SECTION DETAIL

SCALE: 1"= 1 1/2"

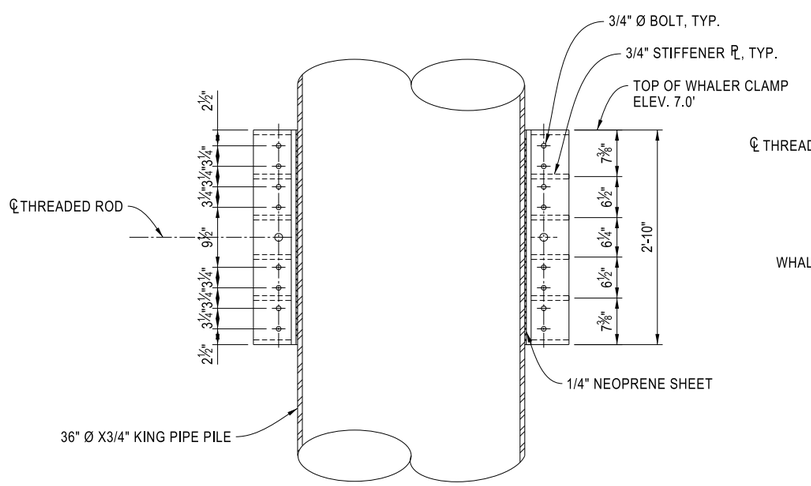


A2 SECTION DETAIL

SCALE: 1"= 1'

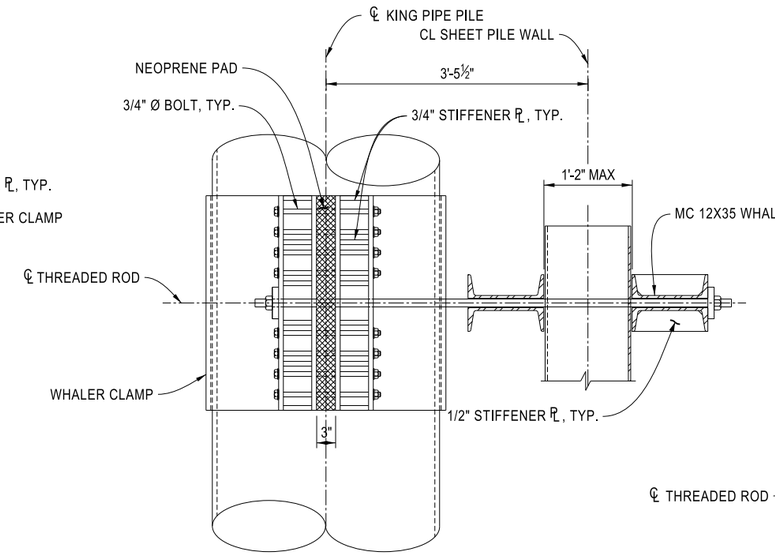


A4 SECTION DETAIL

SCALE: 1"= 1'

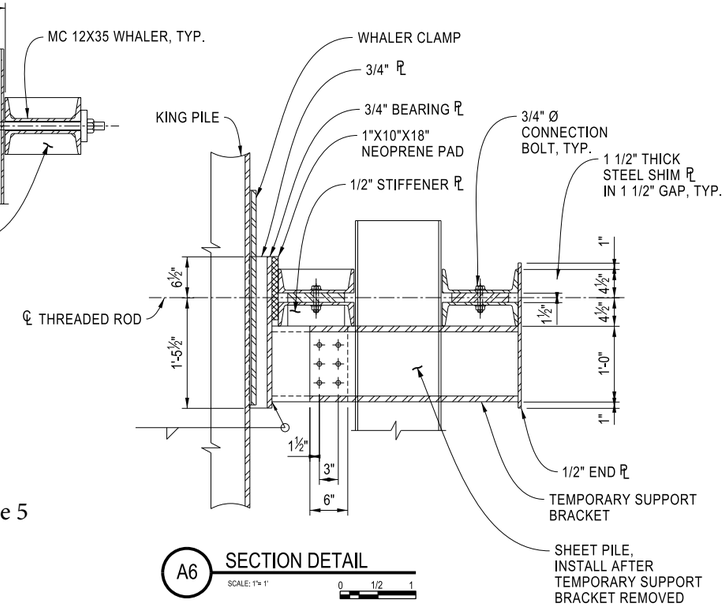


A6 SECTION DETAIL

SCALE: 1"= 1'

Public Notice 201400187 Figure 5

STATE OF CALIFORNIA
CALIFORNIA NATURAL RESOURCES AGENCY
DEPARTMENT OF WATER RESOURCES
DIVISION OF ENGINEERING
STATE WATER FACILITIES

| REV. | DESCRIPTION | SUB. | APP. |
|---|---|---|---|

REGISTERED PROFESSIONAL ENGINEER CHRISTINA W. KASHIWADA No. 77952 Exp. 6-30-17 CIVIL STATE OF CALIFORNIA

| | |
|---|---|
| DESIGNED: ANNIE W. WAGNER REG. C.E. No. 72222 | CHECKED: ALAN Y. LAM REG. C.E. No. 71346 |
| DRAWN: ANNIE W. WAGNER REG. C.E. No. 72222 | REVIEWED: C. KASHIWADA REG. C.E. No. 77952 |
| SUBMITTED: CHRISTINA W. KASHIWADA REG. C.E. No. 77952 | |

APPROVAL RECOMMENDED: DATE:

CHIEF, GENERAL ENGINEERING SECTION, REG. C.E. No. 55947

APPROVED: DATE:

CHIEF, GEOTECH. & ENGR. SERVICES BRANCH, REG. C.E. No. 52754

**THINK SAFETY - ACT SAFELY**

STATE WATER FACILITIES
DROUGHT EMERGENCY

DROUGHT SALINITY BARRIER
2016

WEST FALSE RIVER

WEST FALSE RIVER

DETAILS 2

| SPEC. NO. | SHEET NO. | REVISION | DRAWING NO. |
|---|---|---|---|
| | 006 | | C-205 |

V:\ Plot.BW.11x17.PEN
11/6/2015