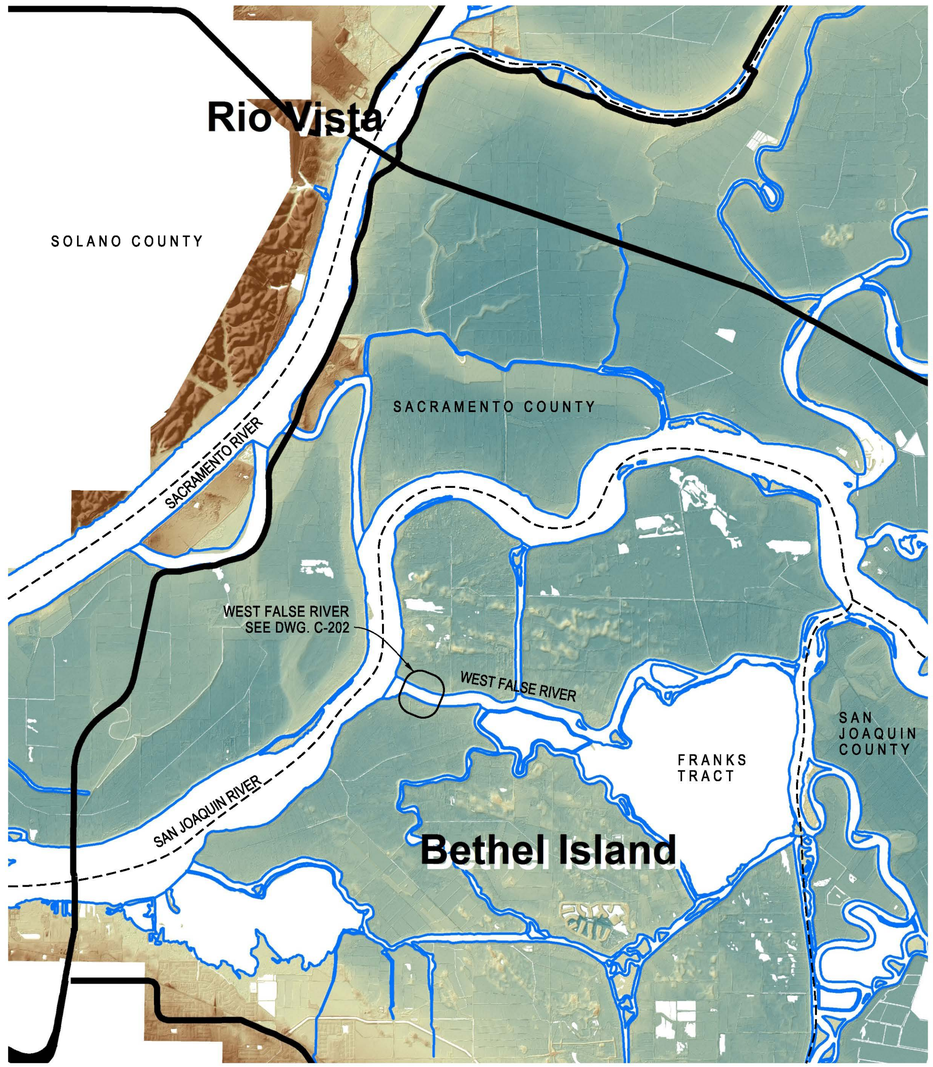

GENERAL PLAN

NOT TO SCALE

STATE OF CALIFORNIA
CALIFORNIA NATURAL RESOURCES AGENCY
DEPARTMENT OF WATER RESOURCES
DIVISION OF ENGINEERING
STATE WATER FACILITIES

REV.	DESCRIPTION	SUB.	APP.

REGISTERED PROFESSIONAL ENGINEER STATE OF CALIFORNIA

DESIGNED: CHECKED:

DRAWN: REVIEWED:

SUBMITTED:

APPROVAL RECOMMENDED: DATE:

APPROVED: DATE:

THINK SAFETY - ACT SAFELY

STATE WATER FACILITIES
DROUGHT EMERGENCY

TEMPORARY ROCK BARRIER
2015

WEST FALSE RIVER

GENERAL PLAN

SPEC. NO.	SHEET NO.	REVISION	DRAWING NO.
15-04	002		C-201

VI= Plot.BW.22x34.PEN
4/13/2015

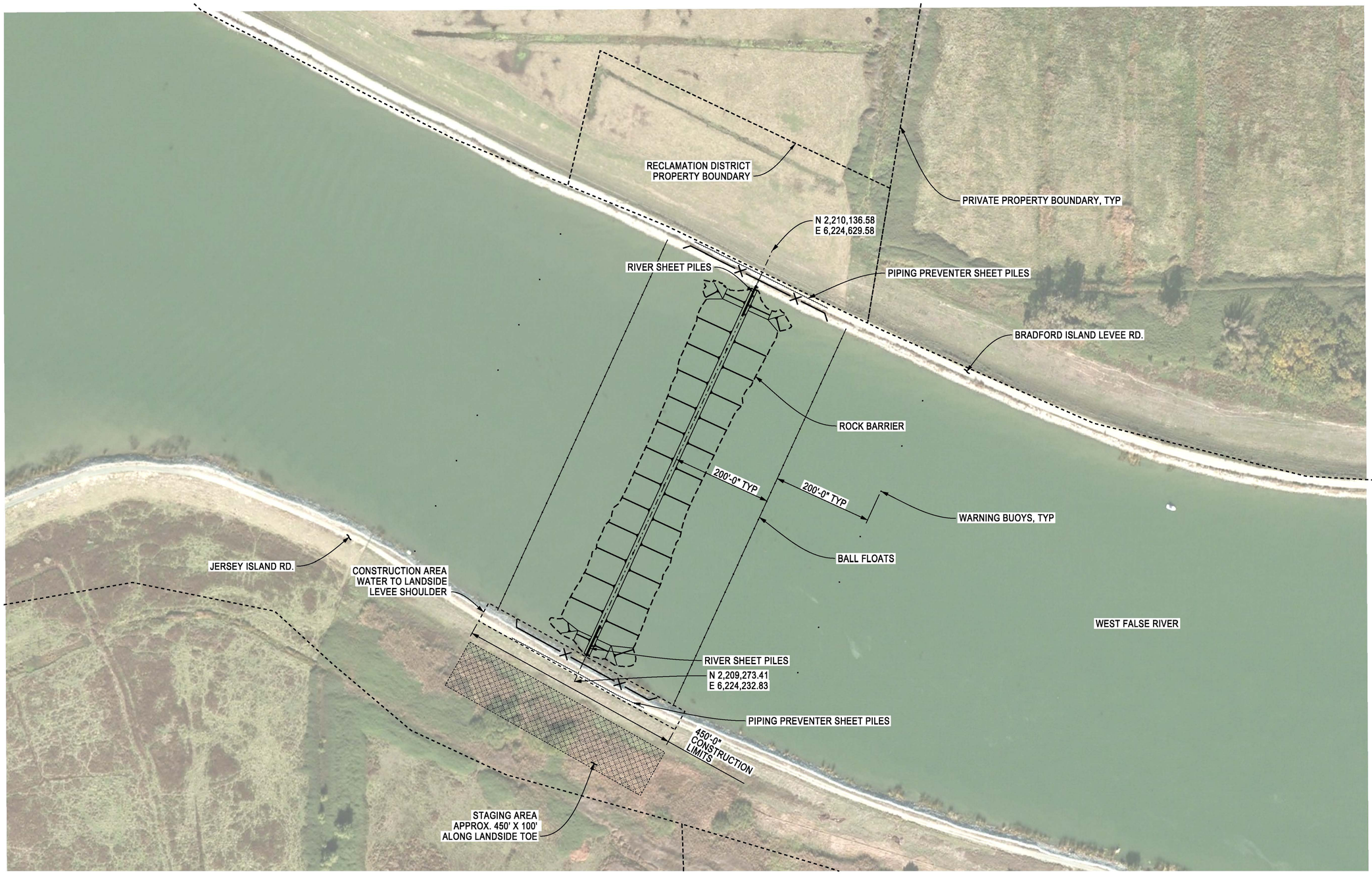

WEST FALSE RIVER - GENERAL PLAN

SCALE: 1"= 100'

0 50 100

DATUM: CALIFORNIA STATE PLANE ZONE 3, NAD 83, NAVD 88, FEET

STATE OF CALIFORNIA
CALIFORNIA NATURAL RESOURCES AGENCY
DEPARTMENT OF WATER RESOURCES
DIVISION OF ENGINEERING
STATE WATER FACILITIES

REV.	DESCRIPTION	SUB.	APP.

REGISTERED PROFESSIONAL ENGINEER STATE OF CALIFORNIA

DESIGNED: CHECKED:
DRAWN: REVIEWED:
SUBMITTED:
APPROVAL RECOMMENDED: DATE:
APPROVED: DATE:

THINK SAFETY - ACT SAFELY

STATE WATER FACILITIES
DROUGHT EMERGENCY

TEMPORARY ROCK BARRIER
2015

WEST FALSE RIVER

WEST FALSE RIVER

GENERAL PLAN

SPEC. NO.	SHEET NO.	REVISION	DRAWING NO.
15-04	003		C-202

VI= Plot.BW.22x34.PEN
4/13/2015

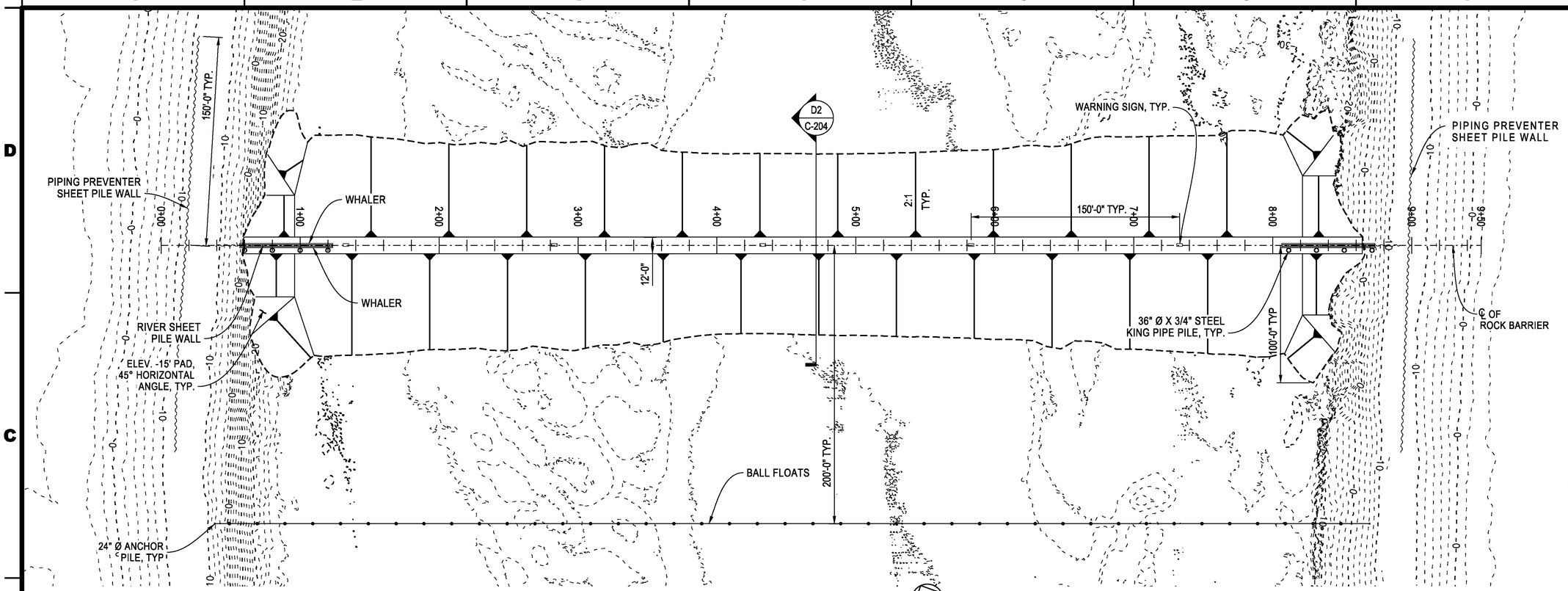

WEST FALSE RIVER - SITE PLAN

SCALE: 1"= 40'

0 20 40

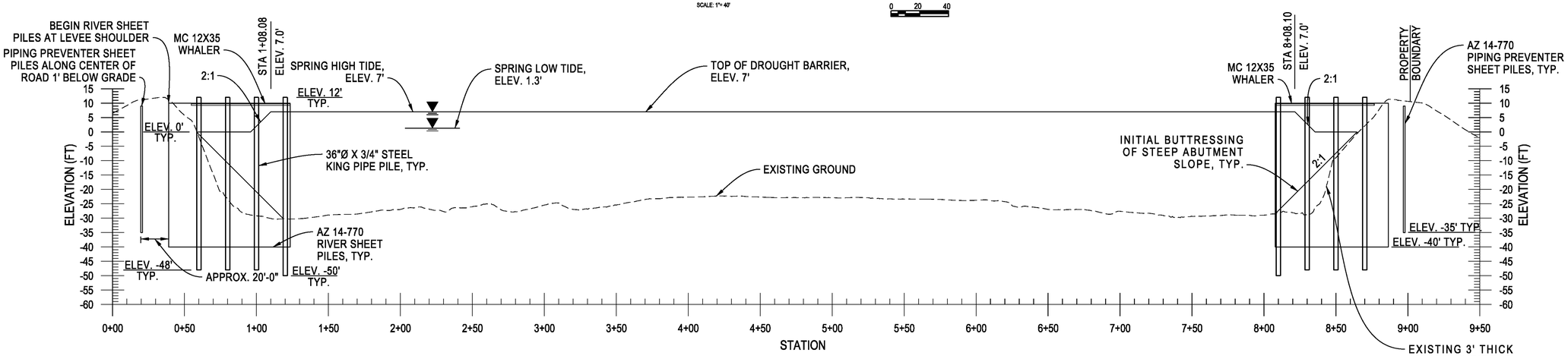

WEST FALSE RIVER - PROFILE

0 20 40 HORIZONTAL

0 10 20 VERTICAL

DATUM: CALIFORNIA STATE PLANE ZONE 3, NAD 83, NAVD 88, FEET

STATE OF CALIFORNIA
CALIFORNIA NATURAL RESOURCES AGENCY
DEPARTMENT OF WATER RESOURCES
DIVISION OF ENGINEERING
STATE WATER FACILITIES

REV.	DESCRIPTION	SUB.	APP.

REGISTERED PROFESSIONAL ENGINEER STATE OF CALIFORNIA

DESIGNED: CHECKED:
DRAWN: REVIEWED:
SUBMITTED:
APPROVAL RECOMMENDED: DATE:
APPROVED: DATE:

THINK SAFETY - ACT SAFELY

STATE WATER FACILITIES
DROUGHT EMERGENCY

TEMPORARY ROCK BARRIER
2015

WEST FALSE RIVER

WEST FALSE RIVER

SITE PLAN AND PROFILE

SPEC. NO.	SHEET NO.	REVISION	DRAWING NO.
15-04	004		C-203

VI= Plot.BW.22x34.PEN
4/13/2015

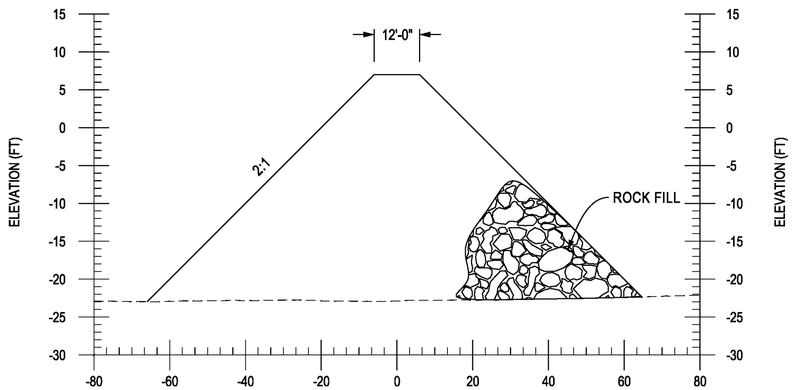

D2 C-203 TYPICAL ROCK BARRIER SECTION

VERTICAL 0 5 10 HORIZONTAL 0 10 20

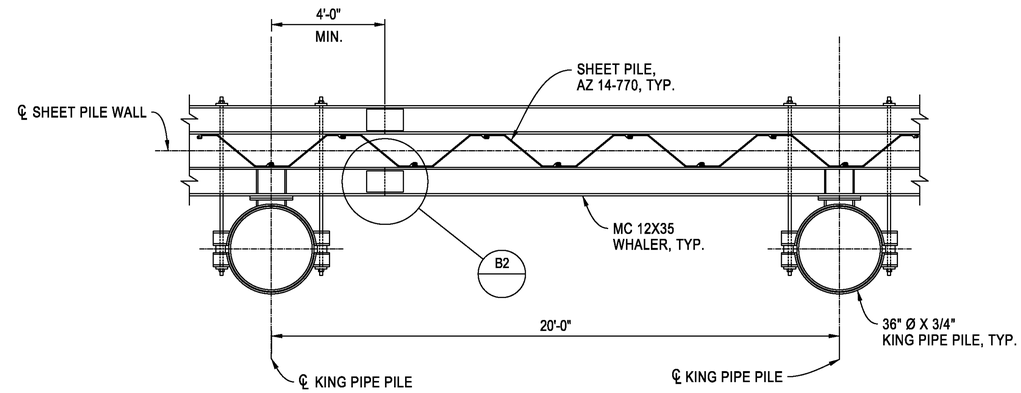

PLAN

TYPICAL WHALER SPLICE

SCALE: 3/8" = 1' 0 1'-4" 2'-8"

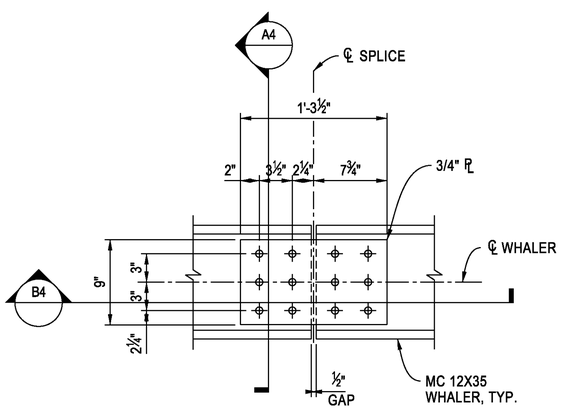

B2 WHALER SPLICE DETAIL

SCALE: 1" = 8" 0 4" 8"

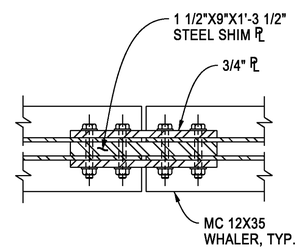

B4 WHALER SPLICE DETAIL 2

SCALE: 1" = 8" 0 4" 8"

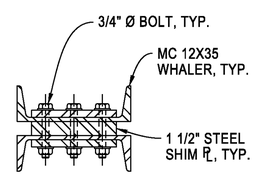

A4 WHALER SPLICE DETAIL 3

SCALE: 1" = 8" 0 4" 8"

DATUM: CALIFORNIA STATE PLANE ZONE 3, NAD 83, NAVD 88, FEET

STATE OF CALIFORNIA
CALIFORNIA NATURAL RESOURCES AGENCY
DEPARTMENT OF WATER RESOURCES
DIVISION OF ENGINEERING
STATE WATER FACILITIES

REV.	DESCRIPTION	SUB.	APP.

REGISTERED PROFESSIONAL ENGINEER STATE OF CALIFORNIA

DESIGNED: CHECKED:

DRAWN: REVIEWED:

SUBMITTED:

APPROVAL RECOMMENDED: DATE:

APPROVED: DATE:

THINK SAFETY - ACT SAFELY

STATE WATER FACILITIES
DROUGHT EMERGENCY

TEMPORARY ROCK BARRIER
2015

WEST FALSE RIVER

WEST FALSE RIVER

DETAILS AND SECTION

SPEC. NO.	SHEET NO.	REVISION	DRAWING NO.
15-04	005		C-204

VI= Plot.BW.22x34.PEN
4/13/2015