Bowen Collins & Associates, Inc.
CONSULTING ENGINEERS

SITE LOCATION MAP

Imagery: USDA NAIP 2011

Davis County

MILL CREEK SEDIMENT BASIN PROJECT

NORTH:

SCALE: 0 500 1,000 Feet

FIGURE NO. 1B

P:\Davis County\Mill Creek Sediment Basin\2.0 - Design Phase\2.14 Environmental\5.0 Permits\2.0 Submitted Permits\ACOE--Individual Permit\GIS\Figure1B_SiteLocation_Aerial.mxd mdavis 4/9/2014

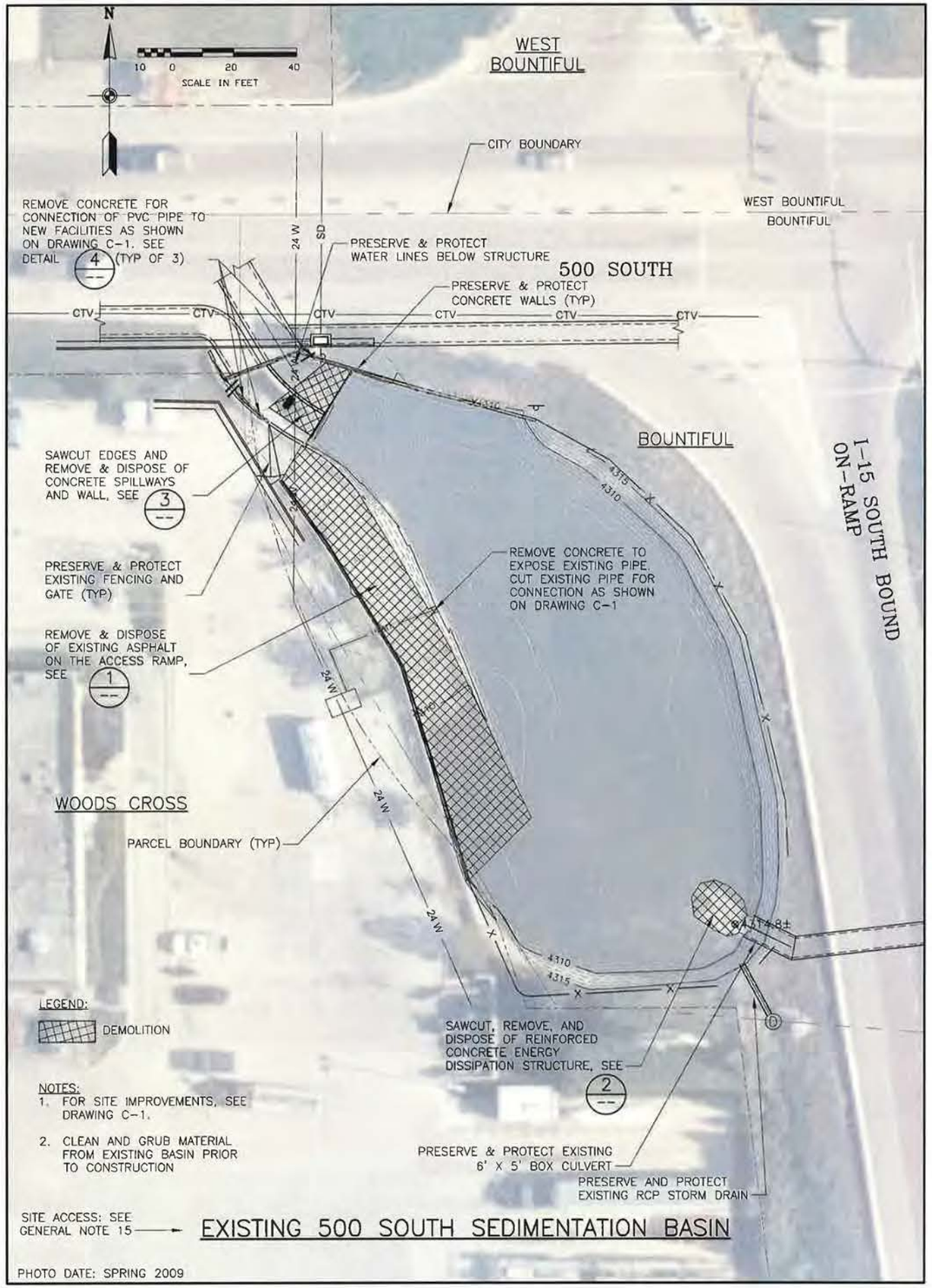

EXISTING 500 SOUTH SEDIMENTATION BASIN

RIPRAP AND ARMOR PROTECTION 1

SCALE: NTS

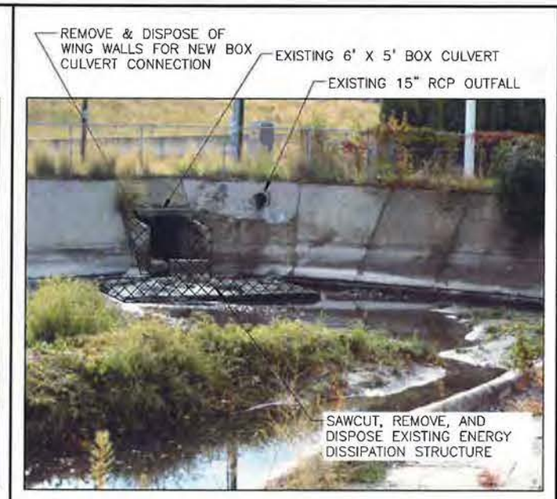

ENERGY DISSIPATION STRUCTURE 2

SCALE: NTS

SAWCUT, REMOVE, AND DISPOSE EXISTING CONCRETE SPILLWAYS AND WALL

CONCRETE SPILLWAY 3

SCALE: NTS

REMOVE CONCRETE AROUND EXISTING DRAINS FOR CONNECTION TO NEW STRUCTURE (TYP OF 3)

DRAIN PIPE CONNECTORS 4

SCALE: NTS

Bowen Collins & Associates, Inc. Consulting Engineers

95% REVIEW

NO.	DATE	REV. BY	DESCRIPTION

REVISIONS

VERIFY SCALE
BAR IS ONE INCH ON ORIGINAL DRAWING

MILL CREEK SEDIMENT BASIN PROJECT
WEST BOUNTIFUL, UTAH

DAVIS COUNTY PUBLIC WORKS

DESIGN
DESIGN T. OLSEN
DRAWN B. BAUCOM
REVIEW
CHECKED C. BAGLEY
APPROVED T. OLSEN

CIVIL
500 SOUTH SEDIMENT BASIN DEMOLITION PLAN

DATE: SEPTEMBER 2011
PROJECT NUMBER 054-11-01

DRAWING NO. D-1

SHEET 4 OF 18

P:\Davis County\Mill Creek Sediment Basin\2.0 - Design Phase\2.10 Drawings\Final Design\SHT\054110T_D01.dwg Sep26,2011 - 10:42am

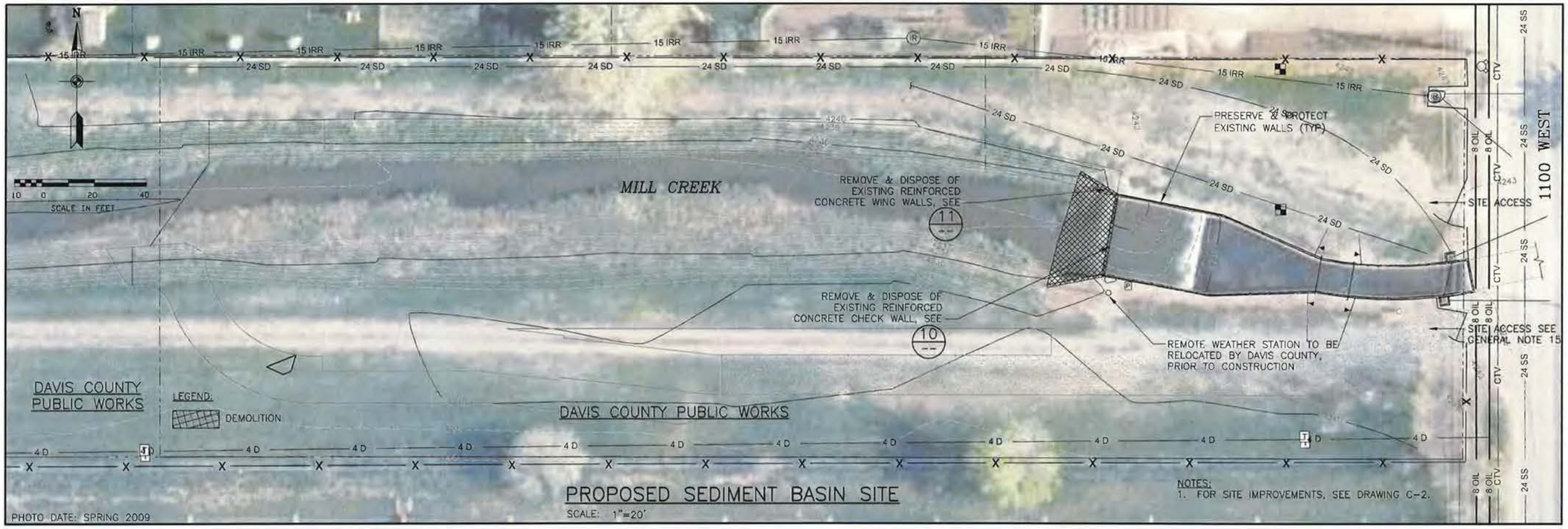

PROPOSED SEDIMENT BASIN SITE

SCALE: 1"=20'

NOTES:
1. FOR SITE IMPROVEMENTS, SEE DRAWING C-2.

SAWCUT, REMOVE, AND DISPOSE EXISTING CHECK WALL

EXISTING CHECK WALL (10)

SCALE: NTS

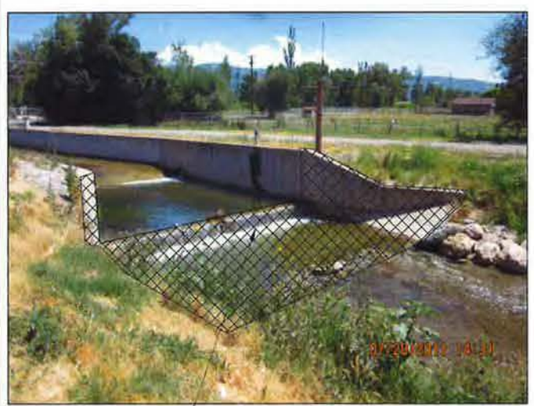

SAWCUT, REMOVE, AND DISPOSE CHECK AND WING WALLS

EXISTING CHECK AND WING WALLS (11)

SCALE: NTS

Bowen Collins & Associates, Inc. Consulting Engineers

95% REVIEW

NO.	DATE	REV. BY	DESCRIPTION

REVISIONS

MILL CREEK SEDIMENT BASIN PROJECT
DAVIS COUNTY PUBLIC WORKS
WEST BOUNTIFUL, UTAH

VERIFY SCALE
BAR IS ONE INCH ON ORIGINAL DRAWING

DESIGN
DESIGN T. OLSEN
DRAWN B. BAUCOM

REVIEW
CHECKED C. BAGLEY
APPROVED T. OLSEN

CIVIL
PROPOSED SEDIMENT BASIN SITE DEMOLITION PLAN

DATE: SEPTEMBER 2011
PROJECT NUMBER 054-11-01

DRAWING NO. D-2

SHEET 5 OF 18

P:\Davis County\Mill Creek Sediment Basin\2.0 - Design Phase\2.10 Drawings\Final Design\Sht\0541101_002.dwg Sep26,2011 - 10:45am

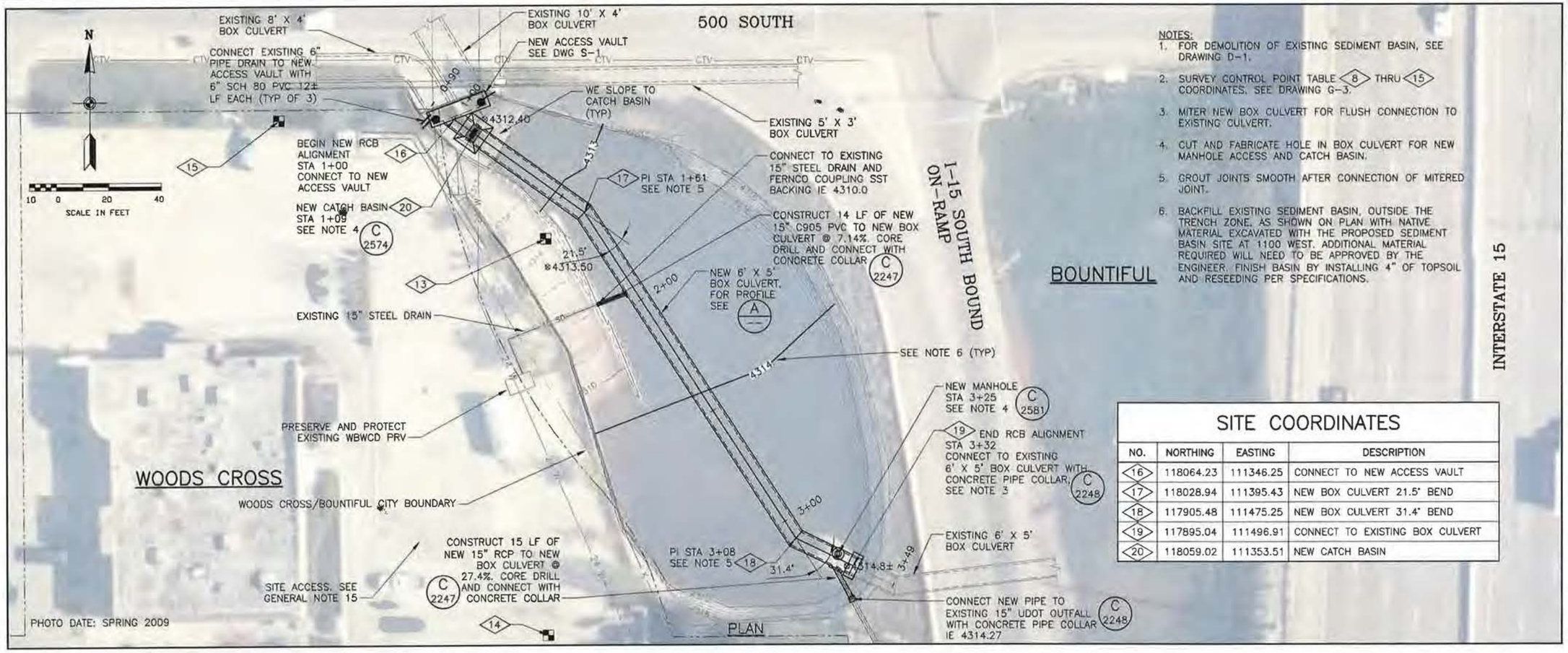

NOTES:

1. FOR DEMOLITION OF EXISTING SEDIMENT BASIN, SEE DRAWING D-1.
2. SURVEY CONTROL POINT TABLE 8 THRU 15 COORDINATES. SEE DRAWING G-3.
3. MITER NEW BOX CULVERT FOR FLUSH CONNECTION TO EXISTING CULVERT.
4. CUT AND FABRICATE HOLE IN BOX CULVERT FOR NEW MANHOLE ACCESS AND CATCH BASIN.
5. GROUT JOINTS SMOOTH AFTER CONNECTION OF MITERED JOINT.
6. BACKFILL EXISTING SEDIMENT BASIN, OUTSIDE THE TRENCH ZONE, AS SHOWN ON PLAN WITH NATIVE MATERIAL EXCAVATED WITH THE PROPOSED SEDIMENT BASIN SITE AT 1100 WEST. ADDITIONAL MATERIAL REQUIRED WILL NEED TO BE APPROVED BY THE ENGINEER. FINISH BASIN BY INSTALLING 4" OF TOPSOIL AND RESEEDING PER SPECIFICATIONS.

SITE COORDINATES

NO.	NORTHING	EASTING	DESCRIPTION
16	118064.23	111346.25	CONNECT TO NEW ACCESS VAULT
17	118028.94	111395.43	NEW BOX CULVERT 21.5° BEND
18	117905.48	111475.25	NEW BOX CULVERT 31.4° BEND
19	117895.04	111496.91	CONNECT TO EXISTING BOX CULVERT
20	118059.02	111353.51	NEW CATCH BASIN

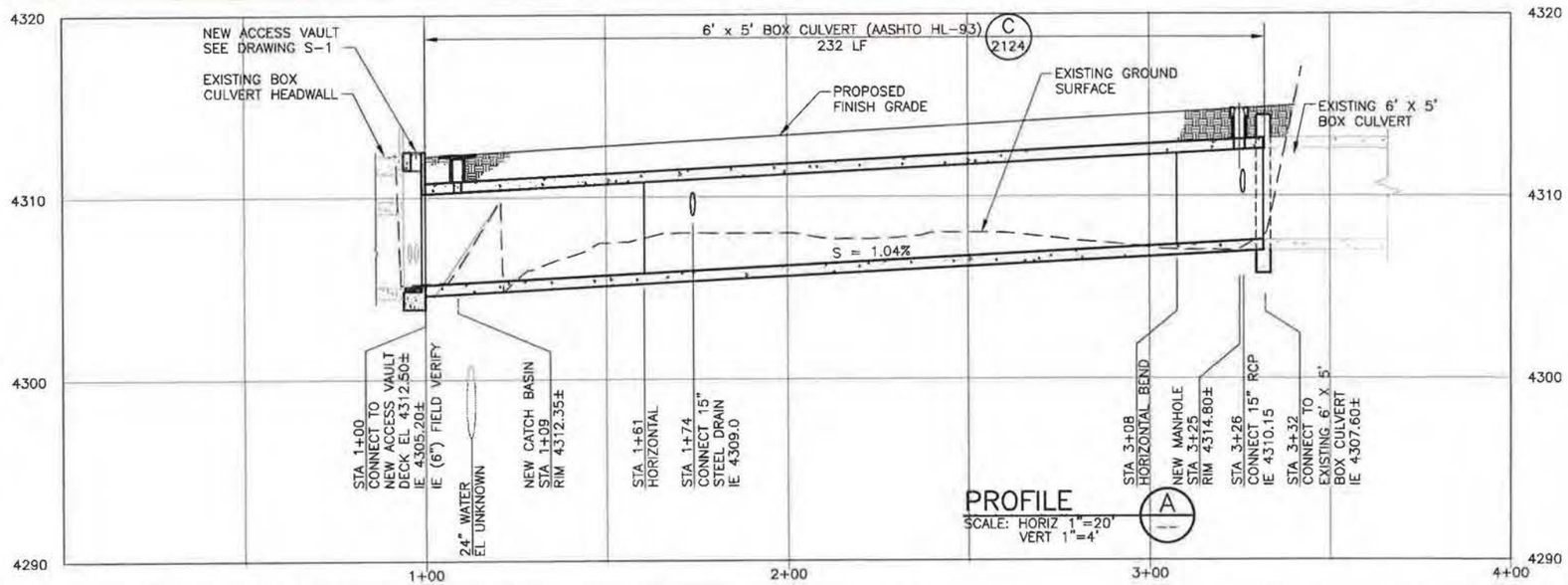

PROFILE
SCALE: HORIZ 1"=20'
VERT 1"=4'

Bowen Collins & Associates, Inc.

95% REVIEW

NO.	DATE	REV. BY	DESCRIPTION

REVISIONS

MILL CREEK SEDIMENT BASIN PROJECT
DAVIS COUNTY PUBLIC WORKS
WEST BOUNTIFUL, UTAH

VERIFY SCALE
BAR IS ONE INCH ON ORIGINAL DRAWING

REVIEW
CHECKED C. BAGLEY
APPROVED T. OLSEN

DESIGN
DESIGN T. OLSEN
DRAWN B. BAUCOM

CIVIL
EXISTING 500 SOUTH SEDIMENT BASIN PLAN

DATE: SEPTEMBER 2011
PROJECT NUMBER 054-11-01

DRAWING NO.
C-1

SHEET 6 OF 18

P:\Davis County\Mill Creek Sediment Basin\2.0 - Design Phase\2.10 Drawings\Final Design\Sht\054110I_C01.dwg Sep26,2011 - 10:38am

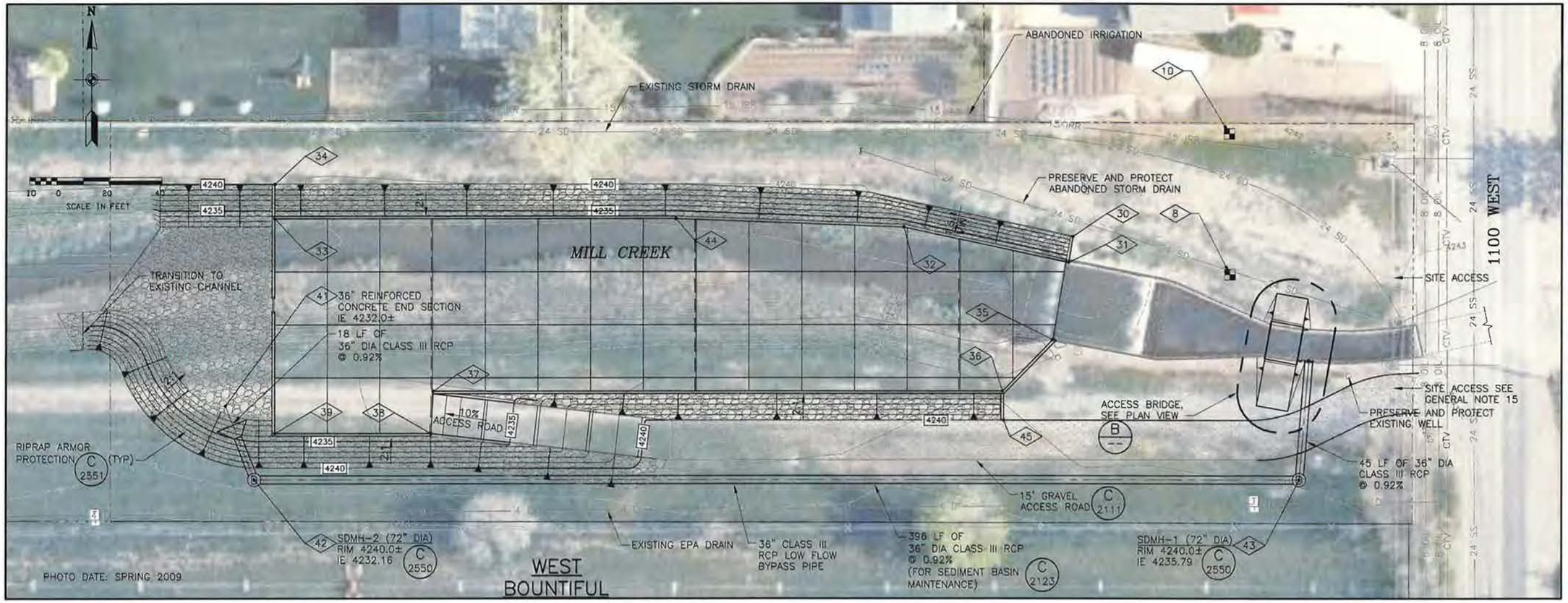

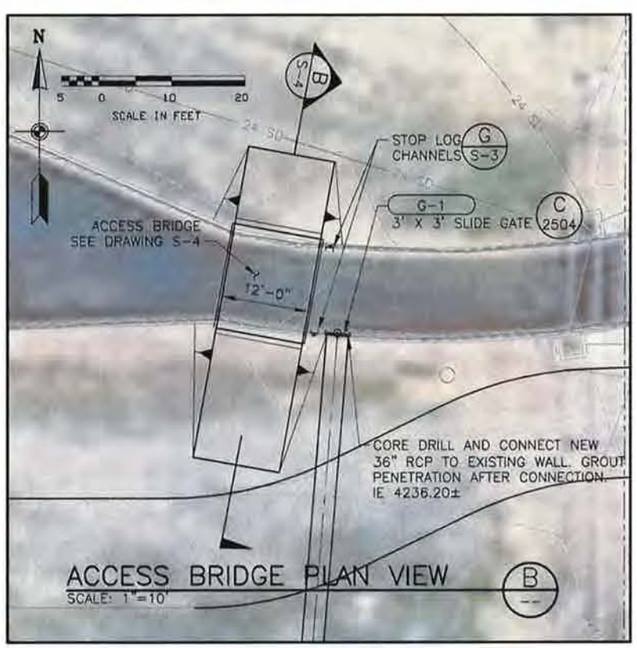

SITE COORDINATES

NO.	NORTHING	EASTING	DESCRIPTION
30	120158.97	107376.30	NORTH WALL NE CORNER
31	120149.10	107374.65	NORTH WALL SE CORNER
32	120162.46	107312.41	NORTH WALL
33	120165.63	107073.70	NORTH WALL SW CORNER
34	120178.63	107073.70	NORTH WINGWALL
35	120120.04	107368.74	SOUTH WALL NE CORNER
36	120100.63	107349.77	SOUTH WALL SE CORNER
37	120100.63	107134.02	SOUTH WALL SW CORNER
38	120084.63	107133.13	WALL NEAR ACCES ROAD
39	120084.63	107073.70	SOUTH WALL SW CORNER
41	120095.06	107055.03	END SECTION
42	120067.13	107065.97	SDMH-2
43	120067.13	107462.17	SDMH-1
44	120165.63	107226.11	NORTH WALL
45	120089.63	107350.19	SOUTH WALL

NOTES:

1. FOR DEMOLITION OF EXISTING SEDIMENT BASIN, SEE DRAWING D-2.
2. SURVEY CONTROL POINT TABLE 8 THRU 15 COORDINATES, SEE DRAWING G-3.

Bowen Collins & Associates, Inc. Consulting Engineers

95% REVIEW

NO.	DATE	REV. BY	DESCRIPTION

REVISIONS

MILL CREEK SEDIMENT BASIN PROJECT
DAVIS COUNTY PUBLIC WORKS
WEST BOUNTIFUL, UTAH

VERIFY SCALE
BAR IS ONE INCH ON ORIGINAL DRAWING

REVIEW
CHECKED C. BAGLEY
APPROVED T. OLSEN

DESIGN
DESIGN T. OLSEN
DRAWN B. BAUCOM

CIVIL
PROPOSED SEDIMENT BASIN PLAN

DATE: SEPTEMBER 2011
PROJECT NUMBER 054-11-01

DRAWING NO.
C-2
SHEET 7 OF 18

I:\Davis County\Mill Creek Sediment Basin\2.0 - Design Phase\2.10 Drawings\Final Design\Sht\0541101_C02.dwg Sep26,2011 - 10:40am

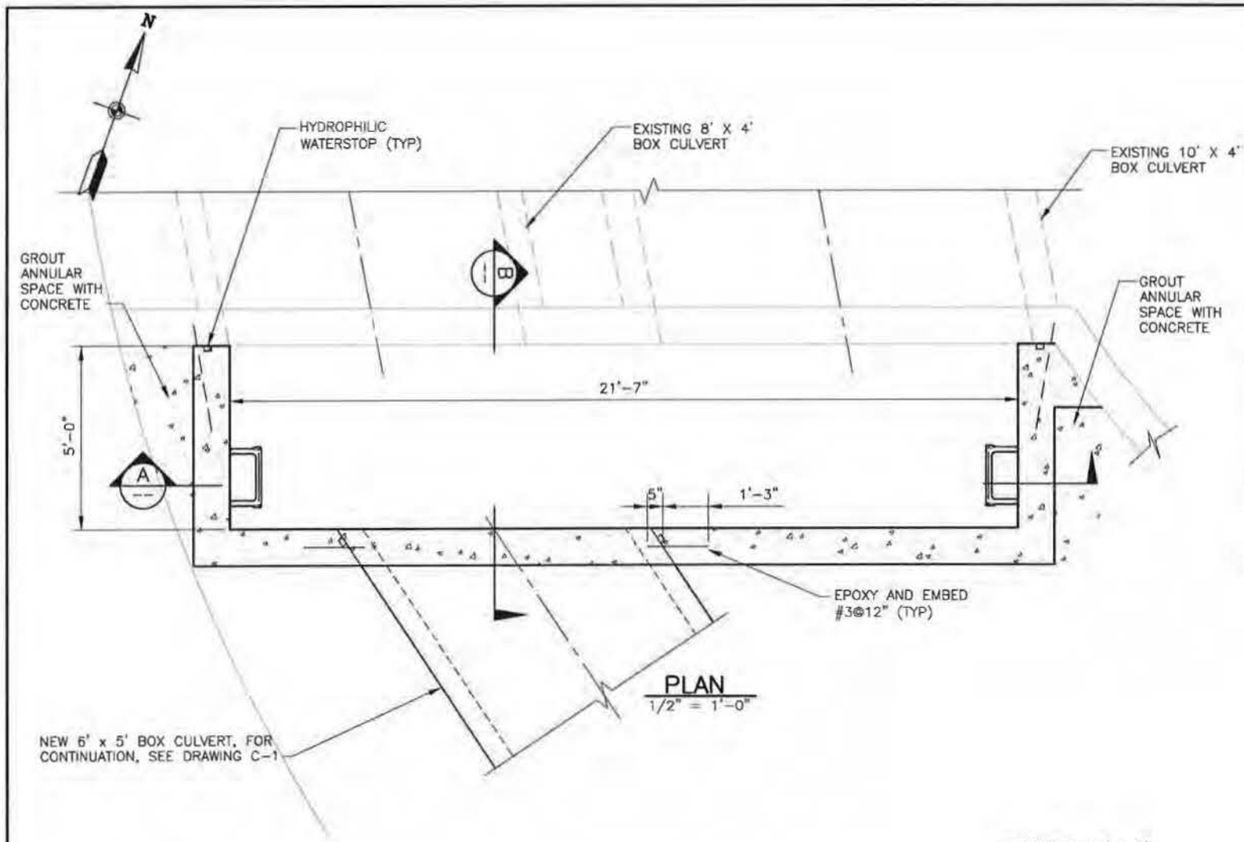

PLAN
1/2" = 1'-0"

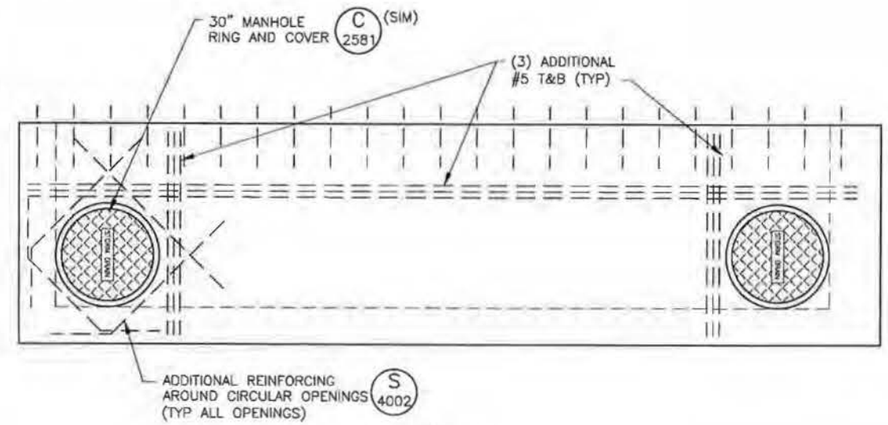

ROOF PLAN
1/2" = 1'-0"

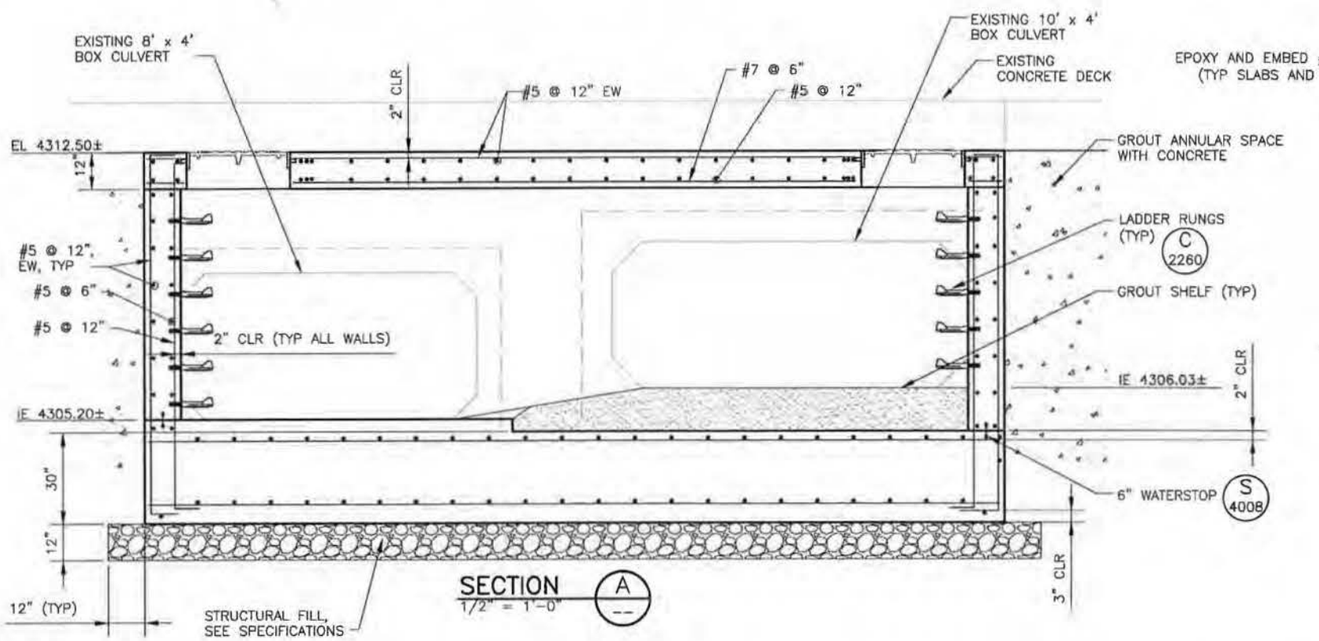

SECTION A
1/2" = 1'-0"

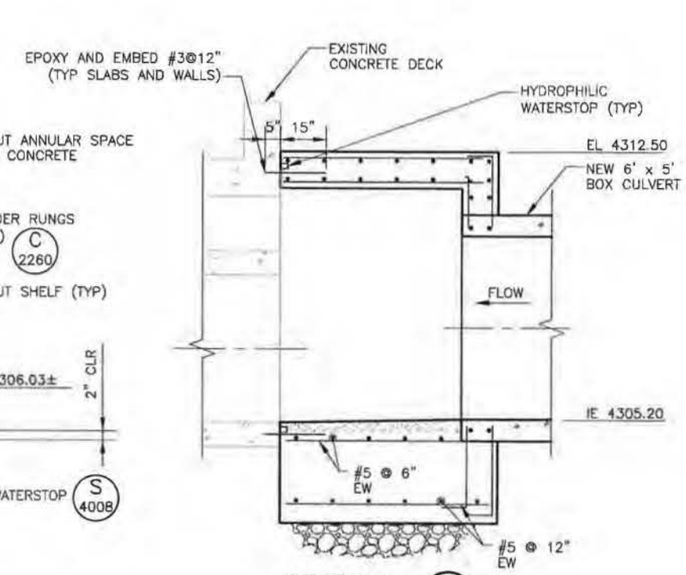

SECTION B
1/2" = 1'-0"

Bowen Collins & Associates, Inc.
Consulting Engineers

95% REVIEW

NO.	DATE	REV. BY	DESCRIPTION

REVISIONS

VERIFY SCALE
BAR IS ONE INCH ON ORIGINAL DRAWING

MILL CREEK SEDIMENT BASIN PROJECT
DAVIS COUNTY PUBLIC WORKS
WEST BOUNTIFUL, UTAH

DESIGN
DESIGN TO / BM
DRAWN B. ABEL

REVIEW
CHECKED C. BAGLEY
APPROVED T. OLSEN

STRUCTURAL
500 SOUTH SEDIMENT BASIN ACCESS VAULT

DATE: SEPTEMBER 2011
PROJECT NUMBER 054-11-01

DRAWING NO.
S-1

SHEET 11 OF 18

R:\Davis County\Mill Creek Sediment Basin\2.0 - Design Phase\2.10 Drawings\Final Design\SN\0541101_S01.dwg Sep26,2011 - 10:34am

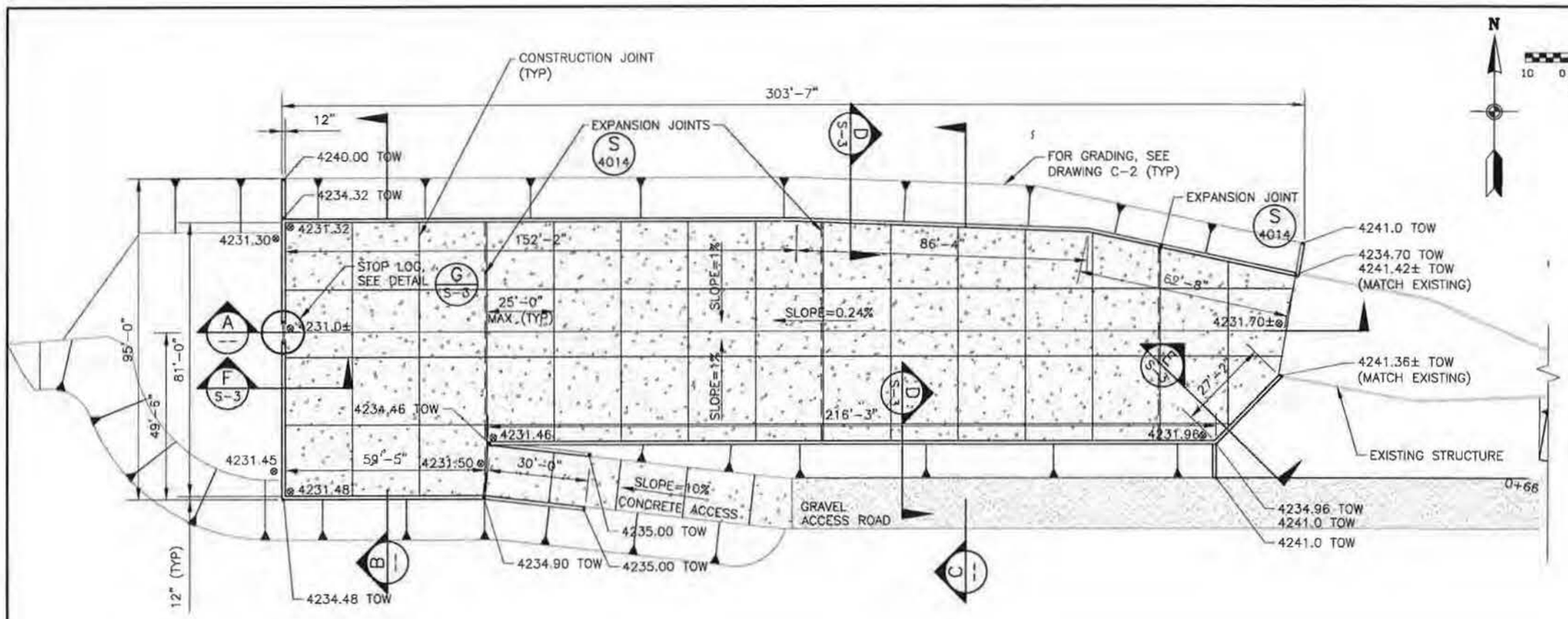

PLAN
SCALE: 1"=20'

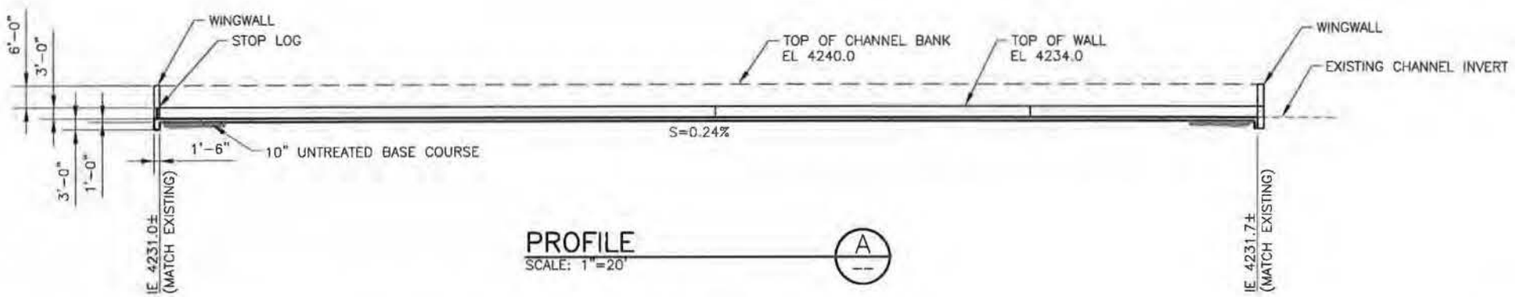

PROFILE
SCALE: 1"=20'
A --

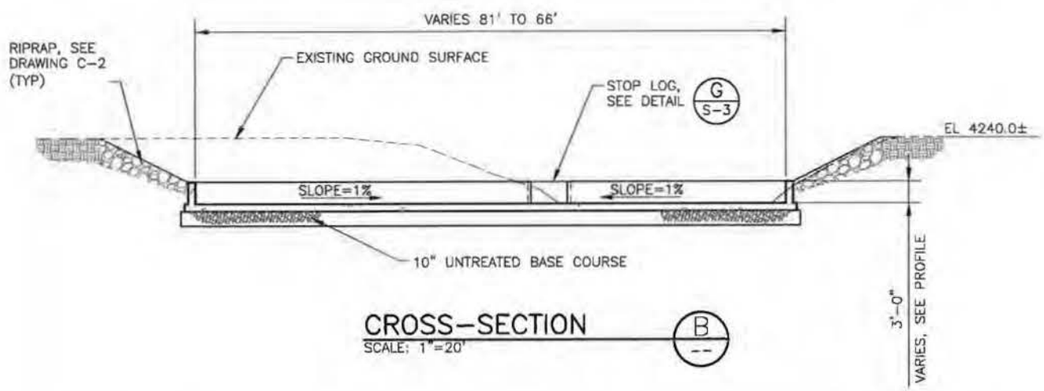

CROSS-SECTION
SCALE: 1"=20'
B --

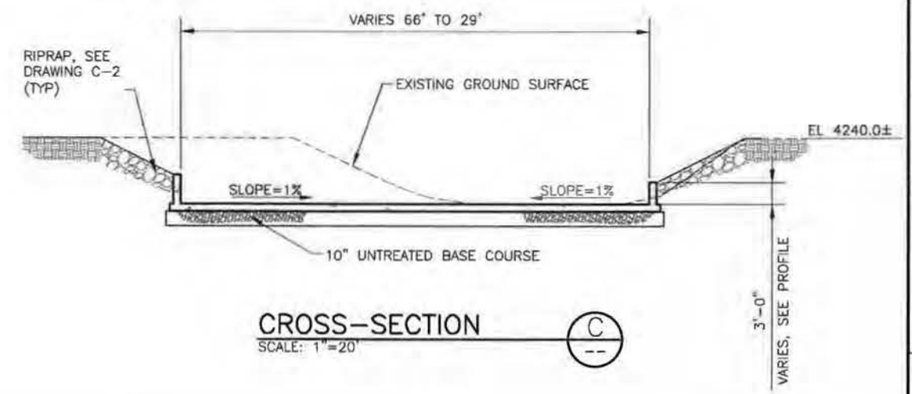

CROSS-SECTION
SCALE: 1"=20'
C --

Bowen Collins & Associates, Inc. Consulting Engineers

95% REVIEW

NO.	DATE	REV. BY	DESCRIPTION

REVISIONS

MILL CREEK SEDIMENT BASIN PROJECT
DAVIS COUNTY PUBLIC WORKS
WEST BOUNTIFUL, UTAH

VERIFY SCALE
BAR IS ONE INCH ON ORIGINAL DRAWING

REVIEW
CHECKED C. BAGLEY
APPROVED T. OLSEN

DESIGN
DESIGN T. OLSEN
DRAWN B. BAUCOM

CIVIL

SEDIMENT BASIN SECTIONS AND DETAILS - 1

DATE: SEPTEMBER 2011
PROJECT NUMBER 054-11-01

DRAWING NO.
S-2

SHEET 12 OF 18

P:\Davis County\Mill Creek Sediment Basin\2.0 - Design Phase\2.10 Drawings\Final Design\SR\0541101_S02.dwg Sep26,2011 - 10:35am

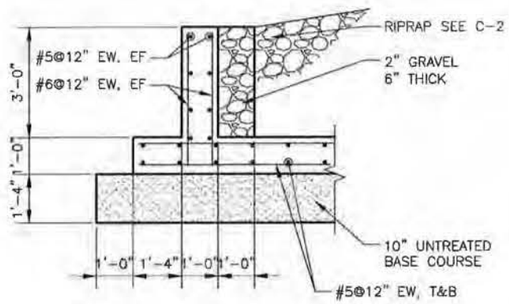

SECTION D S-2
1/2" = 1'-0"

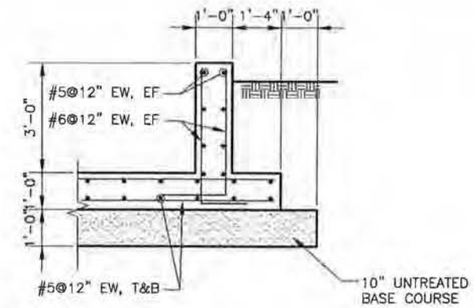

SECTION E S-2
1/2" = 1'-0"

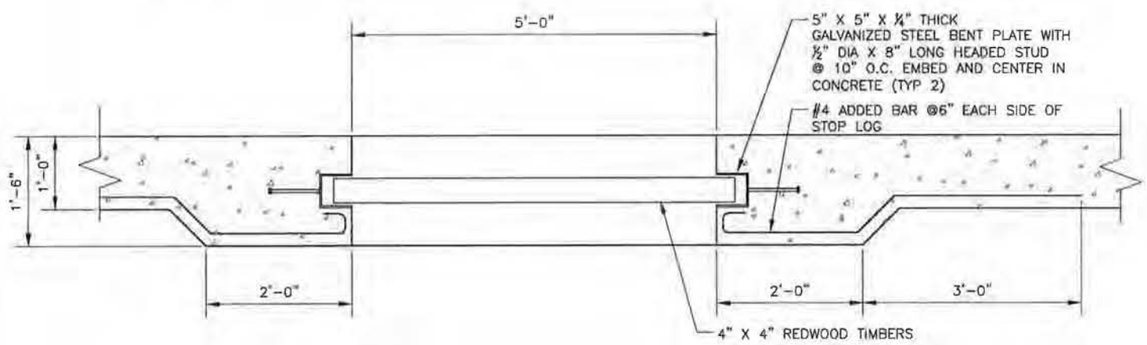

STOP LOG DETAIL G S-2
SCALE: 1"=1'-0"

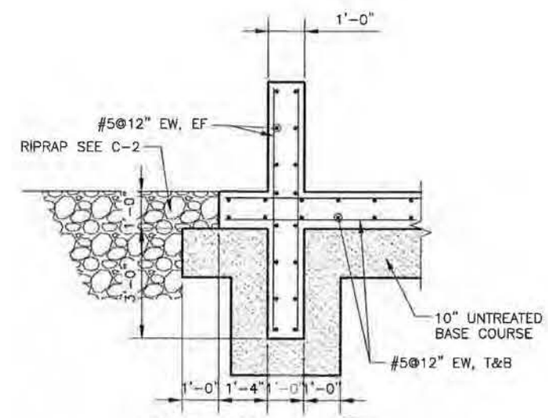

SECTION F S-2
1/2" = 1'-0"

Bowen Collins & Associates, Inc.
Consulting Engineers

95% REVIEW

NO.	DATE	REV. BY	DESCRIPTION

REVISIONS

MILL CREEK SEDIMENT BASIN PROJECT
DAVIS COUNTY PUBLIC WORKS
WEST BOUNTIFUL, UTAH

VERIFY SCALE
BAR IS ONE INCH ON ORIGINAL DRAWING

DESIGN TO / BM
DRAWN B. ABEL
REVIEW C. BAGLEY
APPROVED T. OLSEN

STRUCTURAL
PROPOSED SEDIMENT BASIN SECTIONS AND DETAILS

DATE: SEPTEMBER 2011
PROJECT NUMBER 054-11-01

DRAWING NO.
S-3

SHEET 13 OF 18

P:\Davis County\Mill Creek Sediment Basin\2.0 - Design Phase\2.10 Drawings\Final Design\SHT\0541101_S03.dwg Sep26,2011 - 10:36am

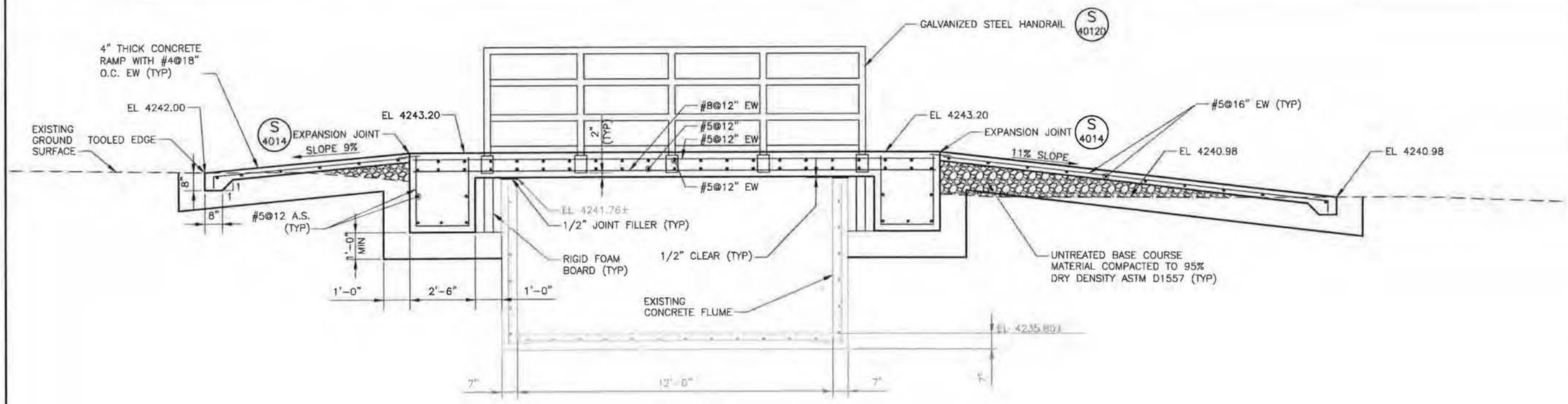

ACCESS BRIDGE PROFILE

SCALE: 1/2" = 1'-0"

B / C-2

Bowen Collins & Associates, Inc.

95% REVIEW

NO.	DATE	REV BY	DESCRIPTION

REVISIONS

MILL CREEK SEDIMENT BASIN PROJECT

DAVIS COUNTY PUBLIC WORKS

WEST BOUNTIFUL, UTAH

VERIFY SCALE

BAR IS ONE INCH ON ORIGINAL DRAWING

DESIGN

DESIGN TO / BM

DRAWN B. ABEL

REVIEW

CHECKED C. BAGLEY

APPROVED T. OLSEN

STRUCTURAL

ACCESS BRIDGE PLAN AND SECTION

DATE: SEPTEMBER 2011

PROJECT NUMBER 054-11-01

DRAWING NO. S-4

SHEET 14 OF 18

P:\Davis County\Mill Creek Sediment Basin\2.0 - Design Phase\2.10 Drawings\Final Design\Sht\054110t_S04.dwg Sep26,2011 - 10:37am