Kings Canyon Segment 3
Permit Impacts Map
Fresno County 06-43253
State Route 180 PM R74.1-R78.6

November 4, 2013

Caltrans

Kings Canyon Segment 3
Permit Impacts Map
Fresno County 06-43253
State Route 180 PM R74.1-R78.6

November 4, 2013

Caltrans

Kings Canyon Segment 3
Permit Impacts Map
Fresno County 06-43253
State Route 180 PM R74.1-R78.6

November 4, 2013

Caltrans

1 inch = 200 feet

Dist	COUNTY	ROUTE	POST MILES TOTAL PROJECT	SHEET No.	TOTAL SHEETS
06	Fre	180	R74.1/R78.6		

REGISTERED CIVIL ENGINEER DATE

PLANS APPROVAL DATE

REGISTERED PROFESSIONAL ENGINEER No. Exp. CIVIL STATE OF CALIFORNIA

THE STATE OF CALIFORNIA OR ITS OFFICERS OR AGENTS SHALL NOT BE RESPONSIBLE FOR THE ACCURACY OR COMPLETENESS OF SCANNED COPIES OF THIS PLAN SHEET.

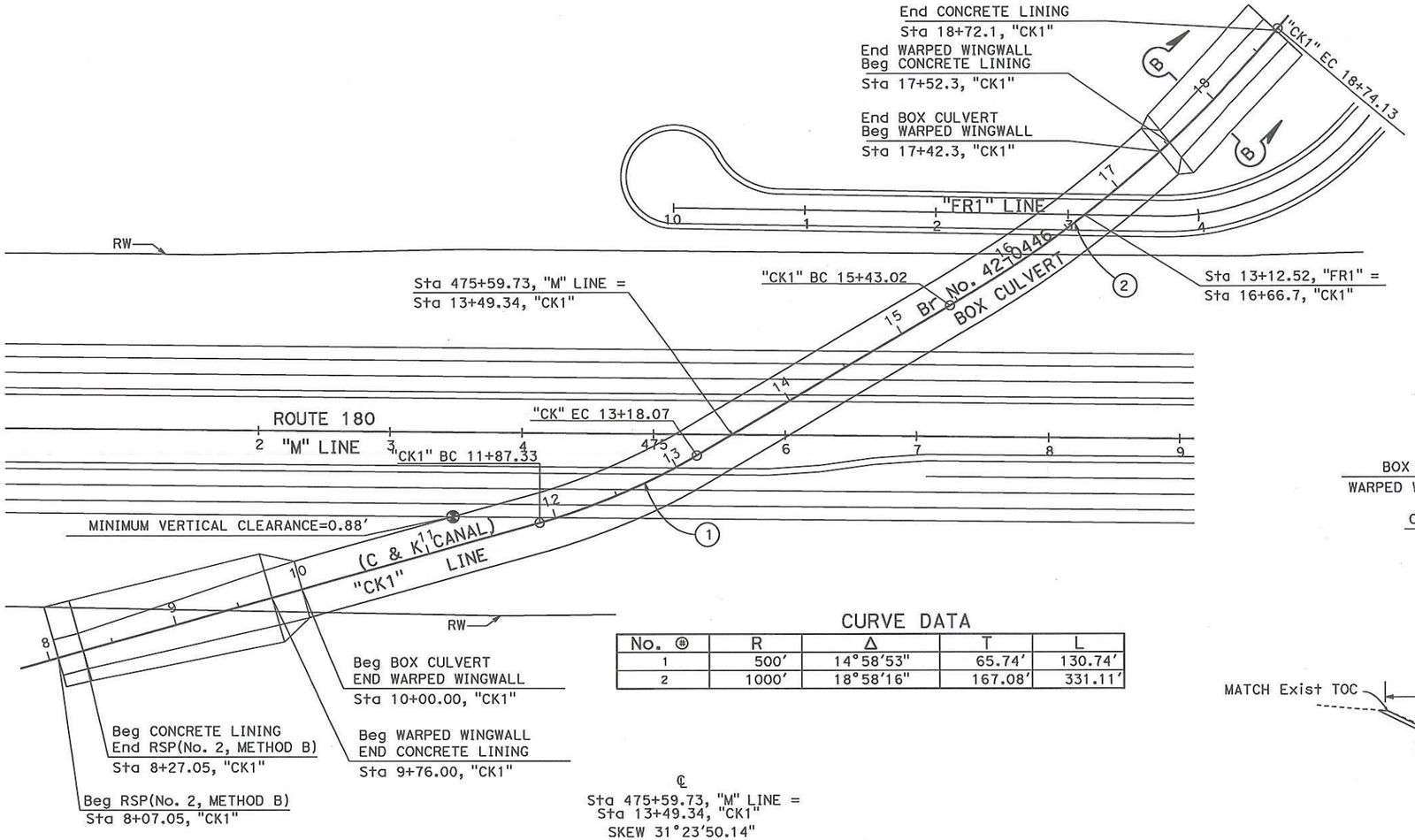

CURVE DATA

No. ⊕	R	Δ	T	L
1	500'	14°58'53"	65.74'	130.74'
2	1000'	18°58'16"	167.08'	331.11'

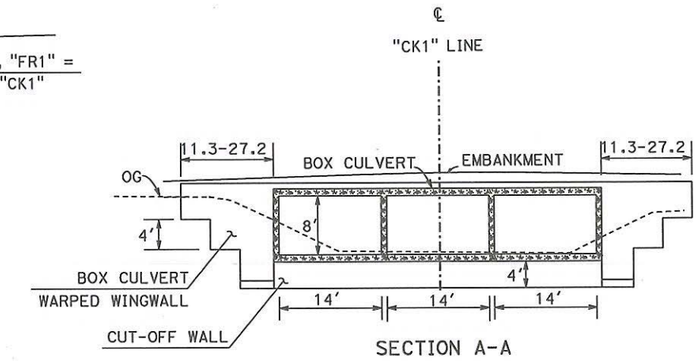

SECTION A-A

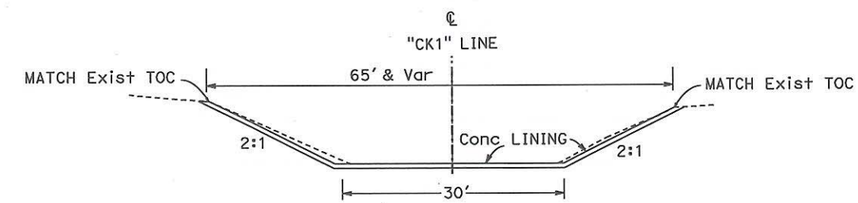

CONCRETE LINING

SECTION B-B

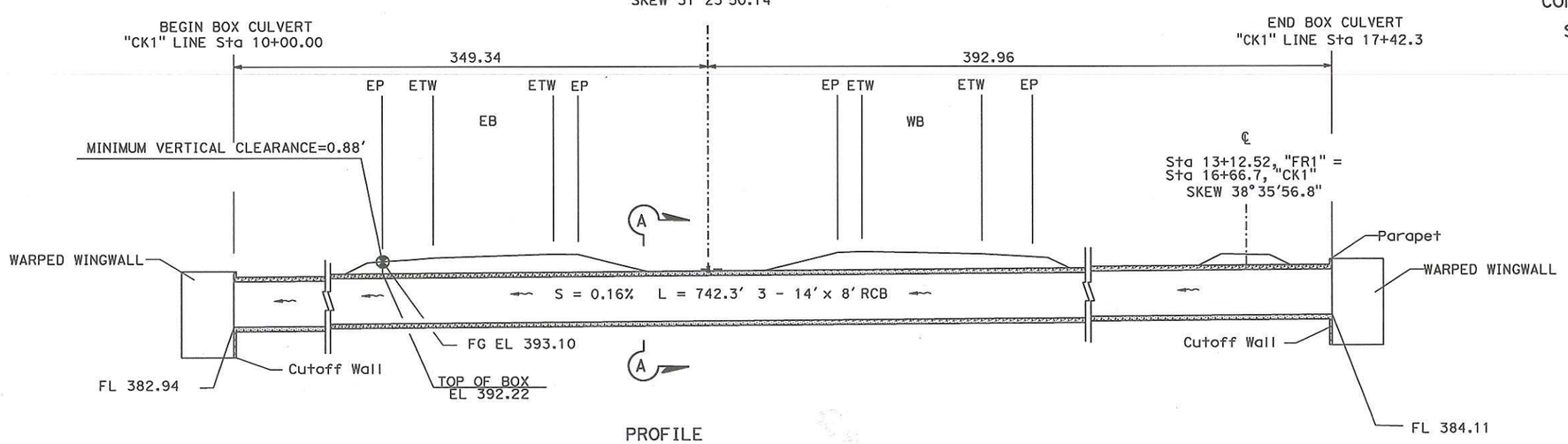

PROFILE

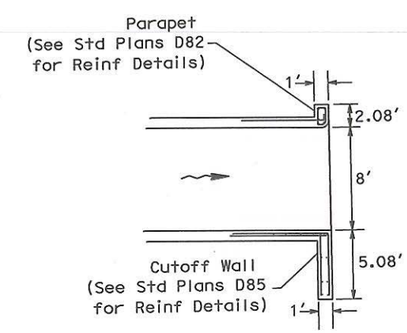

PARAPET & CUTOFF WALL DETAIL

BOX CULVERT (C&K CANAL)

DRAINAGE DETAILS

NO SCALE **DD-4**

REVISED BY	DATE REVISED

CALCULATED-DESIGNED BY | CHECKED BY

FUNCTIONAL SUPERVISOR

STATE OF CALIFORNIA - DEPARTMENT OF TRANSPORTATION

Caltrans

LAST REVISION 07-19-13 | DATE PLOTTED => 14-OCT-2013 | TIME PLOTTED => 09:13

Dist	COUNTY	ROUTE	POST MILES TOTAL PROJECT	SHEET No.	TOTAL SHEETS
06	Fre	180	71.8/75.4		

REGISTERED CIVIL ENGINEER DATE

PLANS APPROVAL DATE

REGISTERED PROFESSIONAL ENGINEER No. Exp. CIVIL STATE OF CALIFORNIA

THE STATE OF CALIFORNIA OR ITS OFFICERS OR AGENTS SHALL NOT BE RESPONSIBLE FOR THE ACCURACY OR COMPLETENESS OF SCANNED COPIES OF THIS PLAN SHEET.

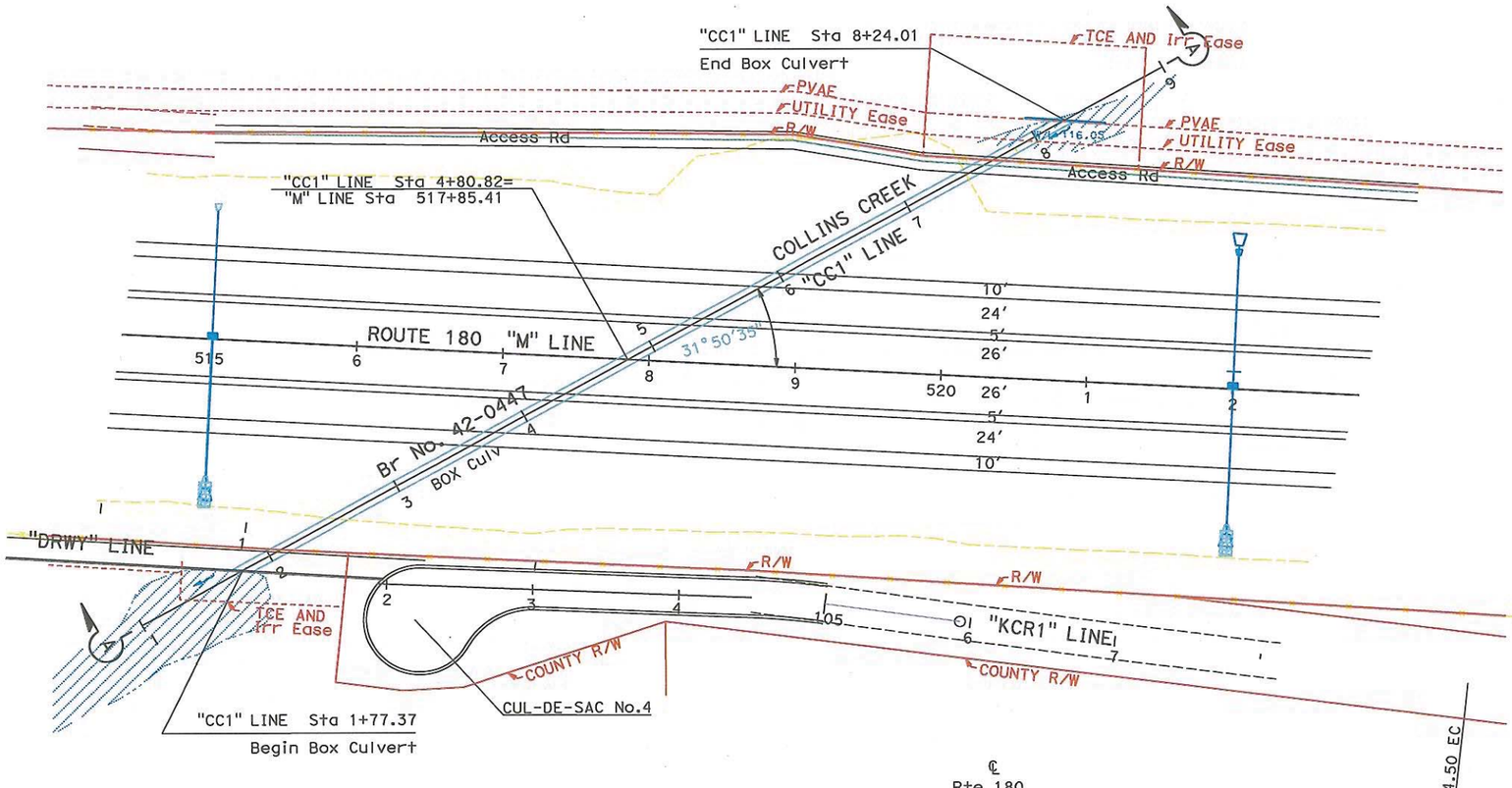

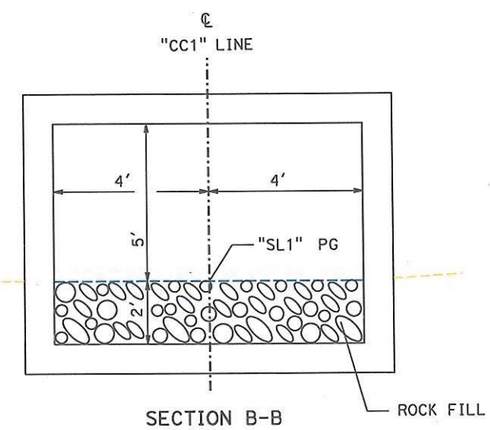

SECTION B-B

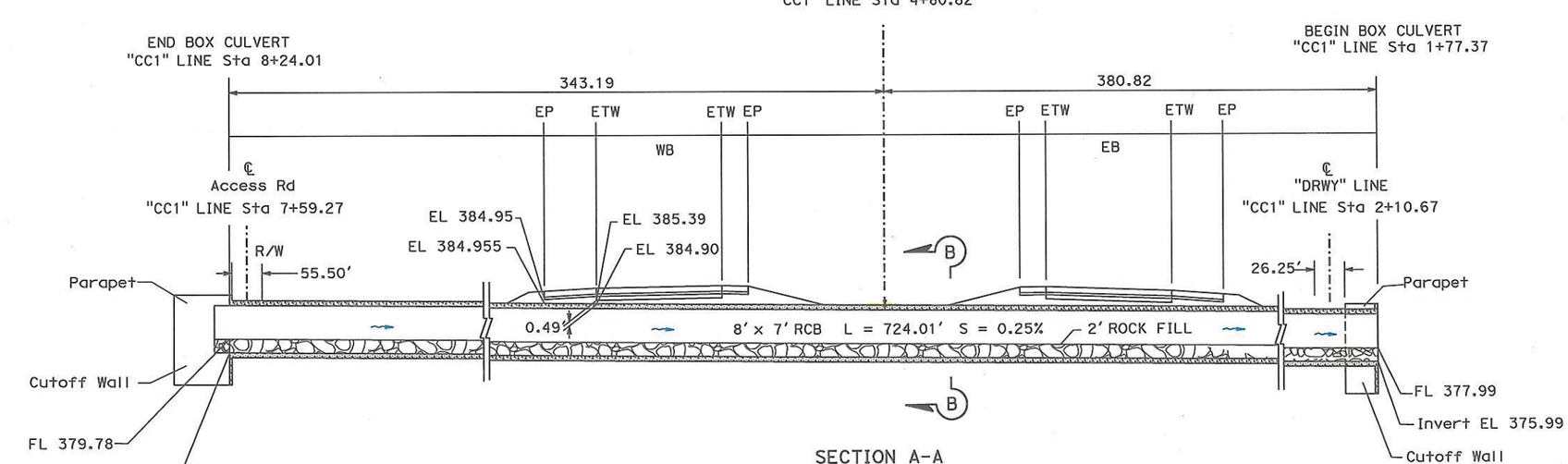

SECTION A-A

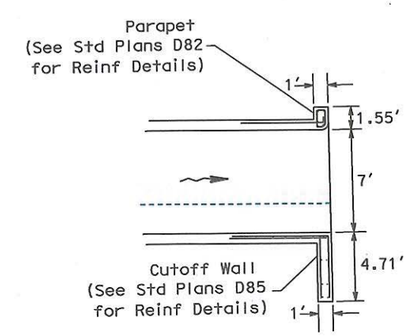

PARAPET & CUTOFF WALL DETAIL

BOX CULVERT (COLLINS CREEK)

DRAINAGE DETAILS

NO SCALE **DD-5**

REVISED BY	DATE REVISED
KRIS LAKSHMINARAYANAN	RONNIE KIER
CALCULATED-DESIGNED BY	CHECKED BY
FUNCTIONAL SUPERVISOR	SANKU GIREESH MOHAN

STATE OF CALIFORNIA - DEPARTMENT OF TRANSPORTATION **DESIGN**

Caltrans

LAST REVISION 03-21-13 | DATE PLOTTED => 14-OCT-2013 | TIME PLOTTED => 09:12