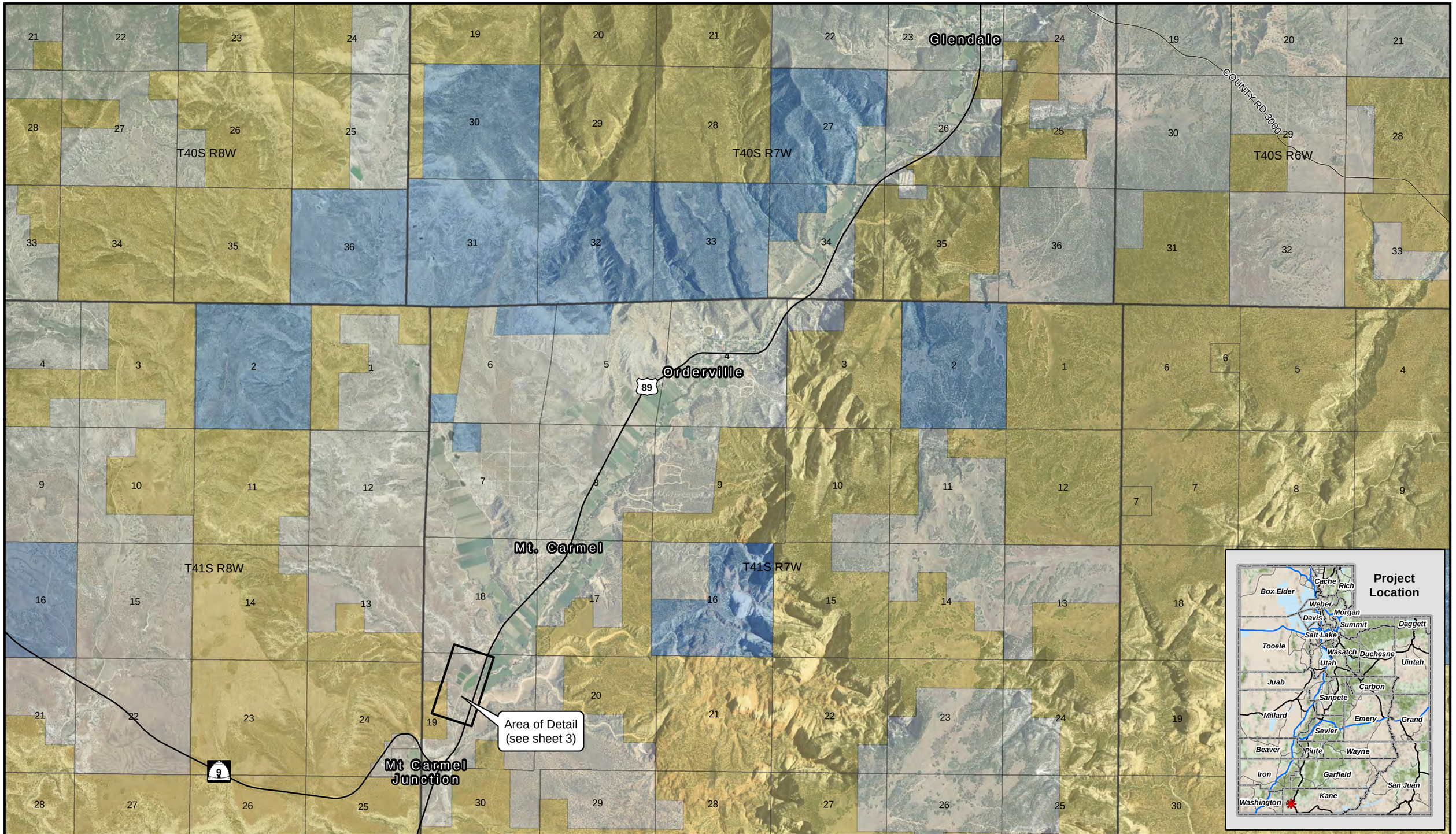

Land Ownership

- Bureau of Land Management
- Private
- State Trust Lands

Image date: June 22, 2011

Image source: National Agricultural Imagery Program (NAIP), USDA-FSA-APFO

NAD 83, State Plane Utah Central (US Feet)

N

0 2,000 4,000 Feet

Jones & DeMille Engineering

- infrastructure professionals -

800.748.5275 www.jonesanddemille.com

Long Valley Sewer Improvement District

Wastewater Improvements
Proposed Impacts to Waters of the U.S.

Map Name: H:\JD\Proj\1004-136\Design\GIS\Maps\USACE Wetland Permit\LVSID_USACE_Permit_Exhibit_Vicinity1.mxd

Project Number: 1004-136 | Drawn by: Adam Perschon - Jones & DeMille Engineering | Last Edit: 10/16/2013

KANE COUNTY

SCALE: 1 " = 4,000 '

1

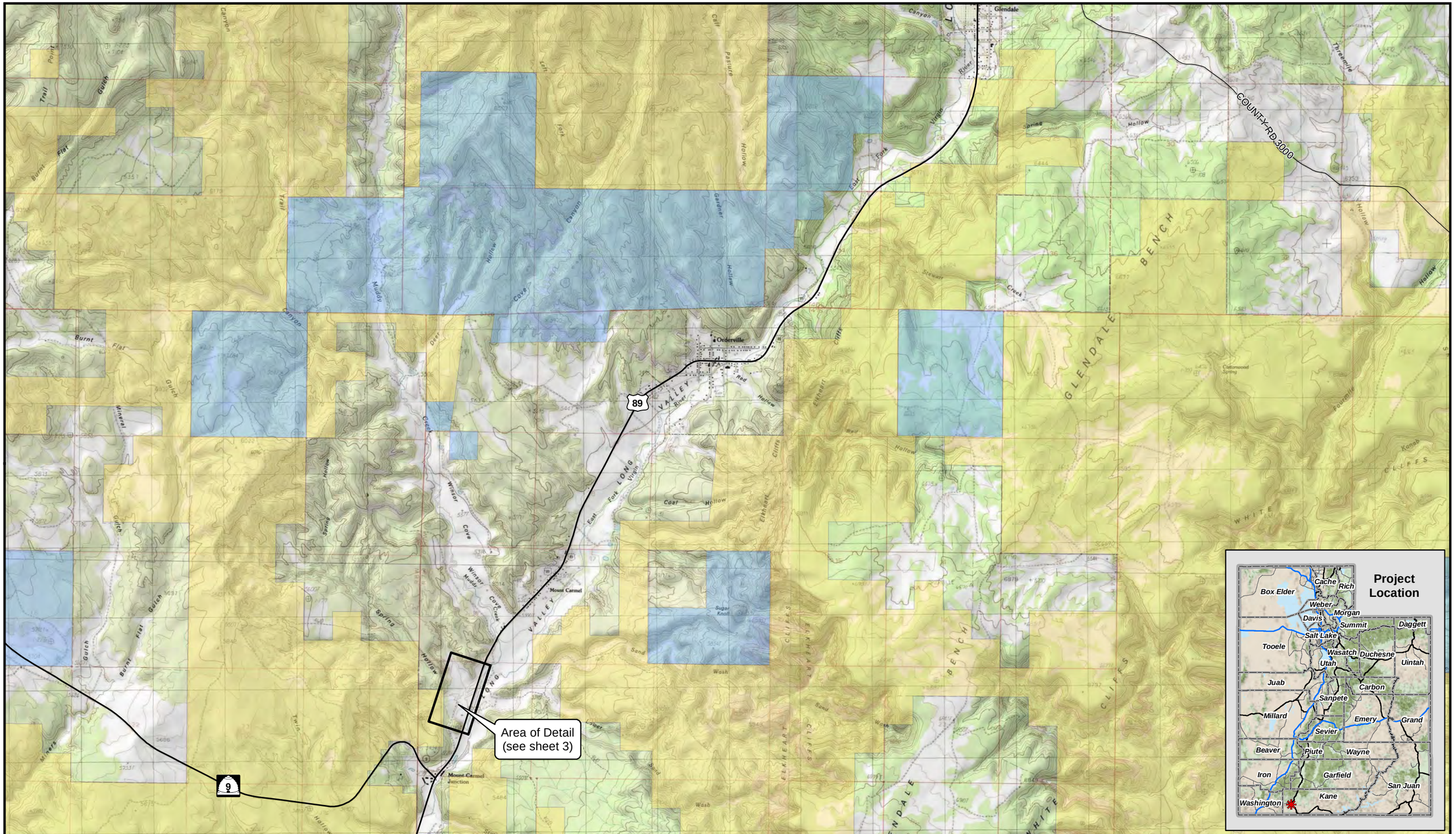

Land Ownership

- Bureau of Land Management
- Private
- State Trust Lands

Basemap: USGS Topo Map

Basemap source: National Geographic Society; i-cubed

NAD 83, State Plane Utah Central (US Feet)

N

0 2,000 4,000 Feet

Jones & DeMille Engineering

- infrastructure professionals -

800.748.5275 www.jonesanddemille.com

Long Valley Sewer Improvement District

Wastewater Improvements
Proposed Impacts to Waters of the U.S.

KANE COUNTY

SCALE: 1 " = 4,000 '

2

Map Name: H:\JD\Proj\1004-136\Design\GIS\Maps\USACE Wetland Permit\LVSID_USACE_Permit_Exhibit_\Icinity2.mxd

Project Number: 1004-136 | Drawn by: Adam Perschon - Jones & DeMille Engineering | Last Edit: 10/16/2013

Existing Ephemeral Channel Centerline (1,525 lf)

Existing Ephemeral Channel (1.96 ac)

Proposed Ephemeral Channel Centerline (1,280 lf)

Proposed Ephemeral Channel Cut/Fill Area (1.78 ac)

Proposed Lagoon Cut/Fill Area

Image date: August 8, 2013

Image Source: Aero-Graphics
FBO Jones & DeMille Engineering

NAD 83, State Plane Utah Central (US Feet)

N

0 100 200 Feet

Jones & DeMille Engineering

- infrastructure professionals -

800.748.5275 www.jonesanddemille.com

Long Valley Sewer Improvement District

KANE COUNTY

Wastewater Improvements
Proposed Impacts to Waters of the U.S.

SCALE: 1 " = 200 '

Map Name: H:\JD\Proj\1004-136\Design\GIS\Maps\USACE Wetland Permit\LVSID_USACE_Permit_Exhibit_Main.mxd

Project Number: 1004-136 | Drawn by: Adam Perschon - Jones & DeMille Engineering | Last Edit: 10/16/2013

3

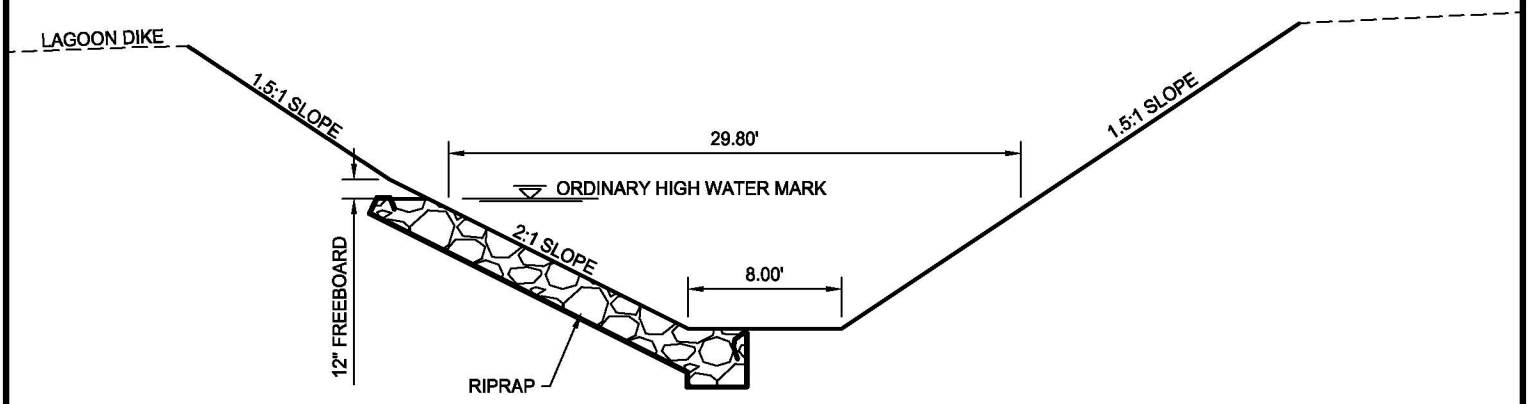

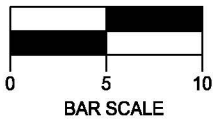

Jones & DeMille Engineering, Inc.
CIVIL ENGINEERING - SURVEYING - TESTING
GIS - ENVIRONMENTAL
- infrastructure professionals -
1.800.748.5275 www.jonesanddemille.com

N

SCALE: 1"=10'

KANE COUNTY			FIGURE: A
LONG VALLEY SEWER IMP. DISTRICT			
Proposed Channel Typical Cross-Section			
DRAWN: KJ 10-13	FILE: STREAMALTEXHIB	PROJECT: 1004-136	SHEET: 4
CHECK: JS 10-13	UPDATED: 10/16/2013	PLOTTED: 10/16/2013	