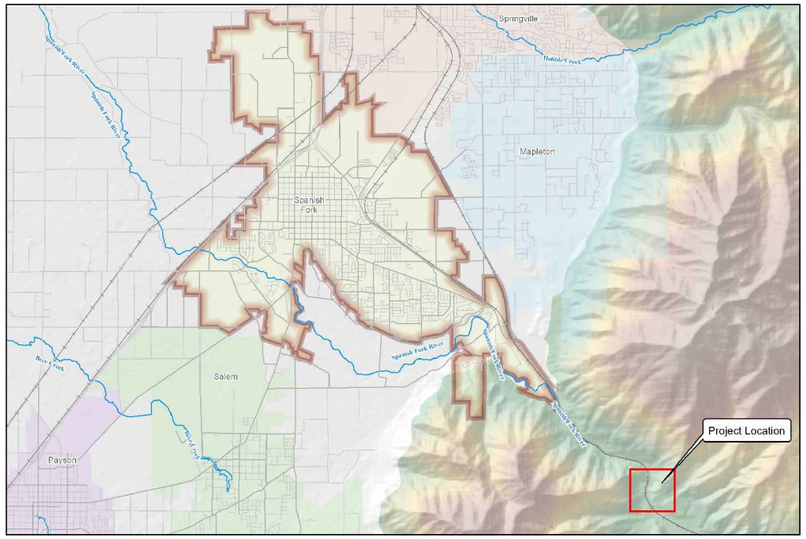

SURROUND Spanish Fork UTAH YOURSELF

PROGRESS PRINT
4.20.2012
DATE
Not to be used for construction.
Hansen, Allen, & Luce, Inc.
Consultants/Engineers

COLD SPRINGS REHABILITATION

APRIL 2012

HANSEN ALLEN & LUCE inc
ENGINEERS

FILE NAME: PROJECTS\348 - SPANISH FORK CITY\13.100 - COLD SPRINGS DEVELOPMENT\CAD\COVER.DWG
FILE DATE: 4.20.2012 08:52:35 (JEB)

2/02

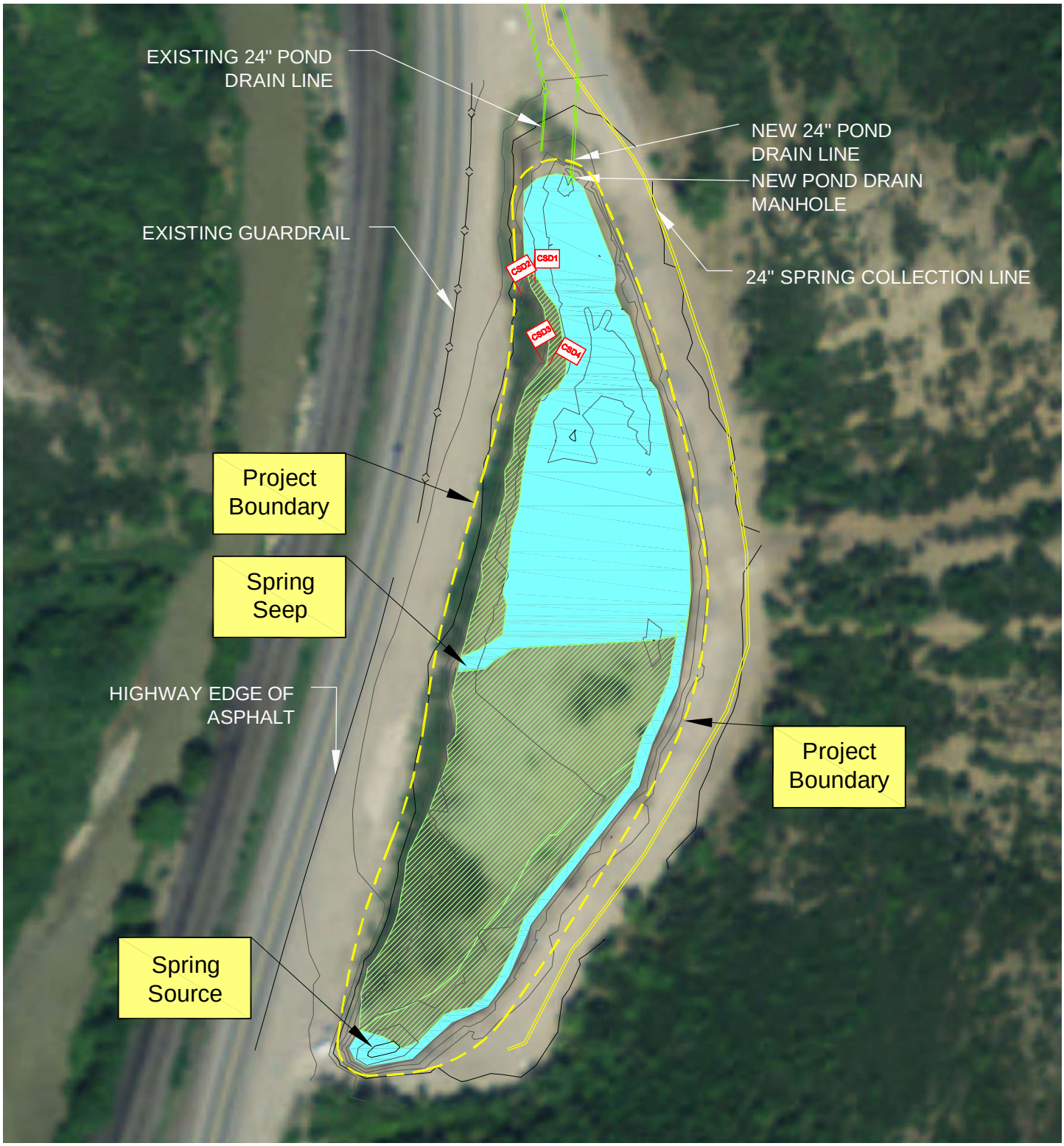

Legend

Inundated Land (1.05 ac)

Wetland (1.16 ac)

CSD# Wetland Data Point

N

0 60' 120'

IHI ENVIRONMENTAL
640 E. Wilmington Ave.
Salt Lake City, UT 84106
801.466.2223
ihi@ihi-env.com

Spanish Fork City
Cold Spring Site
Section 12, T9S, R3E
Spanish Fork, Utah

Figure 3 - Wetland Delineation Map

PROJECT No:	12U-N8011
SHEET NO:	3
DRAWN BY:	MBradley
DATE:	6-5-12
REVIEWED BY:	
DATE:	

R:\-12 Projects\12U-N8011-Spnsh Fork-Cold Spring\CAD\12UN8011.dwg, Fig3, 6/5/2012 2:44:42 PM, mikeb

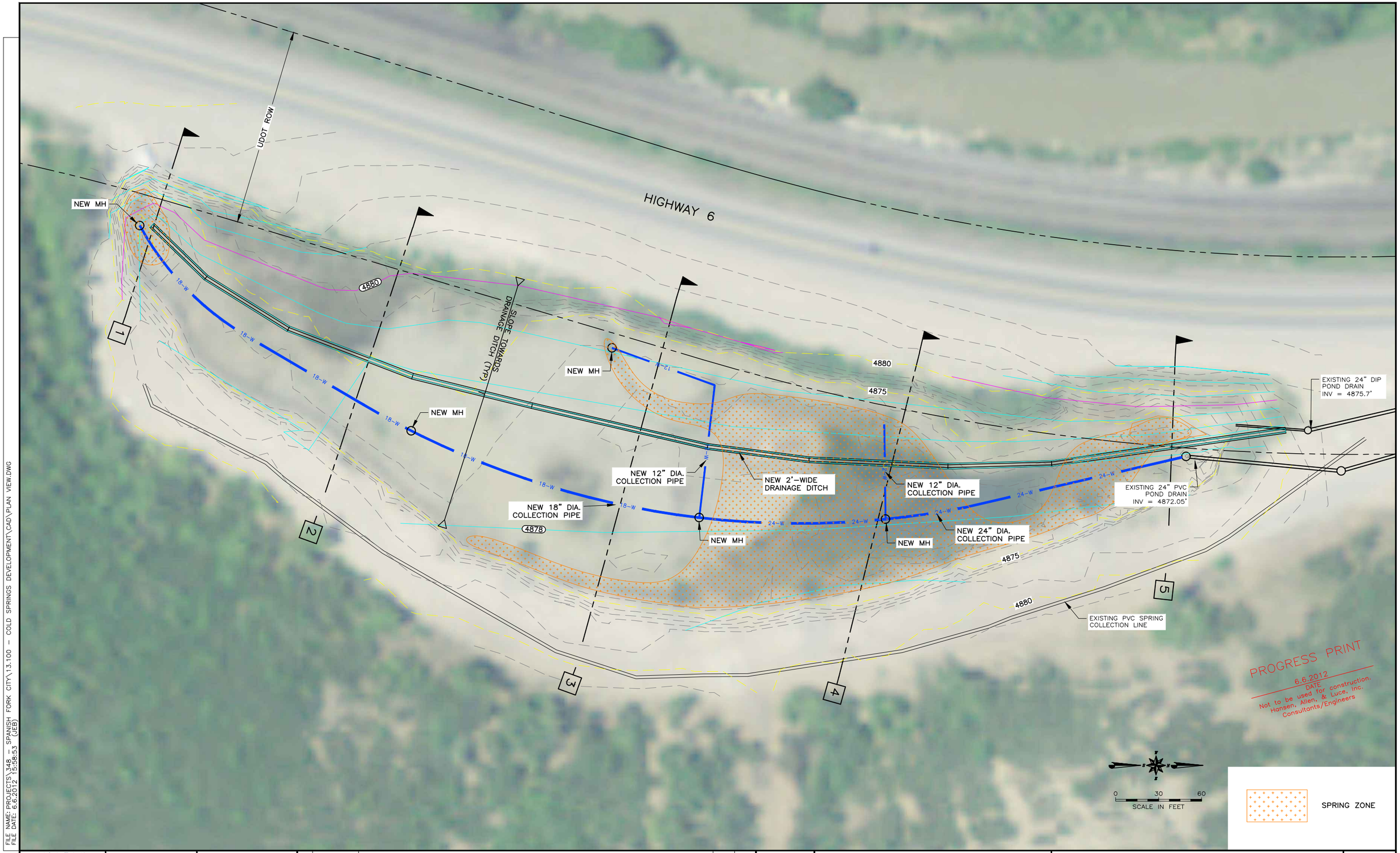

FILE NAME: PROJECTS\348 - SPANISH FORK CITY\13.100 - COLD SPRINGS DEVELOPMENT\CAD\PLAN VIEW.DWG
FILE DATE: 6.6.2012 15:58:53 (JEB)

7/04

HANSEN ALLEN & LUCE INC ENGINEERS

PROJECT ENGINEER

DESIGNED TBT	3					
DRAFTED JEB	2					
CHECKED SCJ	1					
DATE JUNE 2011	NO.	DATE	REVISIONS	BY	APVD.	

SCALE NOT TO SCALE

SPANISH FORK CITY
40 SOUTH MAIN STREET
SPANISH FORK, UTAH 84660

COLD SPRINGS REHABILITATION

PLAN VIEW

SHEET 1

348.01.100

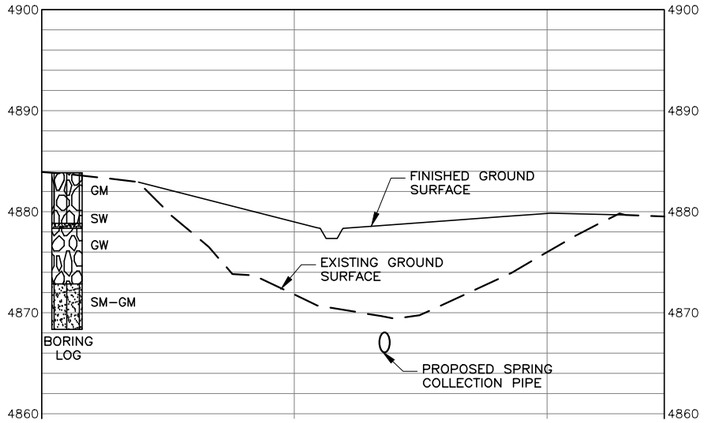

SECTION 1

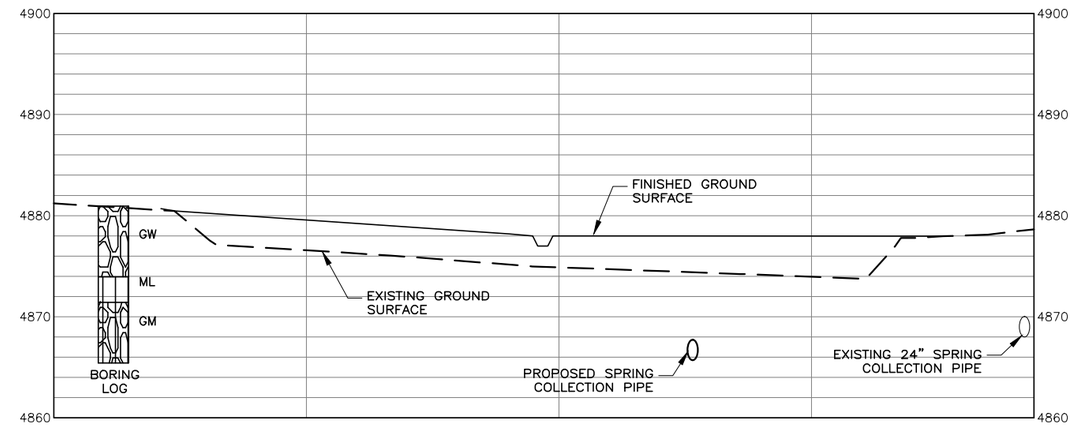

SECTION 2

GM = SILTY GRAVELS, GRAVEL–SAND–SILT MIXTURE
SW = WELL GRADED SANDS AND GRAVELLY SANDS
GW = WELL GRADED GRAVELS AND GRAVEL–SAND MIXTURES
SM = SILTY SANDS, SAND SILT MIXTURES
ML = SILTS, VERY FINE SANDS
CL = CLAY

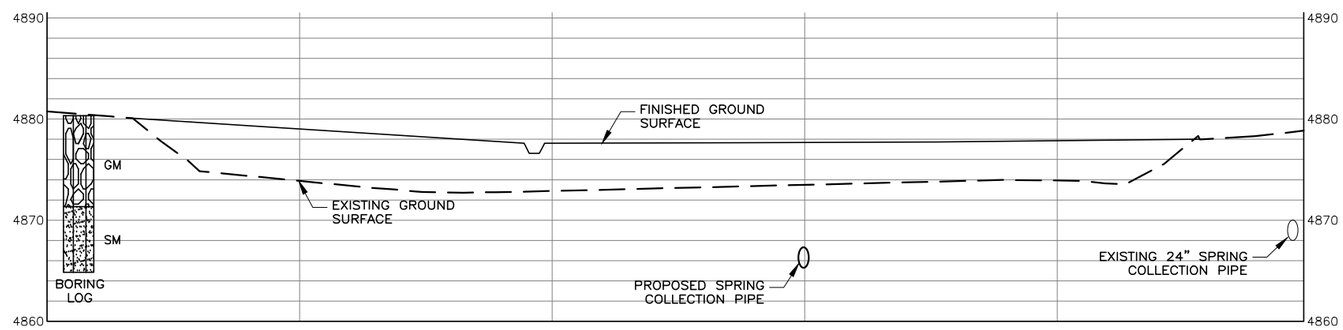

SECTION 3

PROGRESS PRINT
4.30.2012
DATE
Not to be used for construction.
Hansen, Allen, & Luce, Inc.
Consultants/Engineers

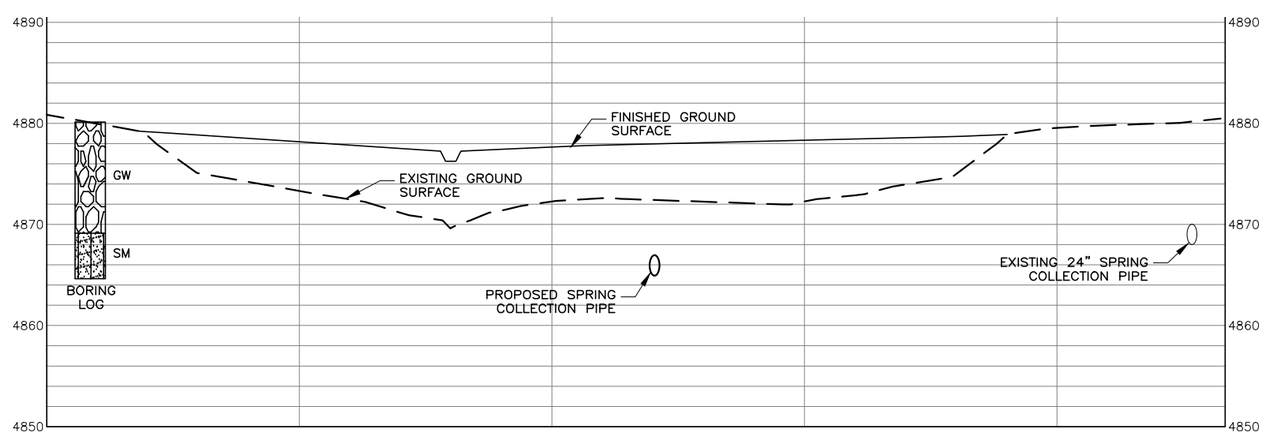

SECTION 4

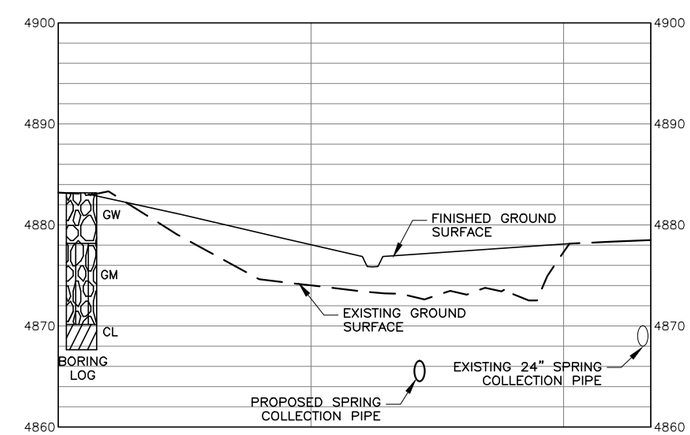

SECTION 5

FILE NAME: PROJECTS\348 — SPANISH FORK CITY\13.100 — COLD SPRINGS DEVELOPMENT\CAD\CROSS SECTIONS.DWG
FILE DATE: 4.30.2012 10:23:17 (JEB)

HANSEN ALLEN & LUCE inc ENGINEERS

PROJECT ENGINEER

DESIGNED	TBT	3		
DRAFTED	JEB	2		
CHECKED	SCJ	1		
DATE	JUNE 2011	NO.	DATE	REVISIONS

BY | APVD.

SCALE: NOT TO SCALE

SPANISH FORK CITY
40 SOUTH MAIN STREET
SPANISH FORK, UTAH 84660

COLD SPRINGS REHABILITATION
CROSS SECTIONS

SHEET 2
348.01.100

7/04

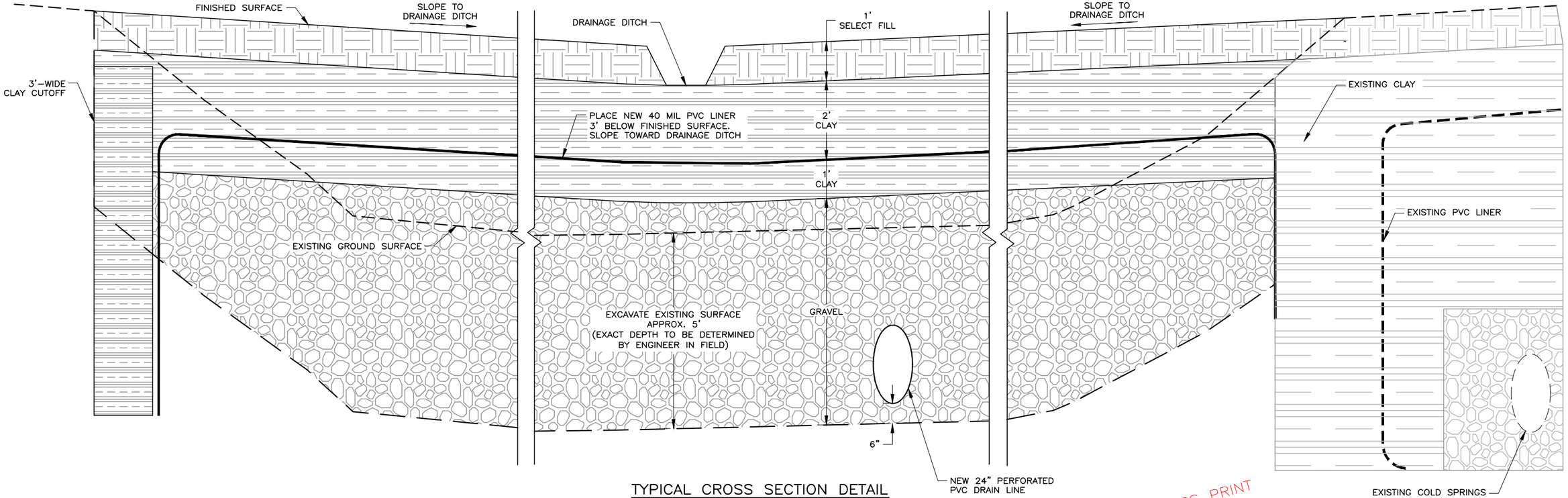

TYPICAL CROSS SECTION DETAIL
N.T.S.

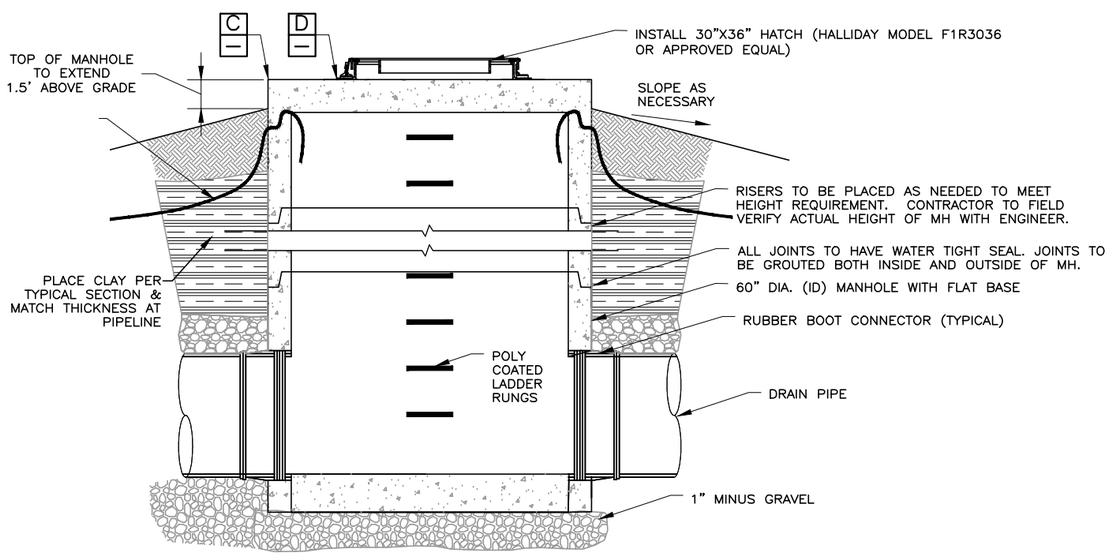

MANHOLE DETAIL B/1
N.T.S.

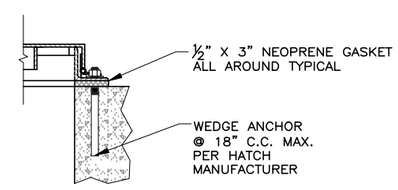

ANCHOR DETAIL D/—
N.T.S.

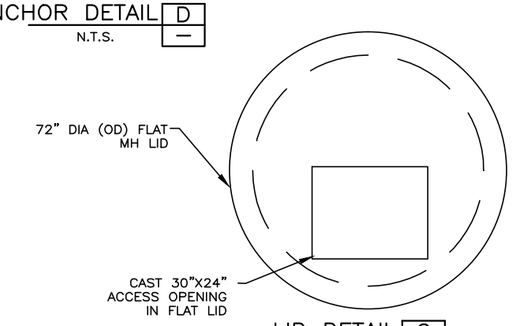

LID DETAIL C/—
N.T.S.

PROGRESS PRINT
4.30.2012
DATE
Not to be used for construction.
Hansen, Allen, & Luce
Consultants/Engineers

NOTES:

1. DIVERT SURFACE WATER AWAY FROM SPRING COLLECTION PIPE.
2. CLAY SHALL BE CLASSIFICATION CL ASTM 2487, HOMOGENEOUS, UNIFORM, AND FREE OF ORGANIC MATTER, FROZEN MATERIAL, DEBRIS, ROCKS AND DELETERIOUS MATERIAL.
3. FILTER FABRIC TO BE 10 OZ NON-WOVEN GEOTEXTILE.
4. CLAY LAYERS TO BE PLACED AT 95% COMPACTION PER ASTM 1557 MODIFIED PROCTOR WITH ±2% OPTIMUM MOISTURE CONTENT
5. SPLICE LINER WITH A MINIMUM LAP OF 2'.
6. PROVIDE SILT FENCE ALONG BANK OF POND A MAXIMUM OF 4' FROM LIMITS OF DISTURBANCE.
7. PIPE AND ALL OTHER MATERIALS THAT WILL BE IN CONTACT WITH DRINKING WATER TO BE NSF 61 APPROVED.
8. PIPE TO BE PVC C-905 DR 25 PIPE, WITH BELL AND SPIGOT.

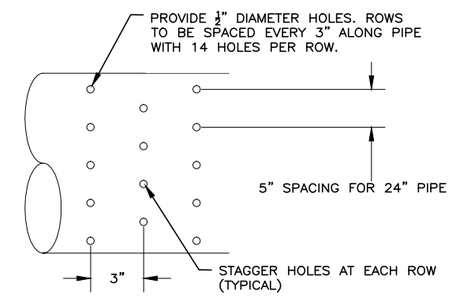

PIPE DETAIL A/—
N.T.S.

FILE NAME: PROJECTS\348 - SPANISH FORK CITY\13.100 - COLD SPRINGS DEVELOPMENT\CAD\DETAILS.DWG
FILE DATE: 4.30.2012 13:22:03 (JEB)

7/04

HANSEN ALLEN & LUCE inc ENGINEERS

PROJECT ENGINEER	DESIGNED TBT	3			
	DRAFTED JEB	2			
	CHECKED SCJ	1			
	DATE APRIL 2012	NO.	DATE	REVISIONS	BY / APVD.

SCALE: NOT TO SCALE

SPANISH FORK CITY
40 SOUTH MAIN STREET
SPANISH FORK, UTAH 84660

COLD SPRINGS REHABILITATION
DETAILS

SHEET 3
348.01.100